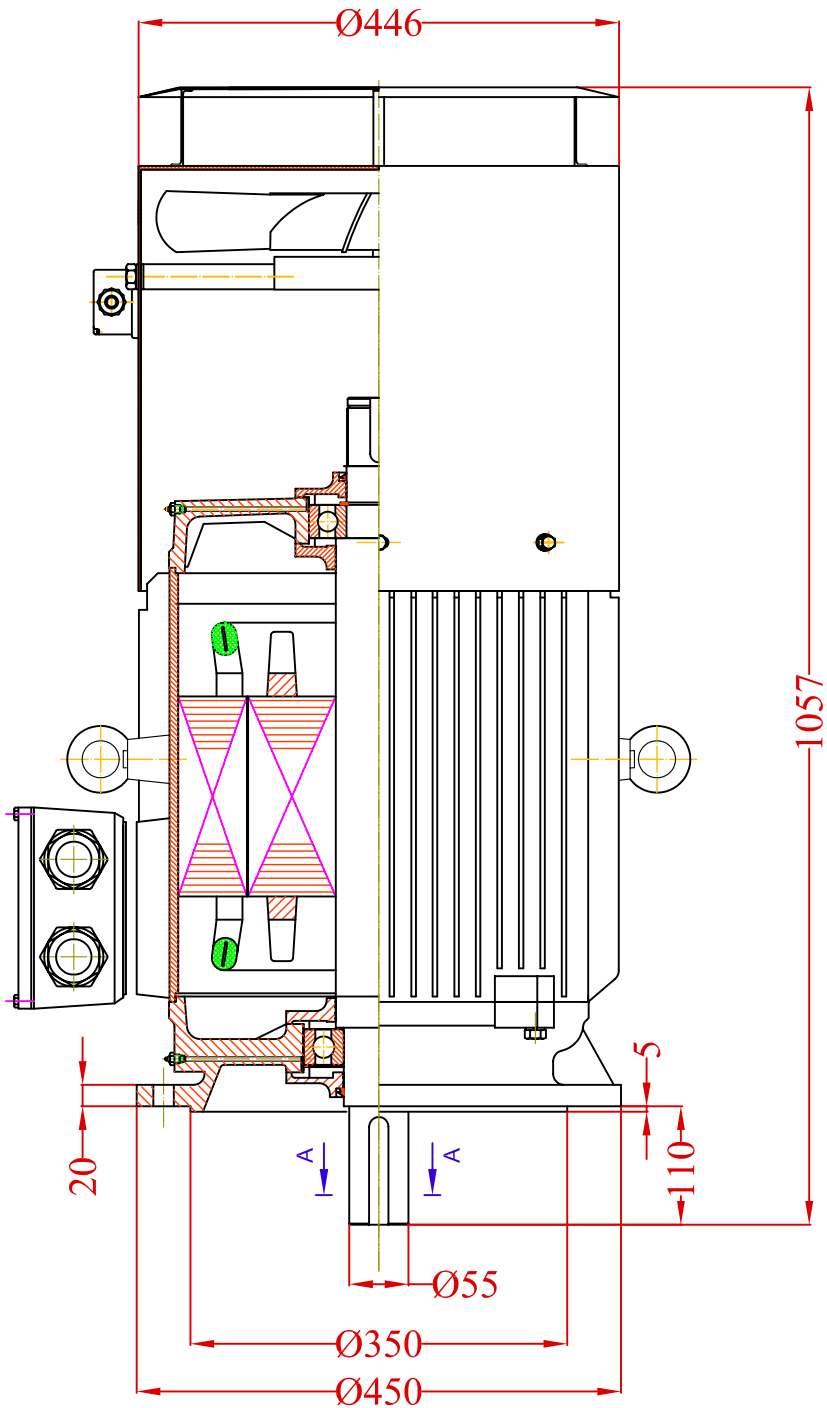

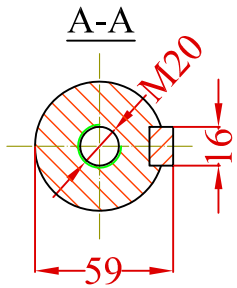

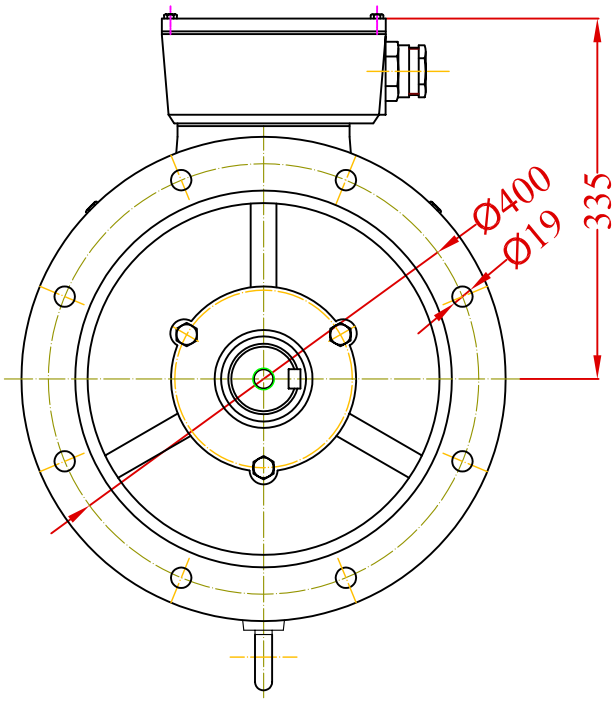

			Designed by	Date	Signature	VALIADIS HELLENIC MOTORS
			Checked by			Weight
			Examine by			
			SCALE	MOTOR TYPE K225 M-2 MOUNTING V1 WITH FORCED COOLING KIT		Desing Number
						Replaced from
CHANGE	DATE	NAME				Replace the