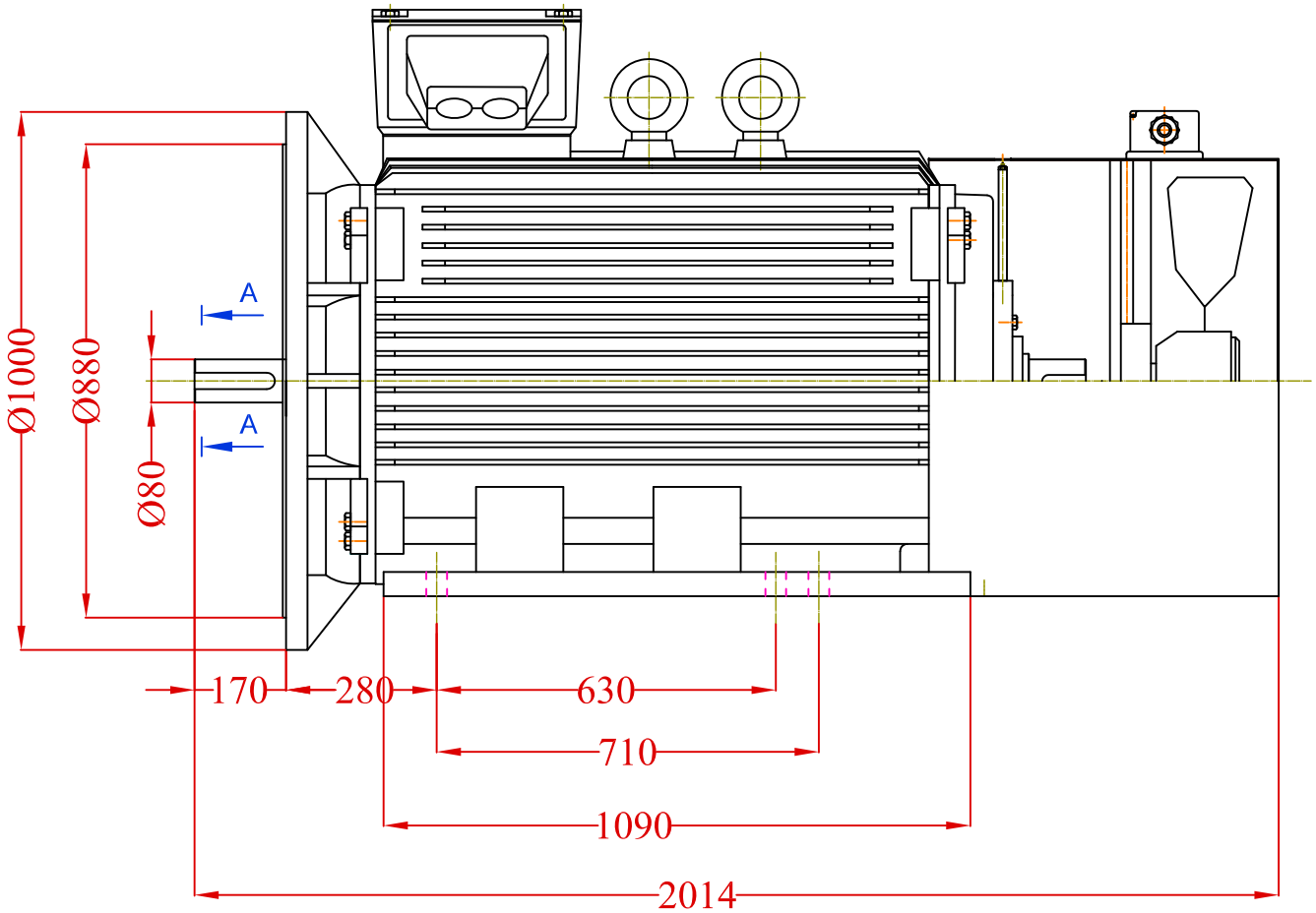


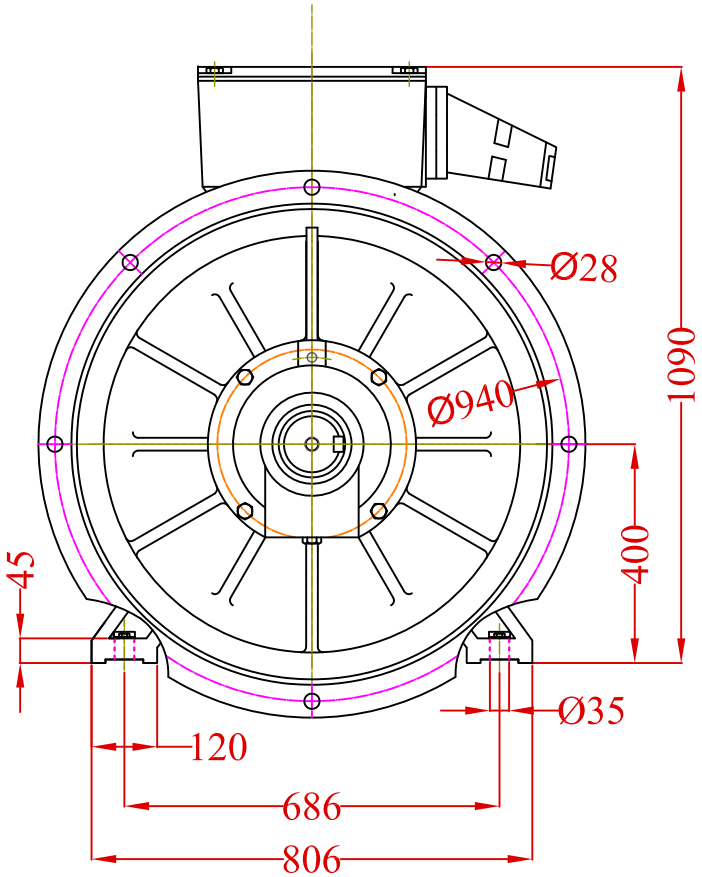


A-A

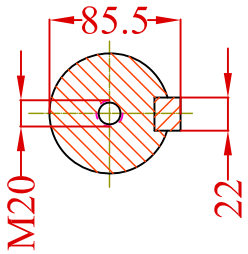


| | | | | | | | |
|---|---|---|---|---|---|---|---|
| | | | | Date | Signature | | VALIADIS<br>HELLENIC MOTORS |
| | | | Designed by | | | Weight | |
| | | | Checked by | | | | |
| | | | Examine by | | | | |
| | | | SCALE | MOTOR TYPE K 400-2<br>MOUNTING B35<br>WITH FORCED COOLING KIT | | | Design Number |
| | | | | | | | Replaced from |
| CHANGE | DATE | NAME | | | | | Replace the |