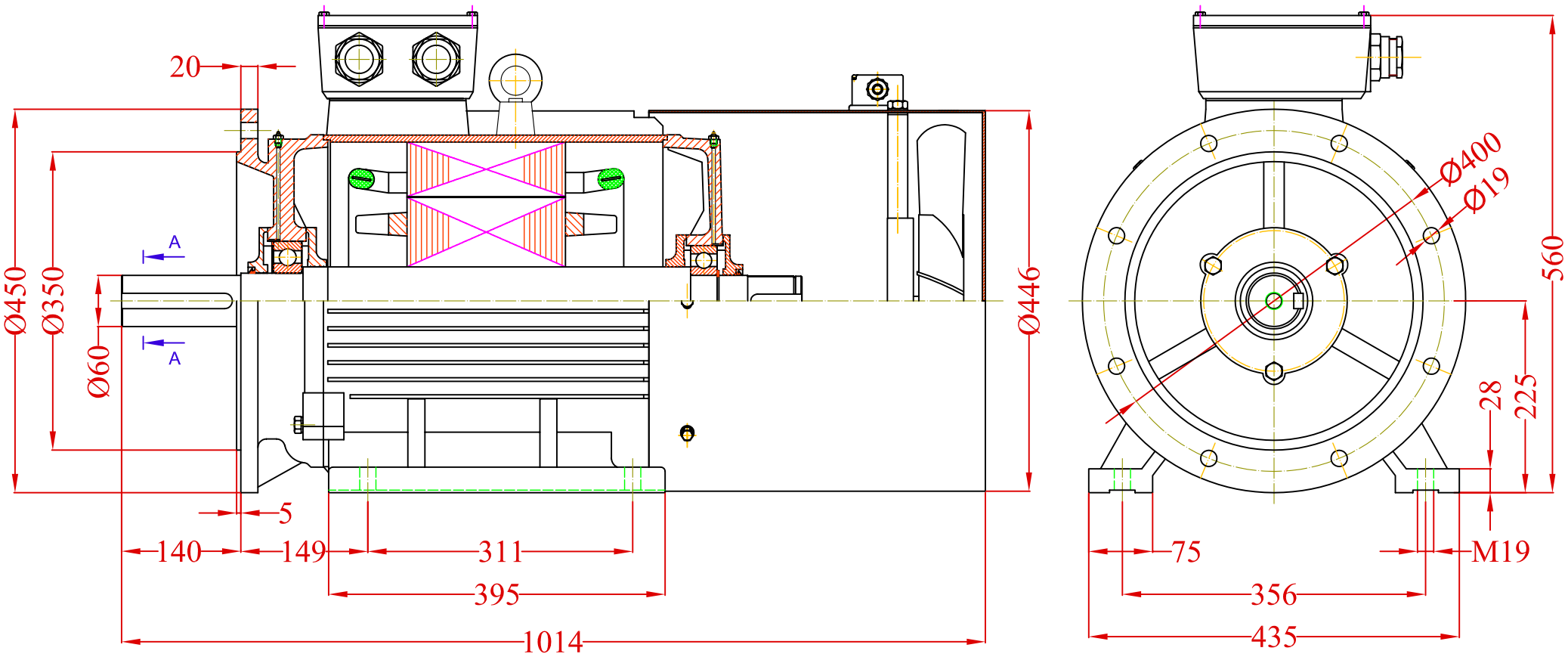

A-A

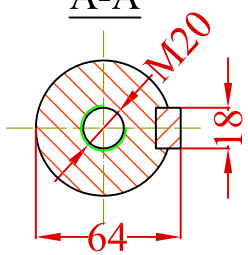

				Date	Signature	
			Designed by			Weight
			Checked by			
			Examine by			
			SCALE			
CHANGE	DATE	NAME				

VALIADIS
HELLENIC MOTORS

MOTOR TYPE K225M-4-6-8
MOUNTING B35
WITH FORCED COOLING KIT

Desing Number

Replaced from

Replace the