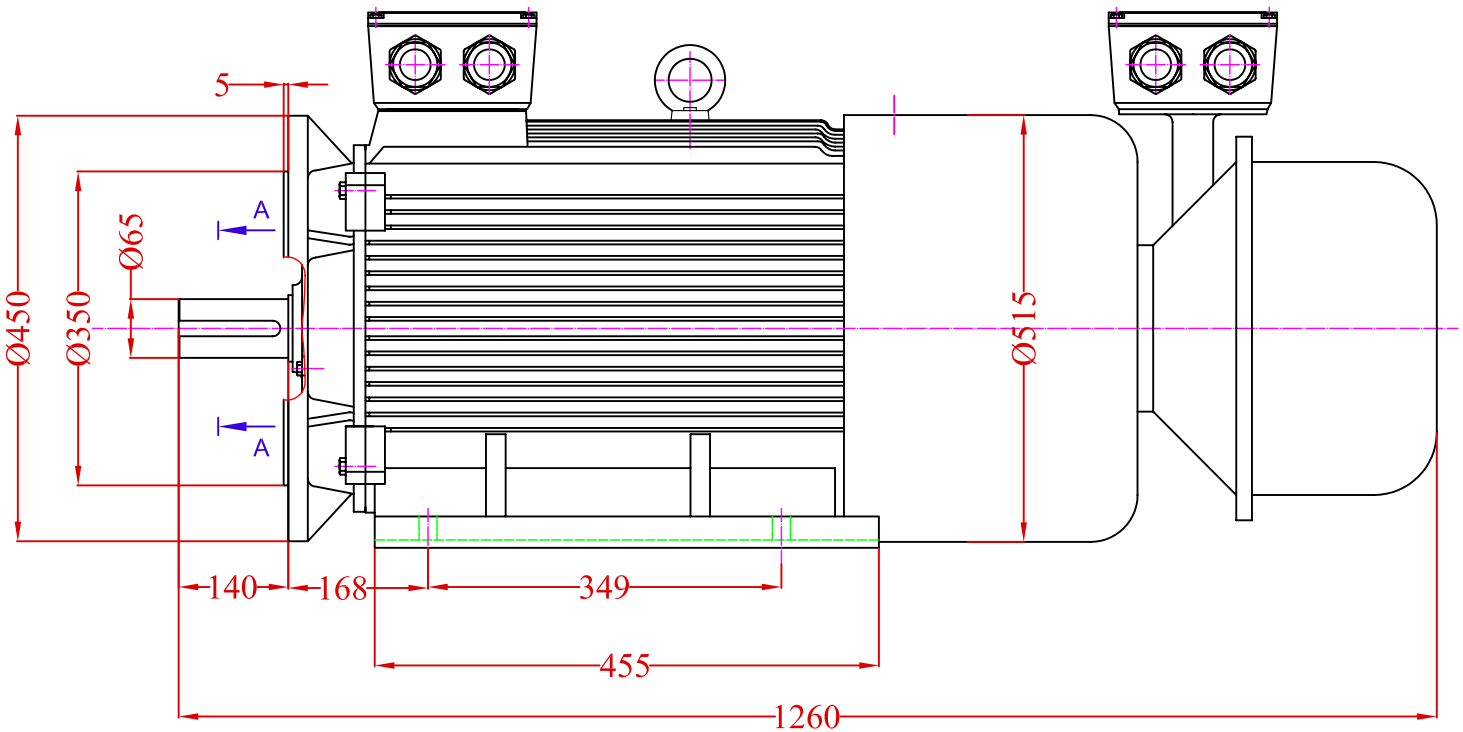

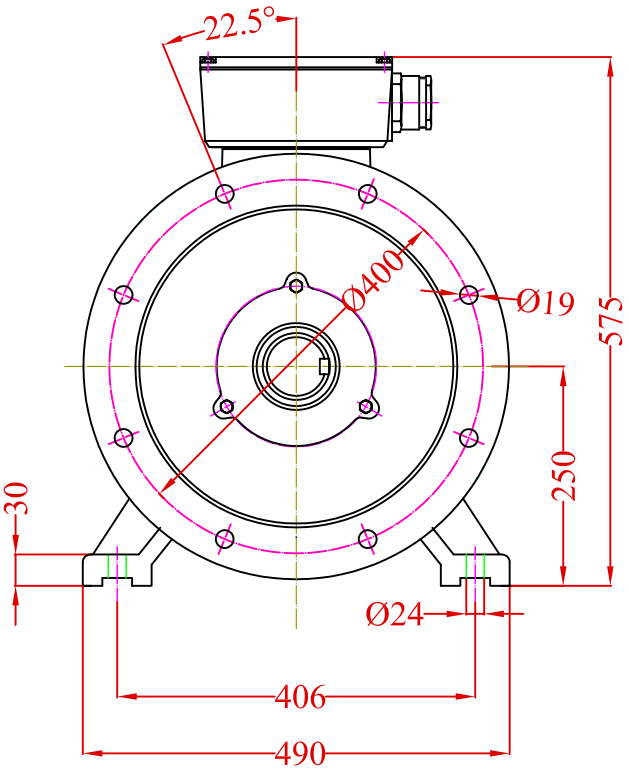

A-A
2:1

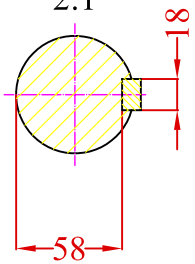

				Date	Signature	
			Designed by			
			Checked by			Weight
			Examine by			
			SCALE			
CHANGE	DATE	NAME				

VALIADIS
HELLENIC MOTORS

Motor Type : KΔ 250M
Mounting : B35
SLIP RING

Customer :

Replaced from

Replace the