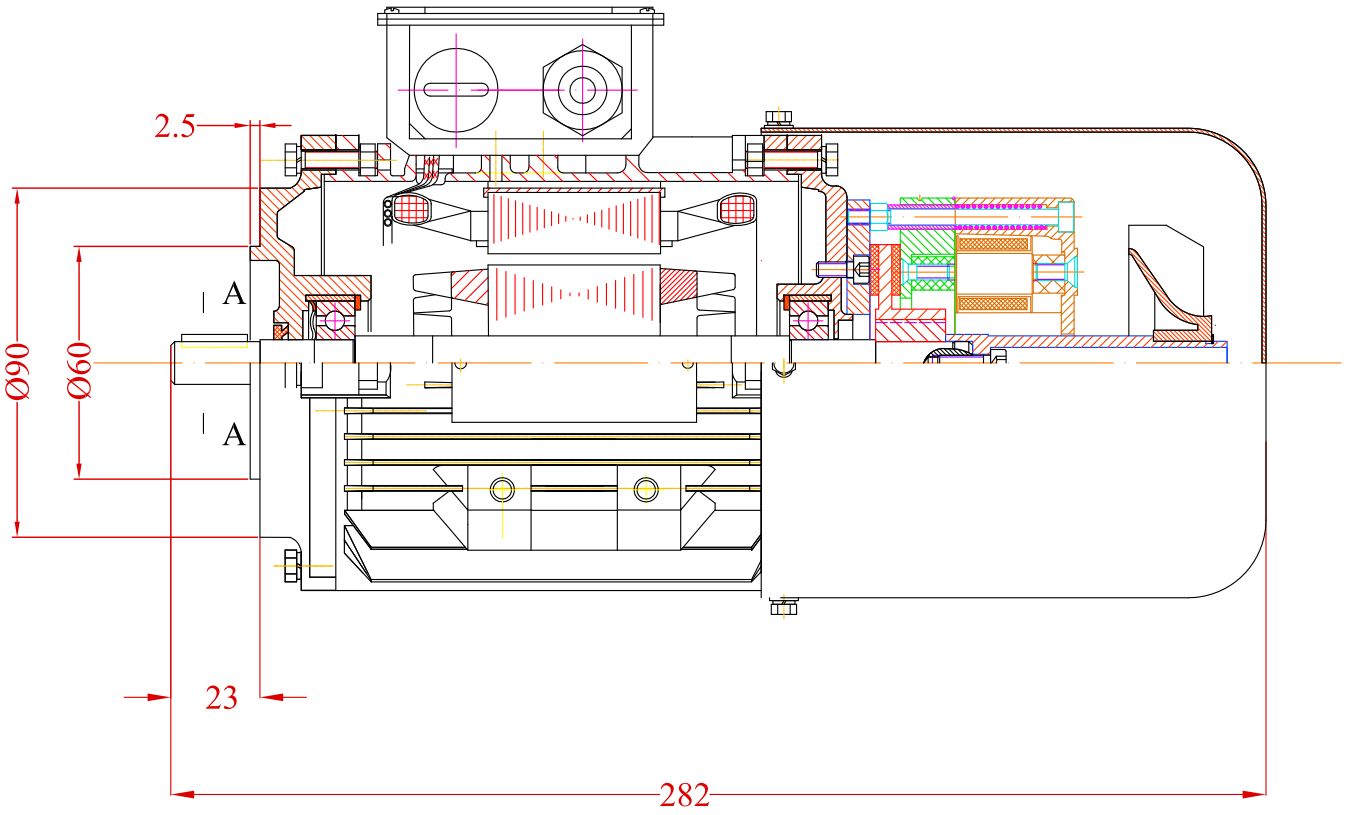

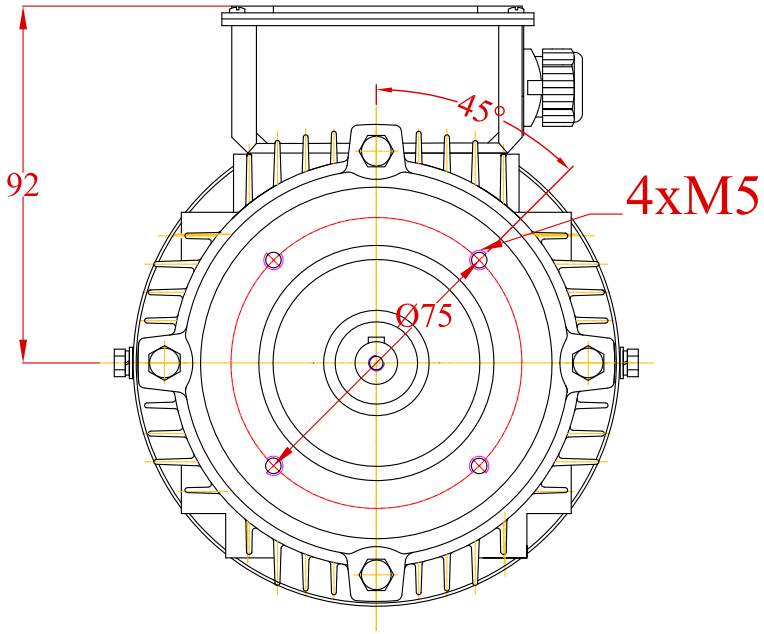

A-A
2:1

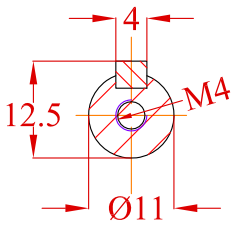

				Date	Signature		
			Designed by				VALIADIS HELLENIC MOTORS
			Checked by			Weight	
			Examine by				
			SCALE	Motor Type : AK63 Mounting : B14A with brake AC1			Design Number
							Replaced from
CHANGE	DATE	NAME					Replace the