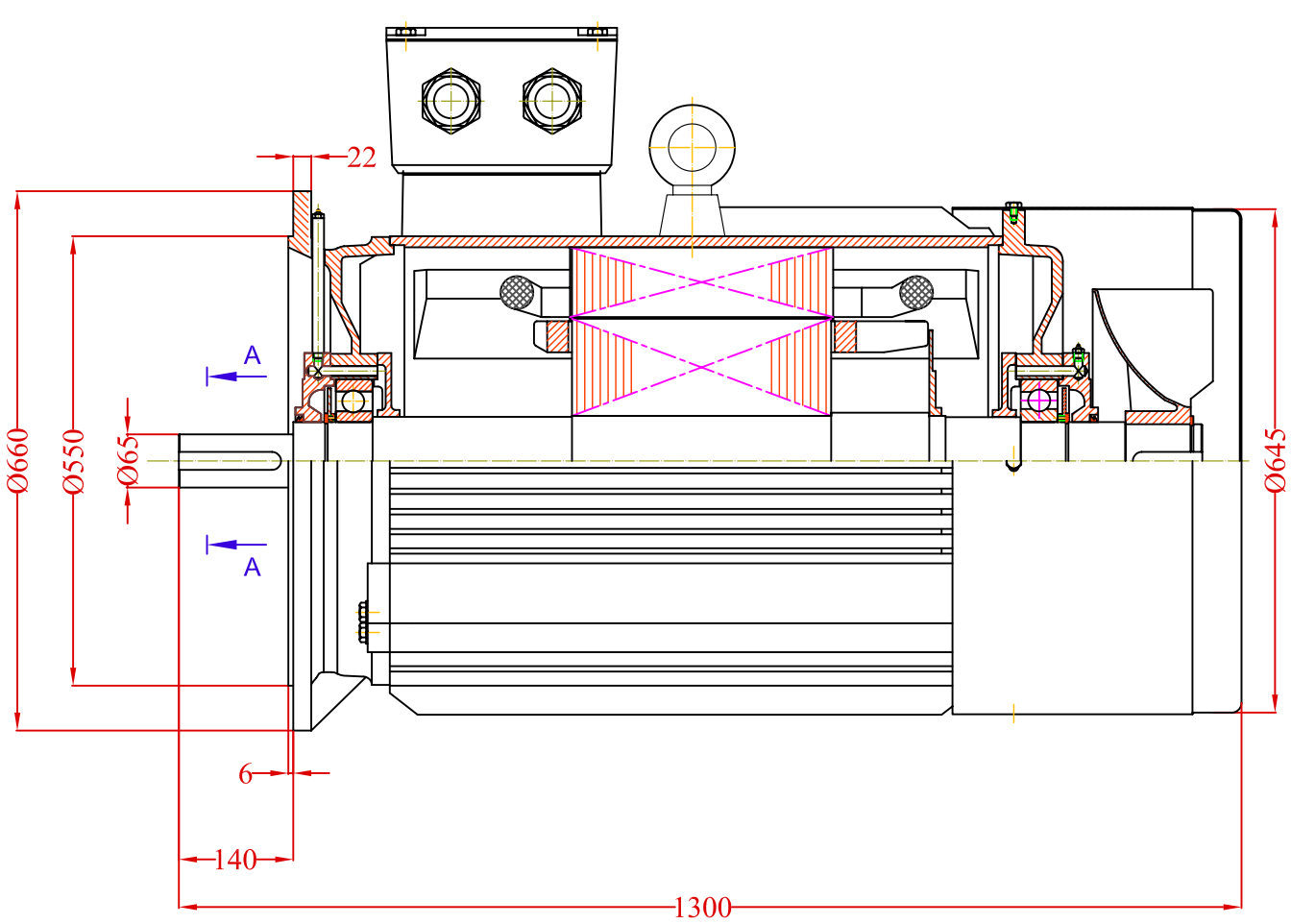

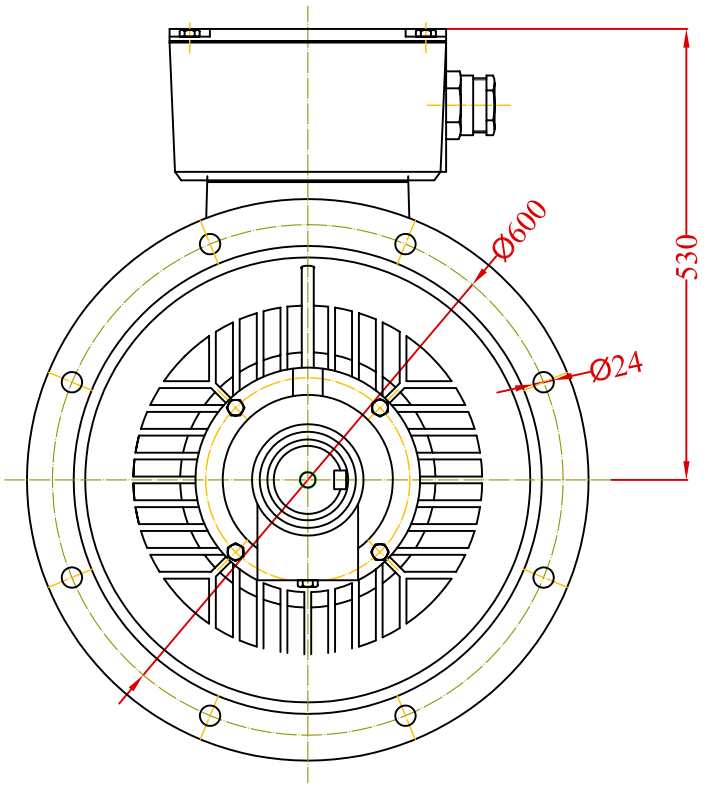

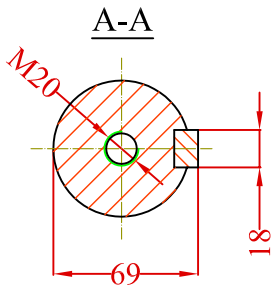

				Date	Signature		VALIADIS
			Designed by				HELLENIC MOTORS
			Checked by			Weight	
			Examine by				
			SCALE	MOTOR TYPE K315L-2 MOUNTING B5			Design Number
							Replaced from
CHANGE	DATE	NAME					Replace the