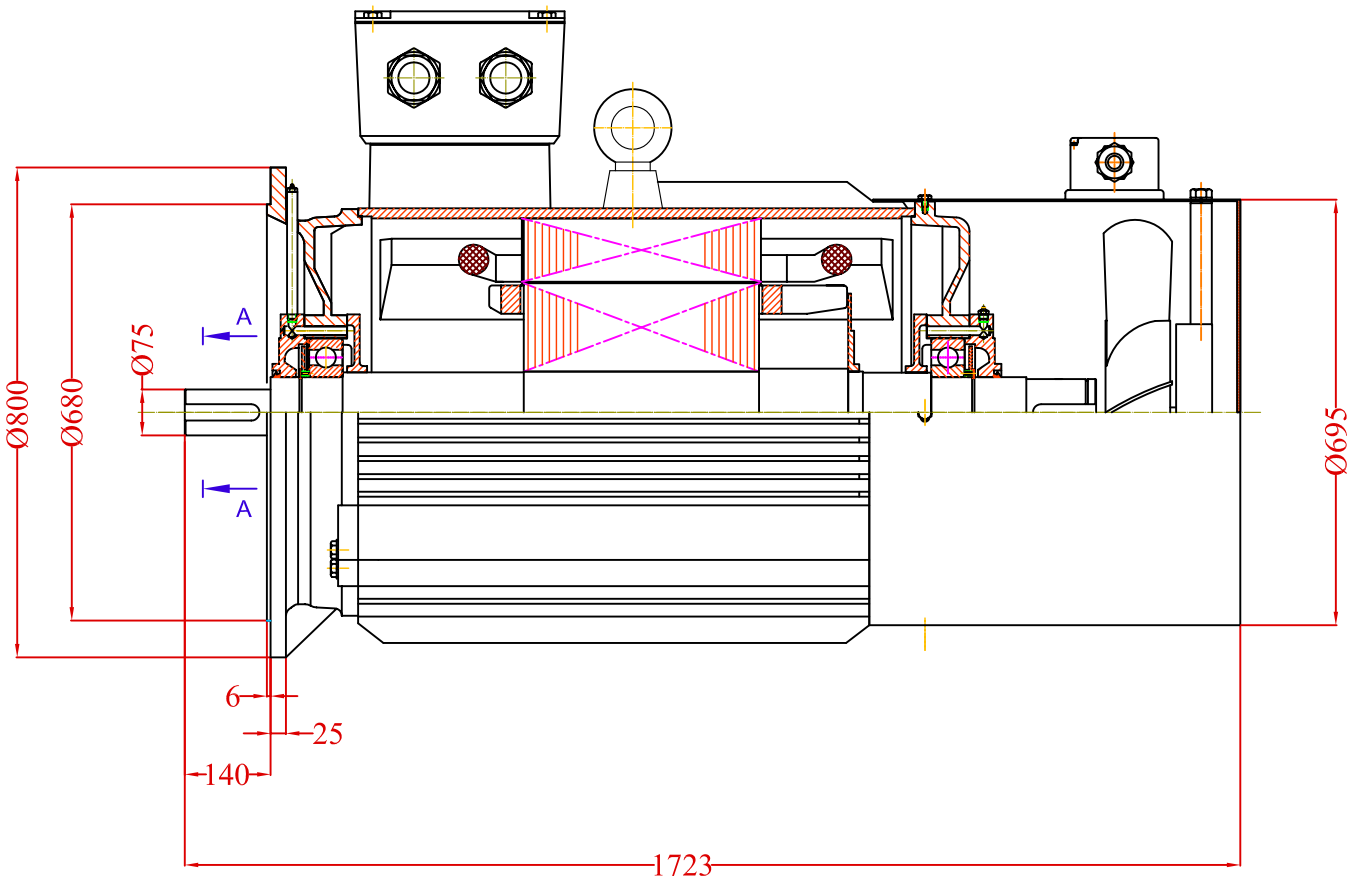

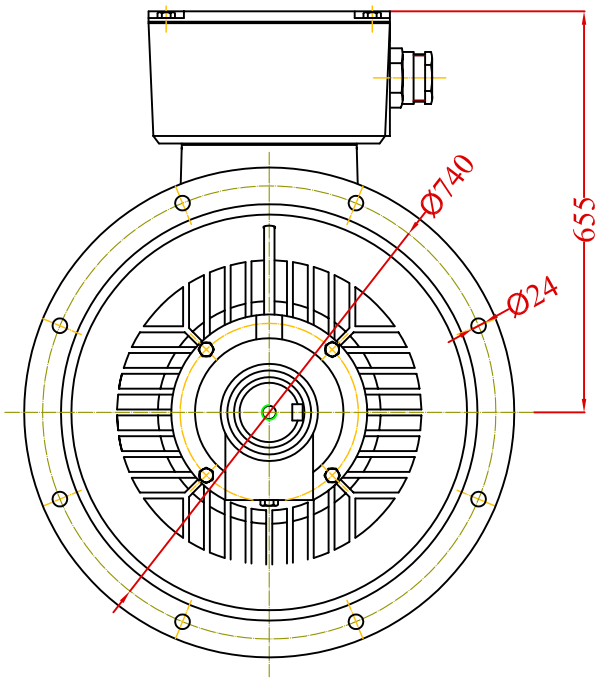

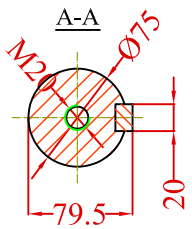

CHANGE	DATE	NAME

	Date	Signature	
Designed by			Weight
Checked by			
Examine by			
SCALE			

VALIADIS
HELLENIC MOTORS

MOTOR TYPE K355L-2
MOUNTING B5
WITH FORCED COOLING KIT

Desing Number

Replaced from

Replace the