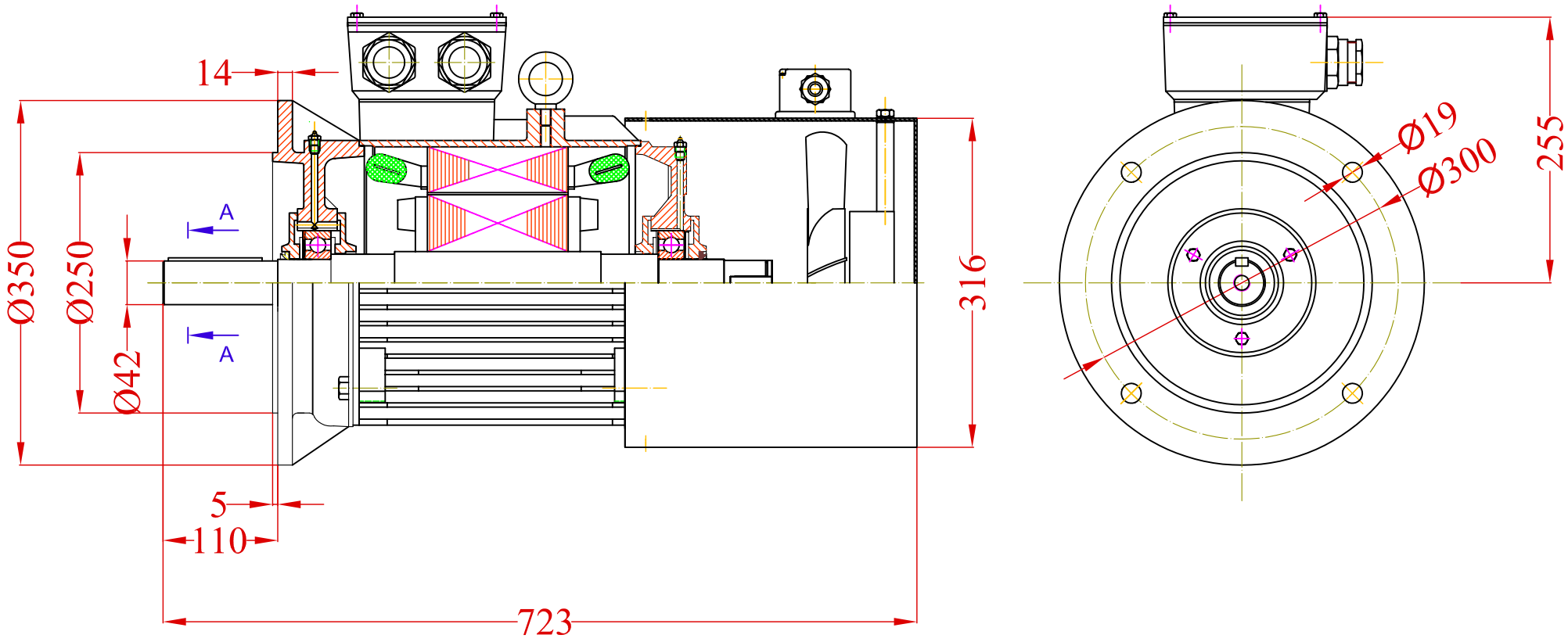

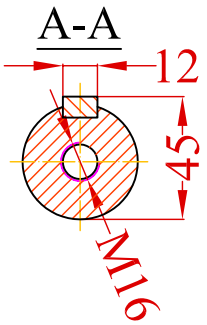

			Designed by	Date	Signature	VALIADIS HELLENIC MOTORS
			Checked by			Weight
			Examine by			
			SCALE	MOTOR TYPE K160M MOUNTING B5 WITH FORCED COOLING KIT		Desing Number
						Replaced from
CHANGE	DATE	NAME				Replace the