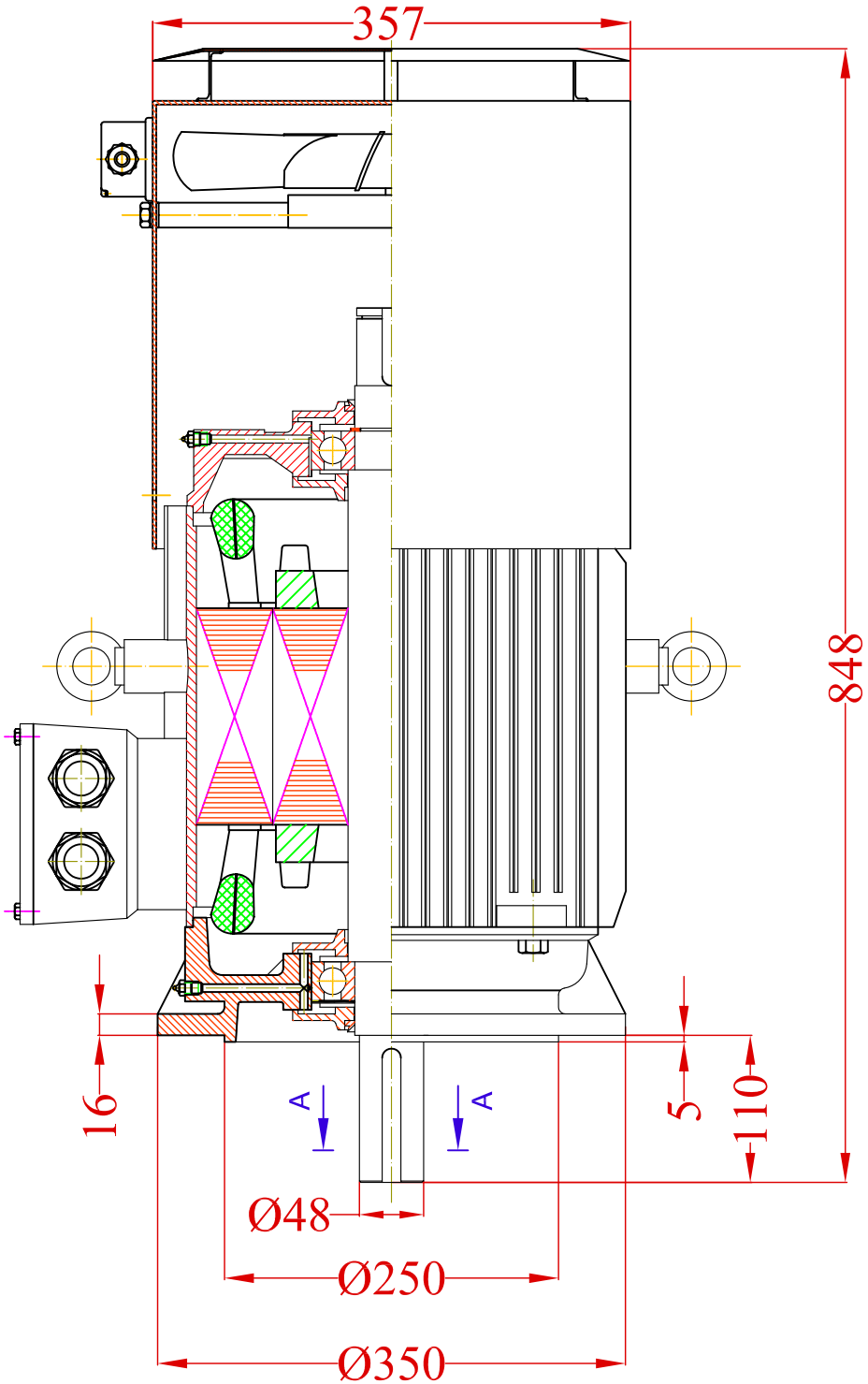

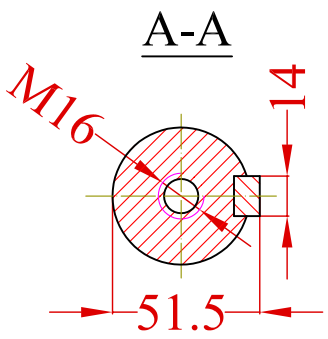

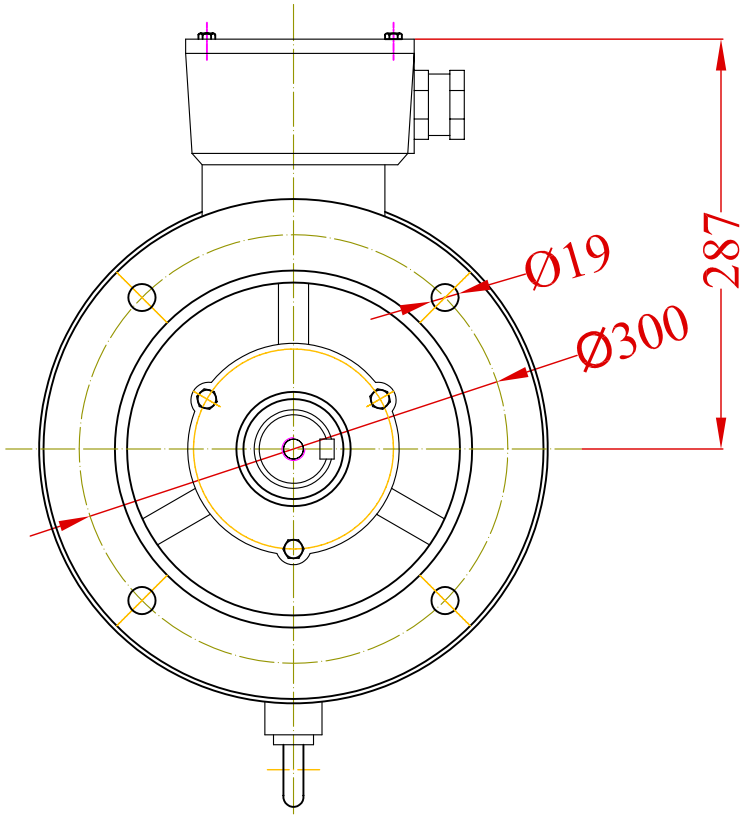

			Designed by	Date	Signature	VALIADIS HELLENIC MOTORS
			Checked by			Weight
			Examine by			
			SCALE	MOTOR TYPE K180M MOUNTING V1 WITH FORCED COOLING KIT		Desing Number
						Replaced from
CHANGE	DATE	NAME				Replace the