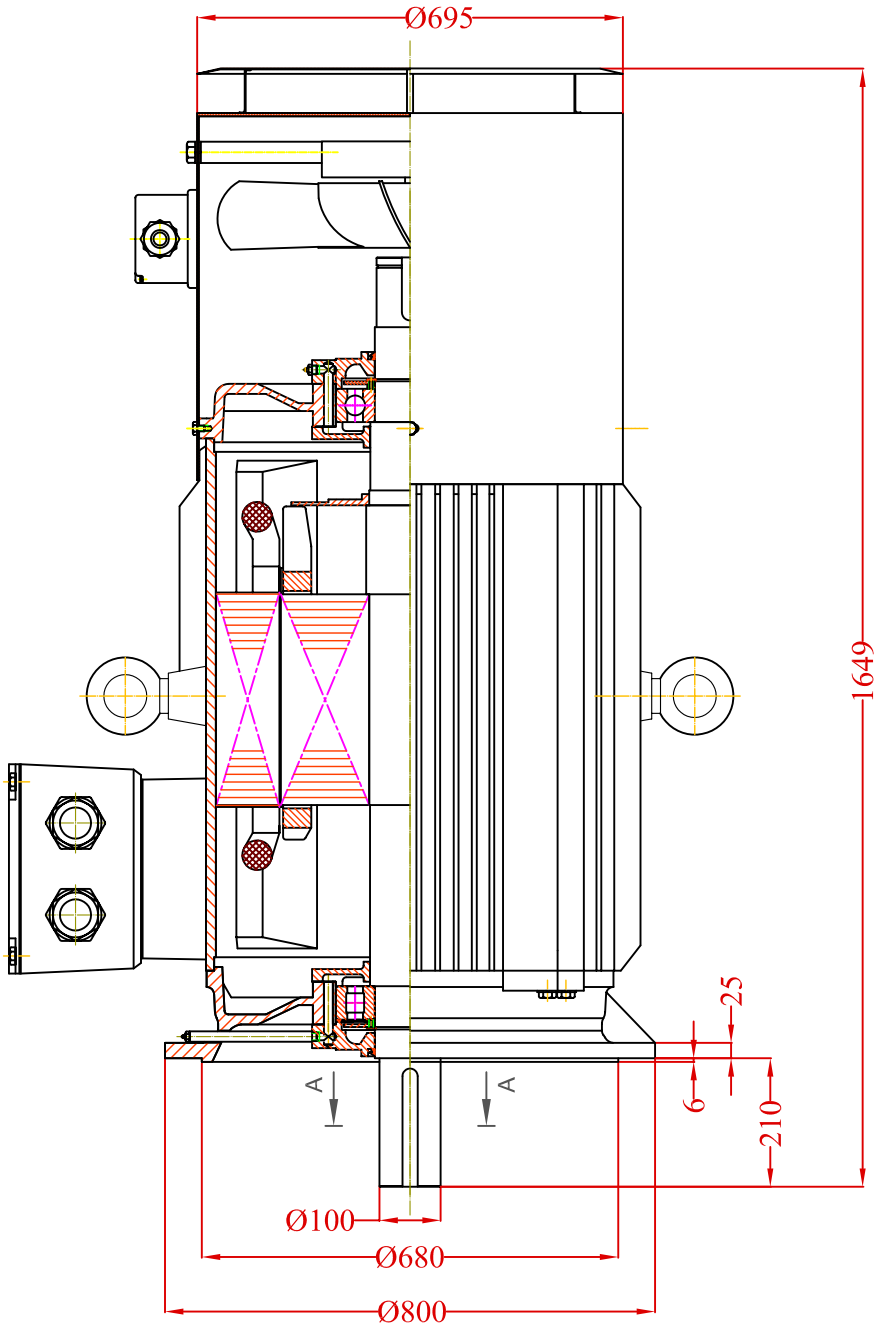

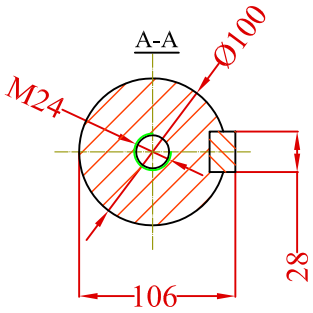

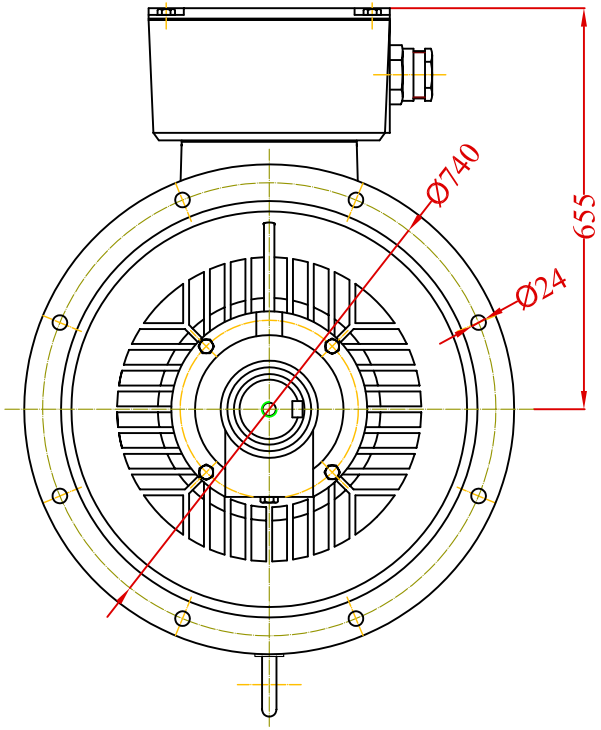

				Date	Signature		VALIADIS HELLENIC MOTORS
			Designed by			Weight	
			Checked by				
			Examine by				
			SCALE	MOTOR TYPE K355L-4-6-8 MOUNTING V1 WITH FORCED COOLING KIT			Design Number
							Replaced from
CHANGE	DATE	NAME					Replace the