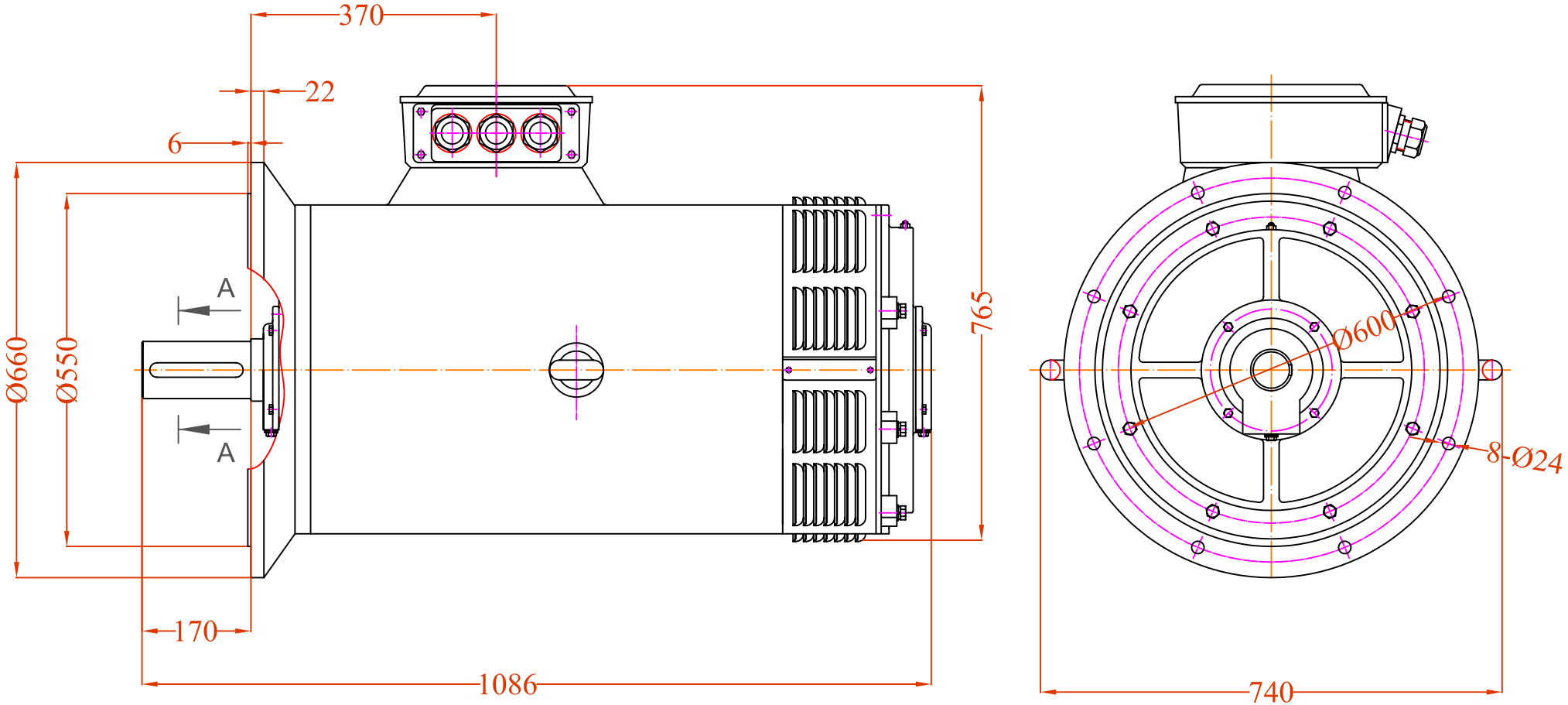

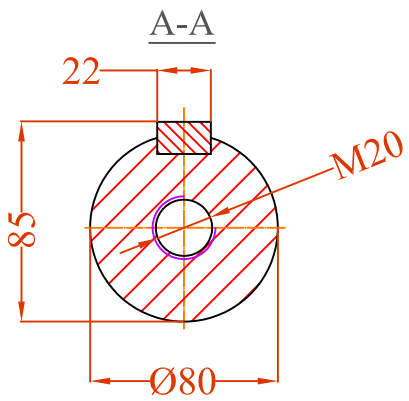

				Date	Signature	
			Designed by			
			Checked by			Weight
			Examine by			
			SCALE			
CHANGE	DATE	NAME				

VALIADIS
HELLENIC MOTORS

Motor Type :AB-D 280-4-6-8
Mounting : V1

Design Number

Replaced from

Replace the