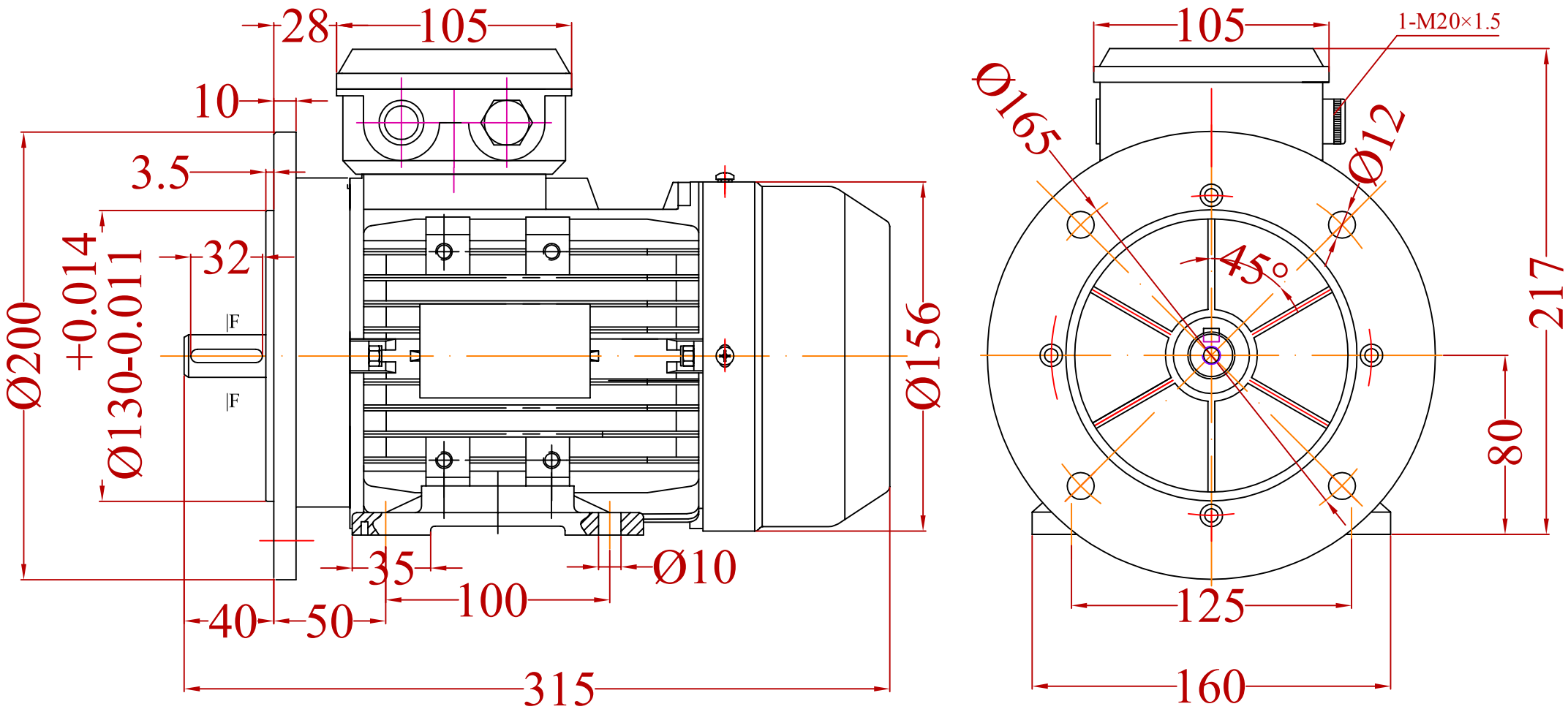

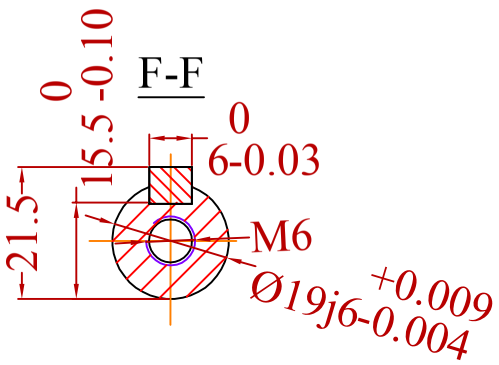

Change	Date	Name

	Date	Signature
Designed by	21/12/18	St.Karageorgis
Checked by		
Examine by		

VALIADIS
HELLENIC MOTORS

SCALE
1:2.5

Motor Type :AK80
Mounting :B35

Design Number :
MTAKFR-181221-5-3

Replaced from

Replace the