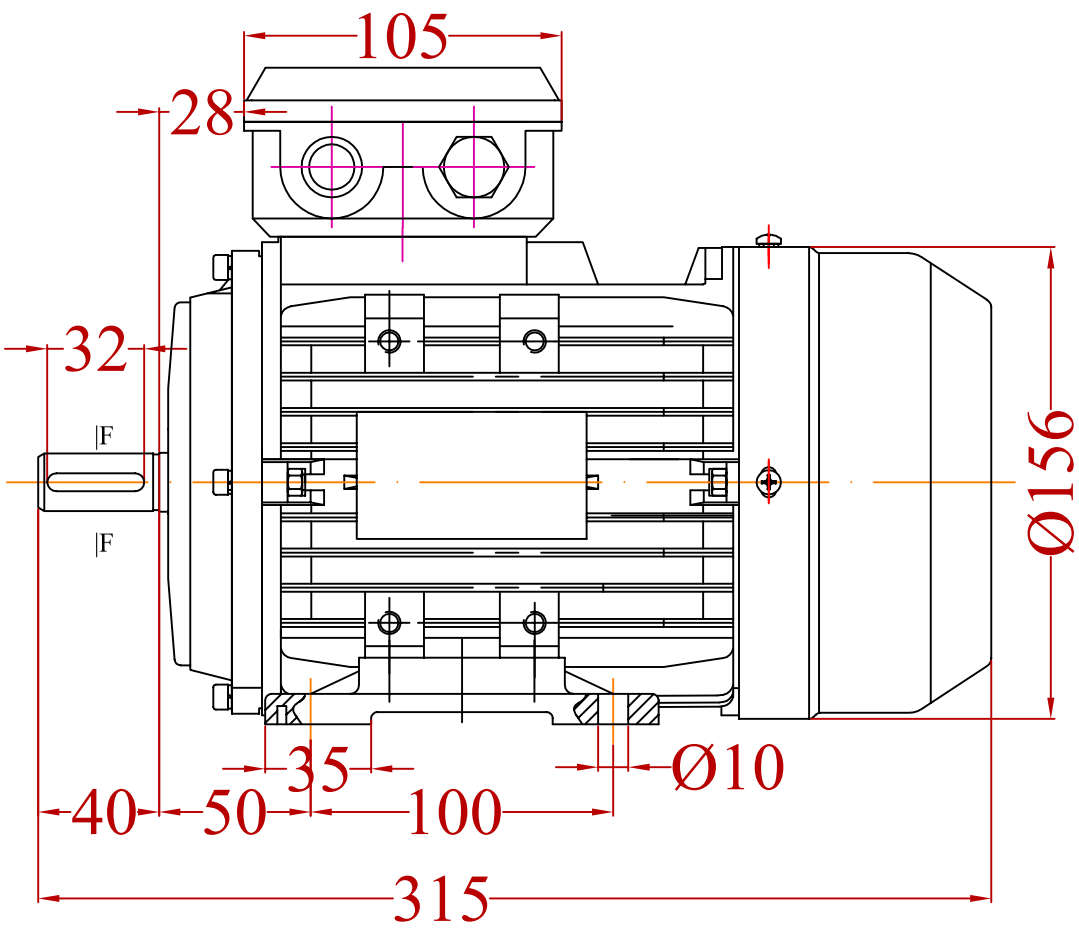

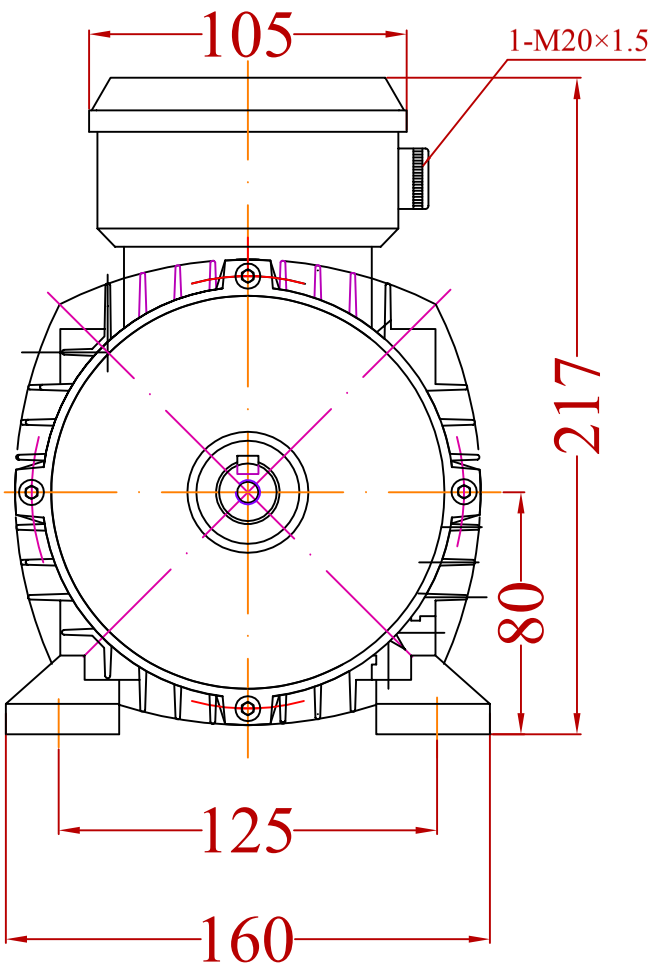

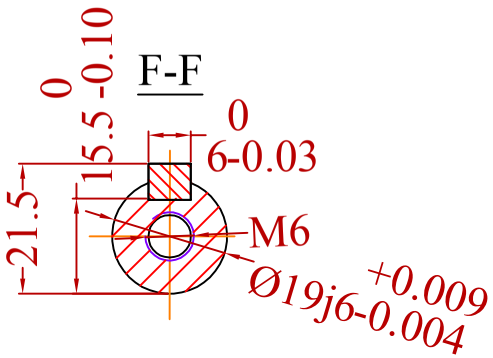

				Date	Signature
			Designed by	21/12/18	St.Karageorgis
			Checked by		
			Examine by		
Change	Date	Name			

VALIADIS
HELLENIC MOTORS

SCALE
1:2.5

Motor Type :AK80
Mounting :B3

Design Number :
MTAKFR-181221-5

Replaced from

Replace the