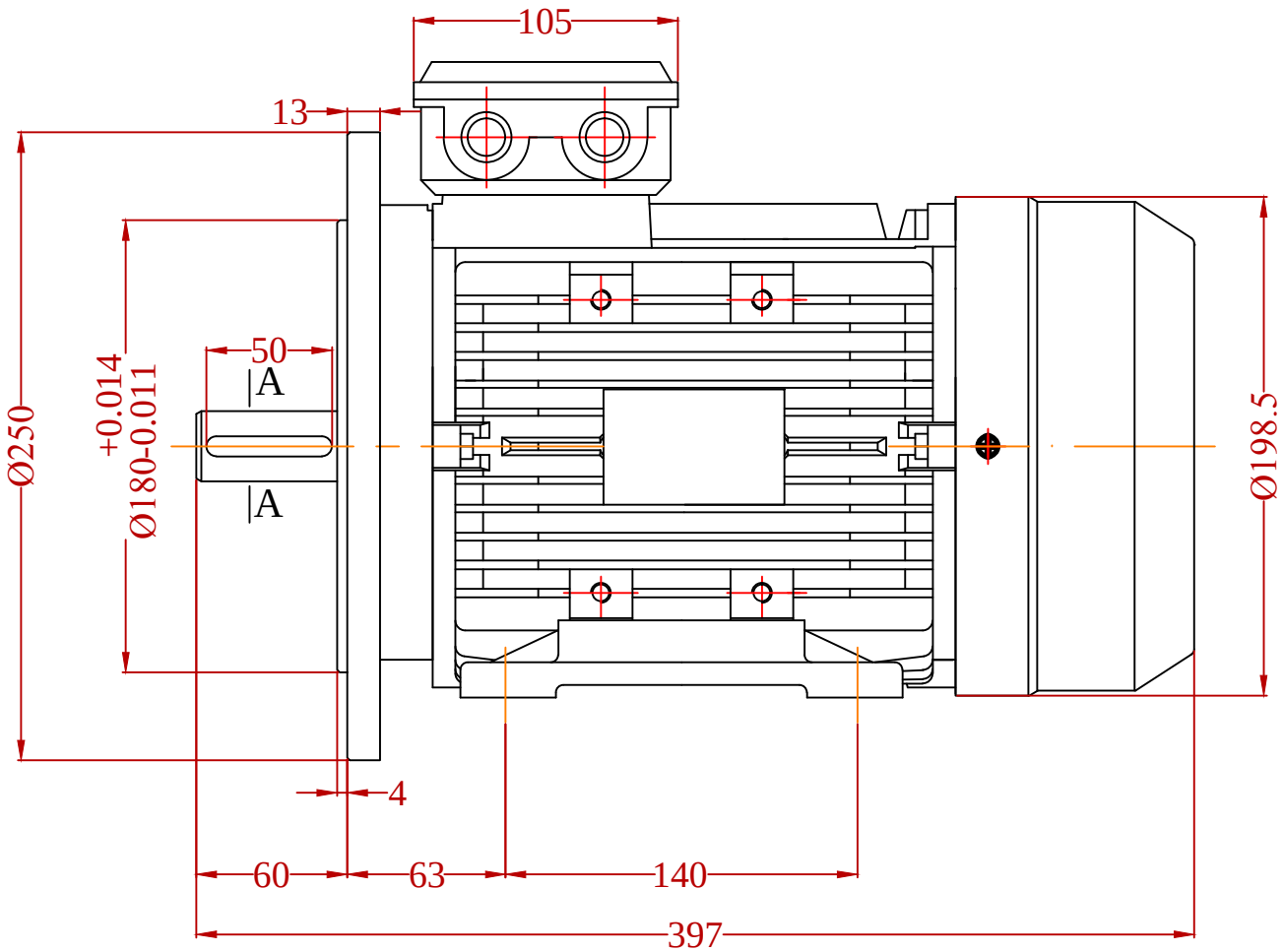

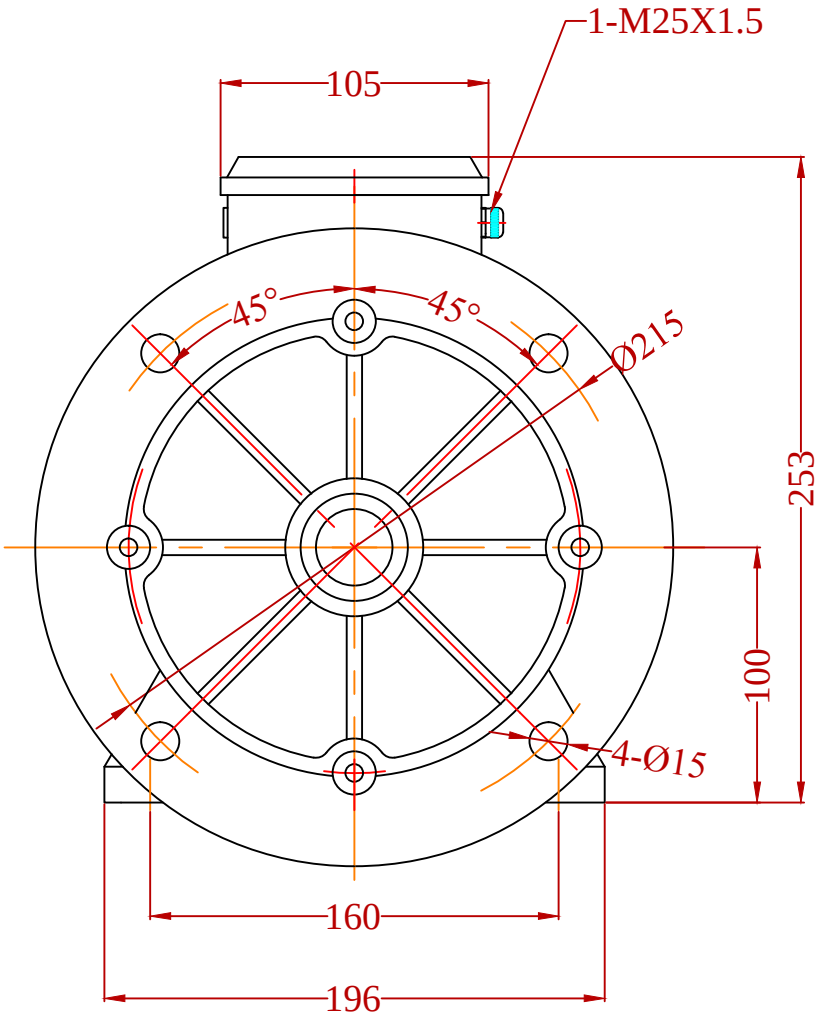

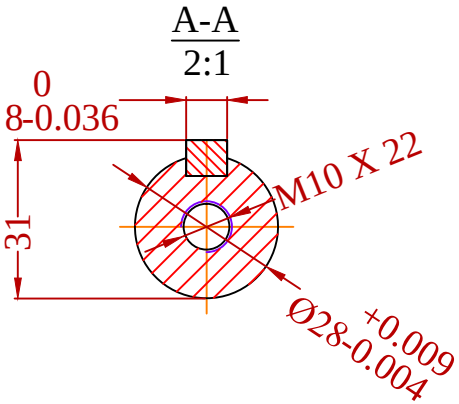

Change	Date	Name

	Date	Signature
Designed by	24/11/17	St.Karageorgis
Checked by		
Examine by		

SCALE 1:3

Motor Type :AK100L
Mounting :B35

VALIADIS
HELLENIC MOTORS

Design Number :
MTAK-171124-17

Replaced from

Replace the