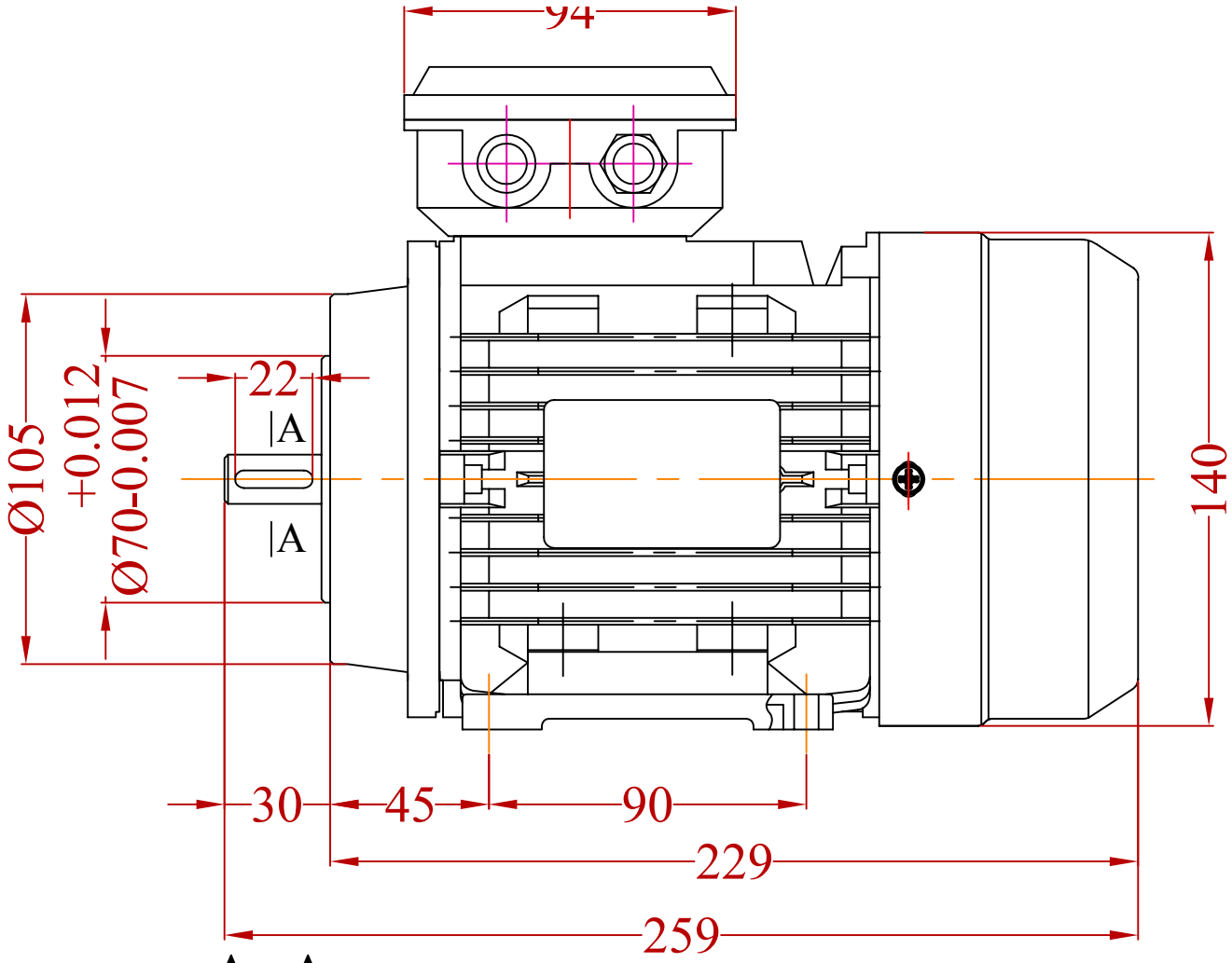

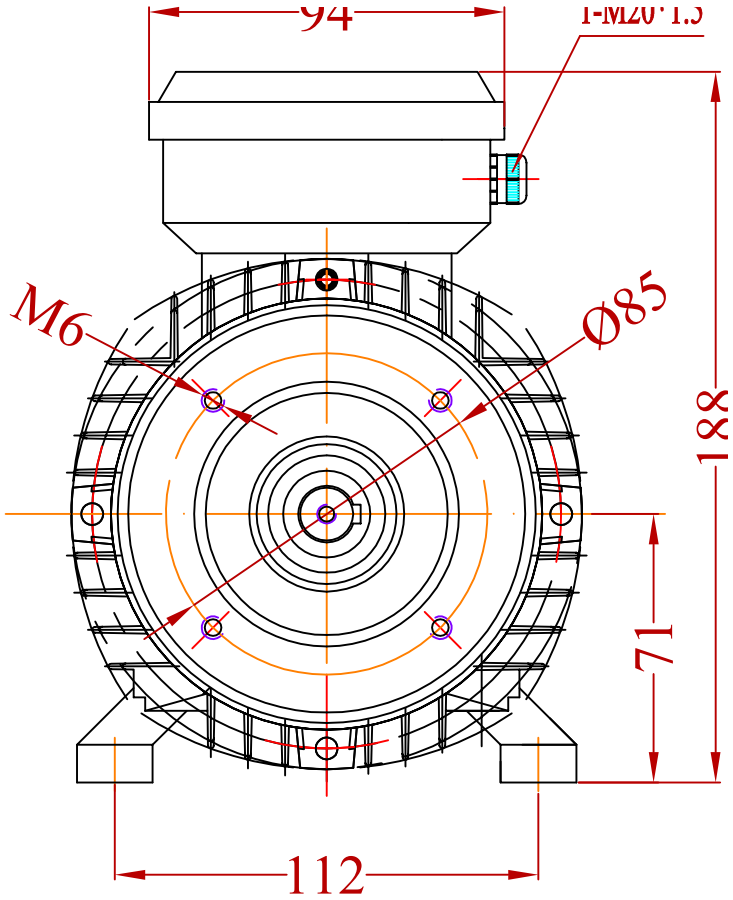

A-A

2:1

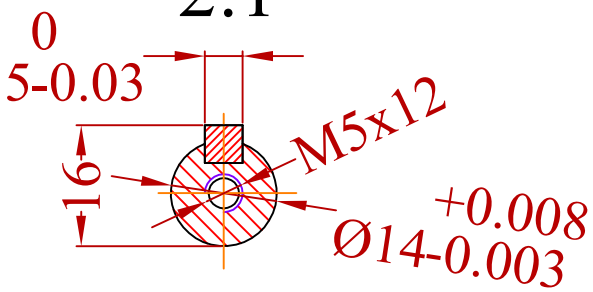

Change	Date	Name

	Date	Signature
Designed by	25/11/17	St.Karageorgis
Checked by		
Examine by		

VALIADIS
HELLENIC MOTORS

SCALE
1:2

Motor Type :AK71
Mounting :B34A

Design Number :
MTAK-171125-2

Replaced from

Replace the