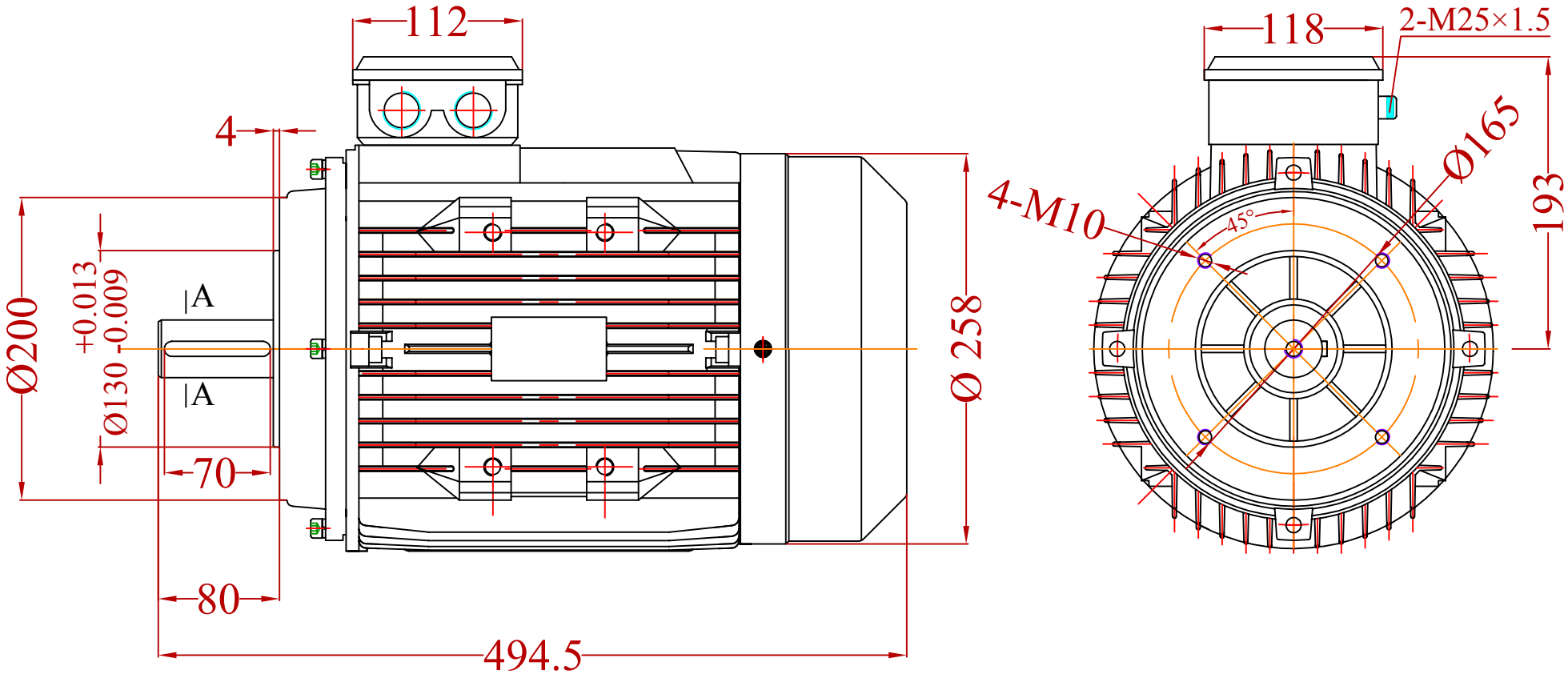

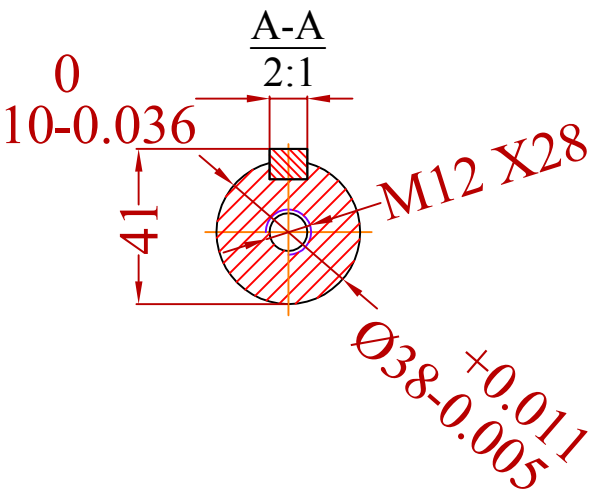

				Date	Signature
			Designed by	17/01/18	St.Karageorgis
			Checked by		
			Examine by		
Change	Date	Name			

VALIADIS
HELLENIC MOTORS

SCALE
1:4

Motor Type :AK132L
Mounting :B14A

Design Number :
MTAK-180117-4-114

Replaced from

Replace the