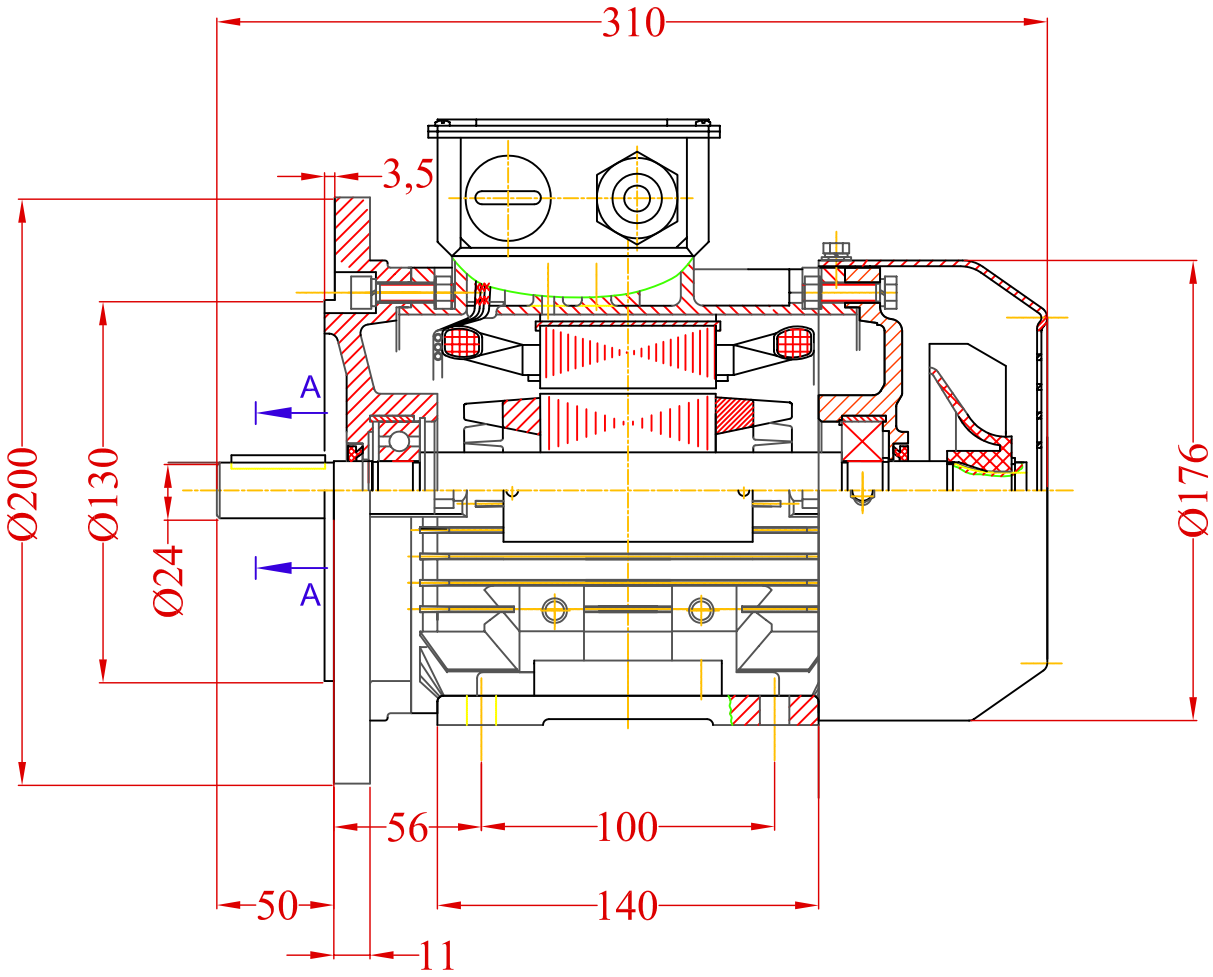

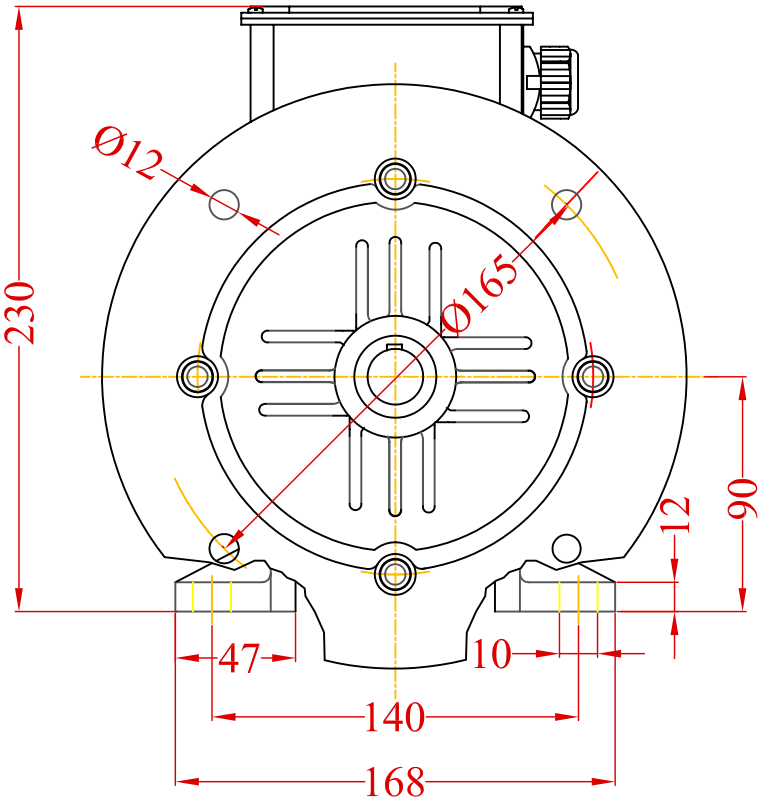

A-A

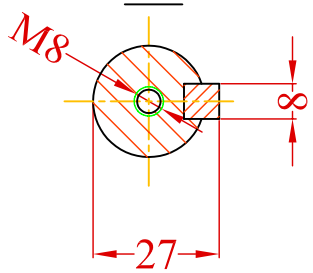

				Date	Signature	
			Designed by			
			Checked by			Weight
			Examine by			
			SCALE			
CHANGE	DATE	NAME				

VALIADIS
HELLENIC MOTORS

MOTOR TYPE AK90S
MOUNTING B35

Design Number

Replaced from

Replace the