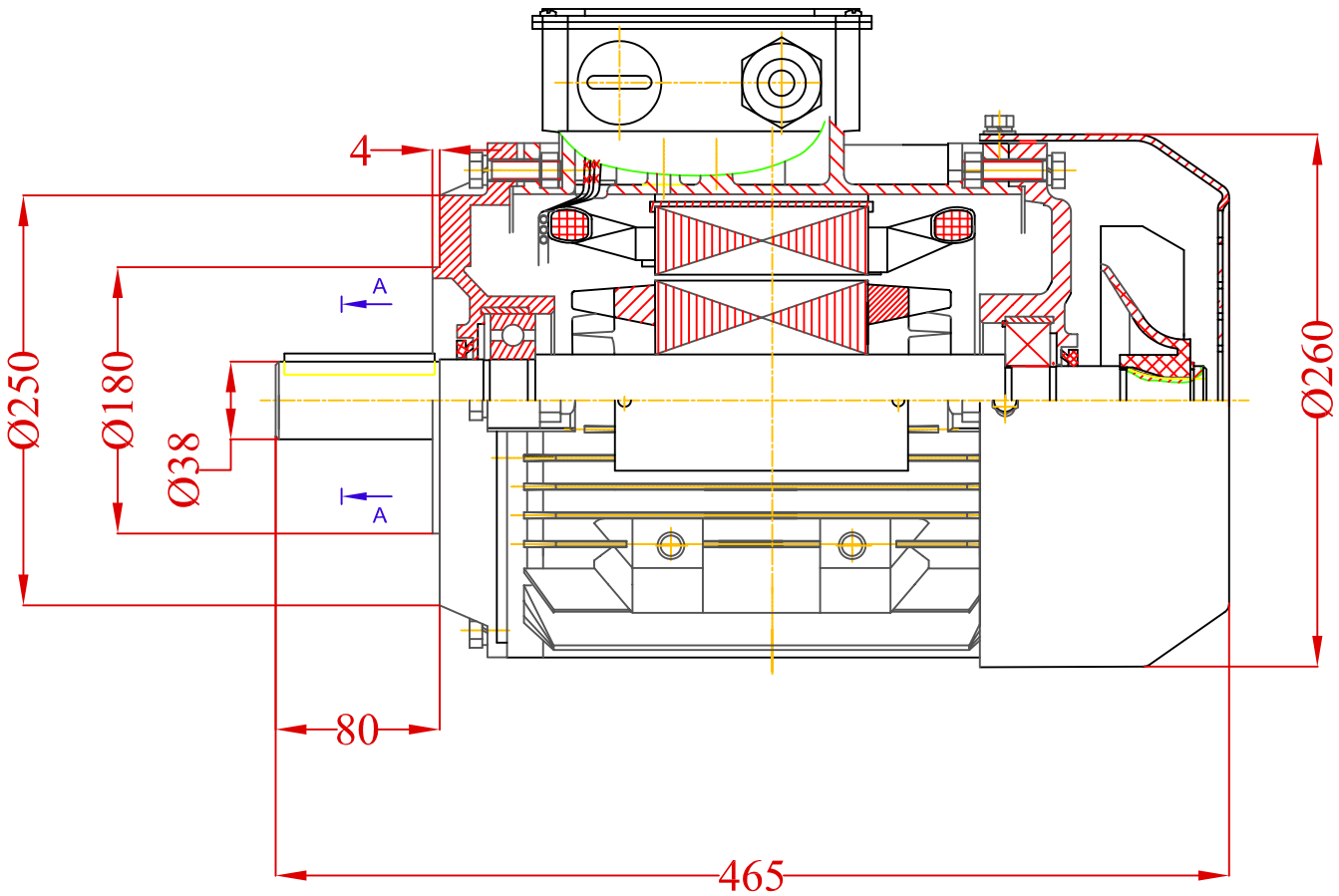

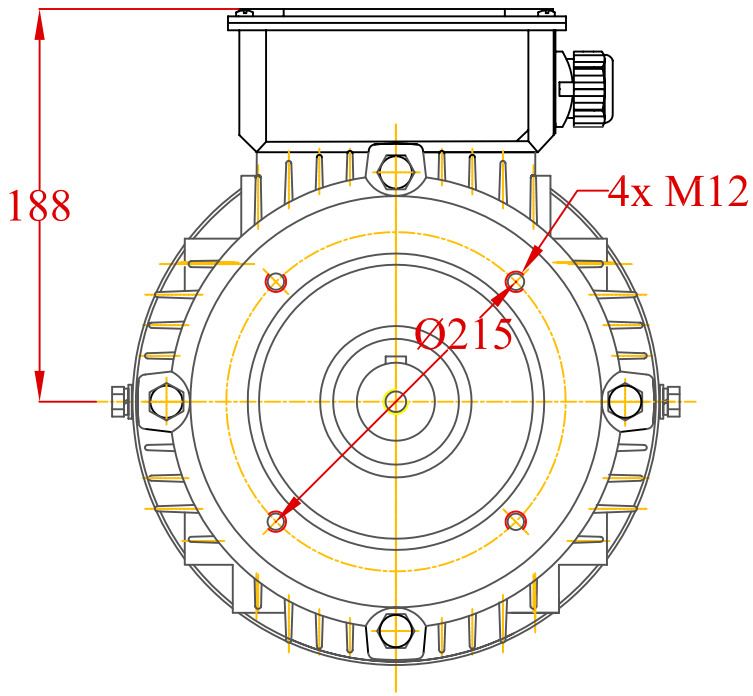

A-A

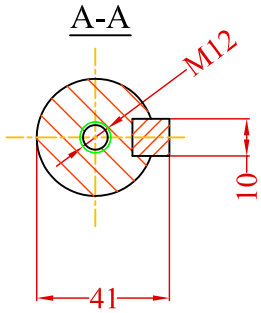

CHANGE	DATE	NAME

	Date	Signature	
Designed by			
Checked by			Weight
Examine by			
SCALE			

VALIADIS
HELLENIC MOTORS

MOTOR TYPE AK132S
MOUNTING B14B

Design Number

Replaced from

Replace the