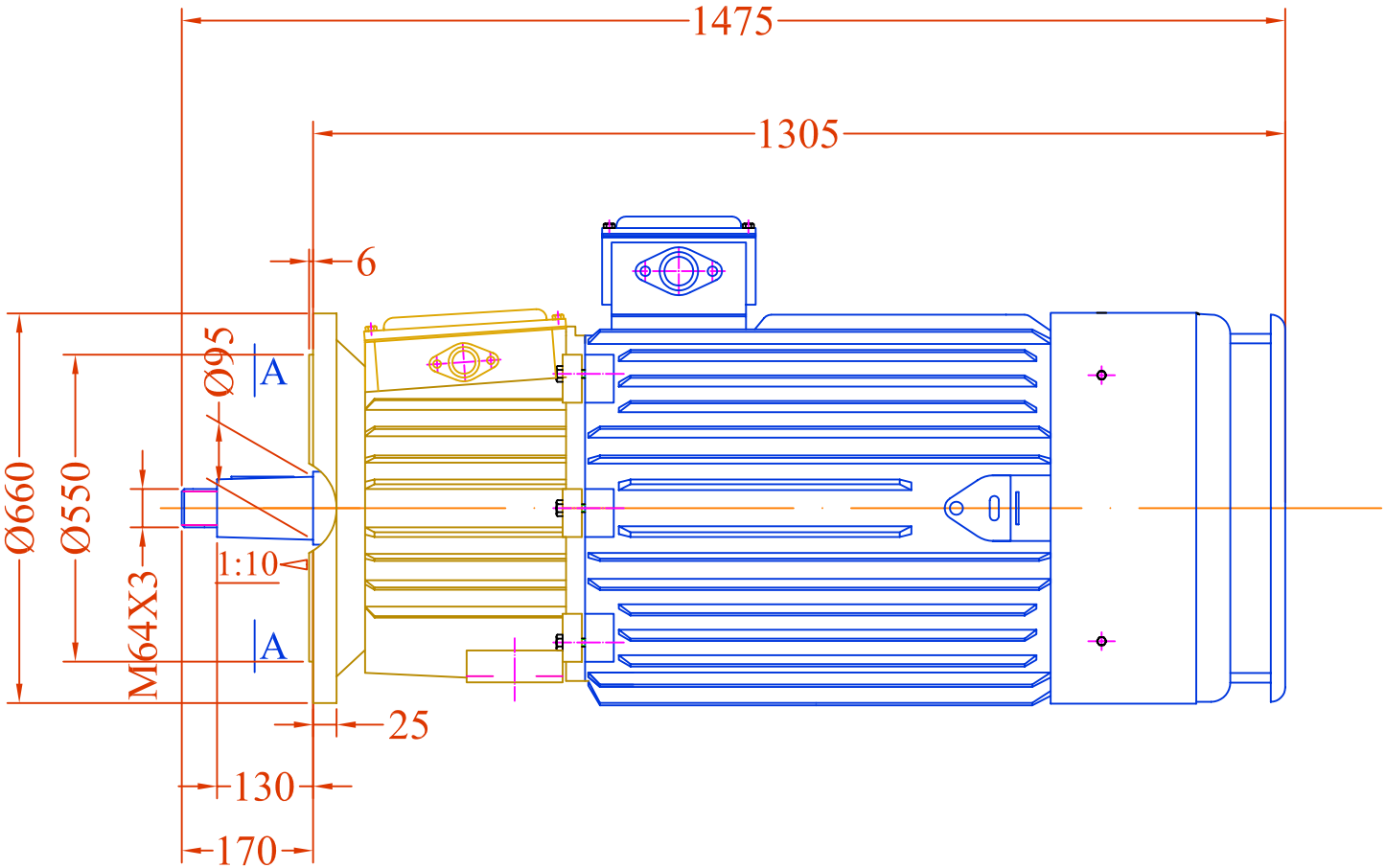

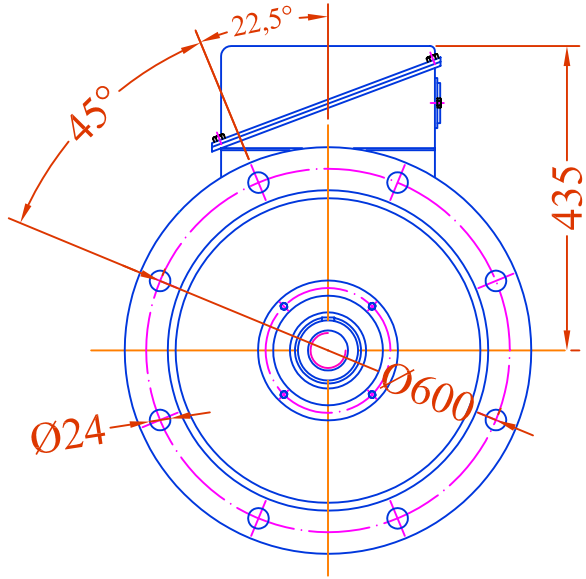

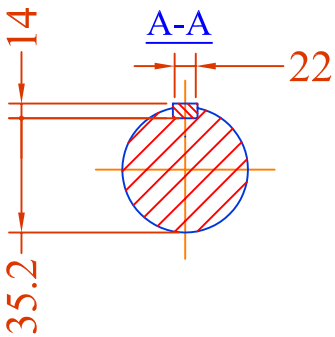

CHANGE	DATE	NAME

	Date	Signature	
Designed by			Weight
Checked by			
Examine by			
SCALE			

VALIADIS
HELLENIC MOTORS

MOTOR TYPE KZR 315S
MOUNTING B5

Design Number

Replaced from

Replace the