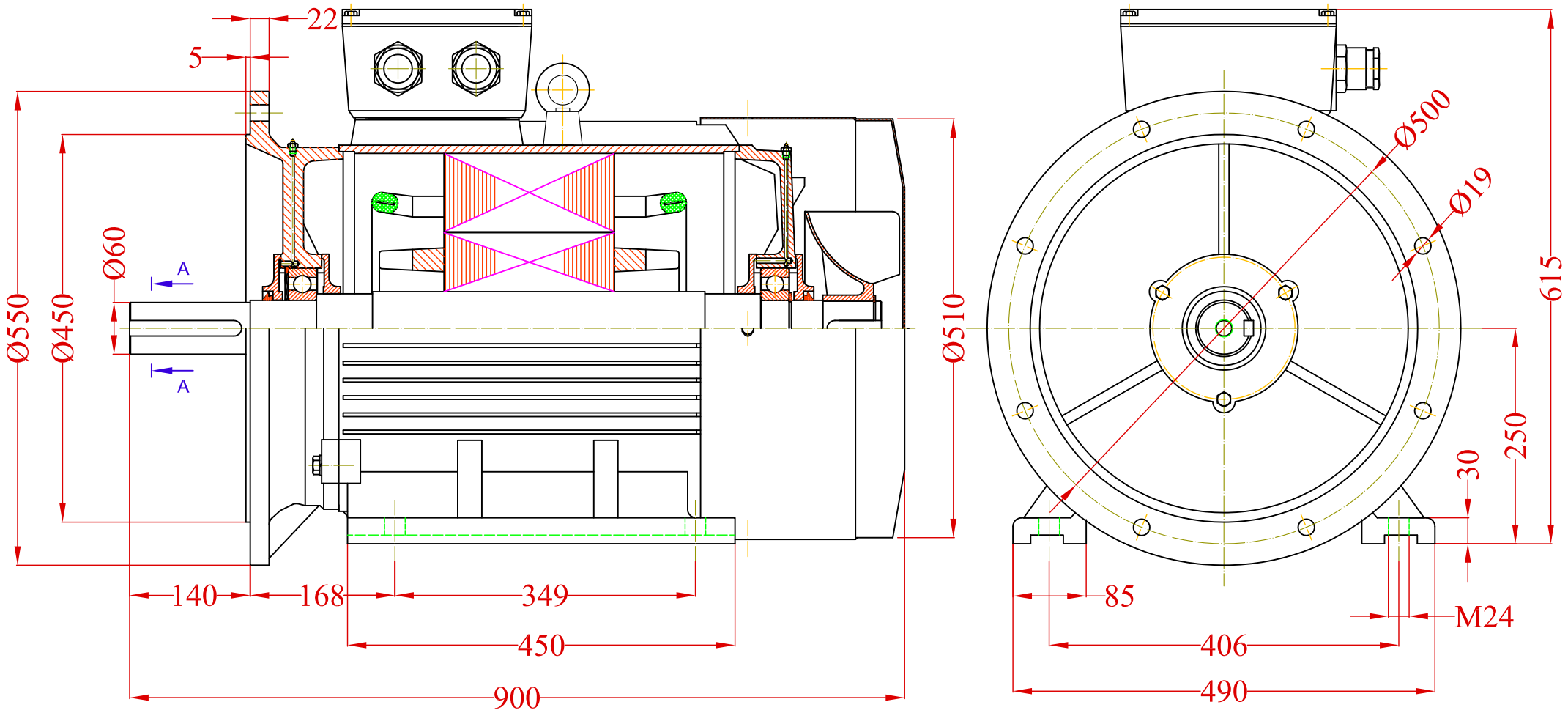

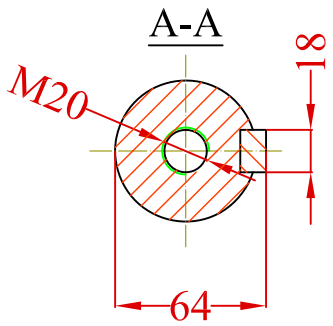

				Date	Signature		
			Designed by				VALIADIS
			Checked by			Weight	HELLENIC MOTORS
			Examine by				
			SCALE	MOTOR TYPE K250M-2 MOUNTING B35			Design Number
							Replaced from
CHANGE	DATE	NAME					Replace the