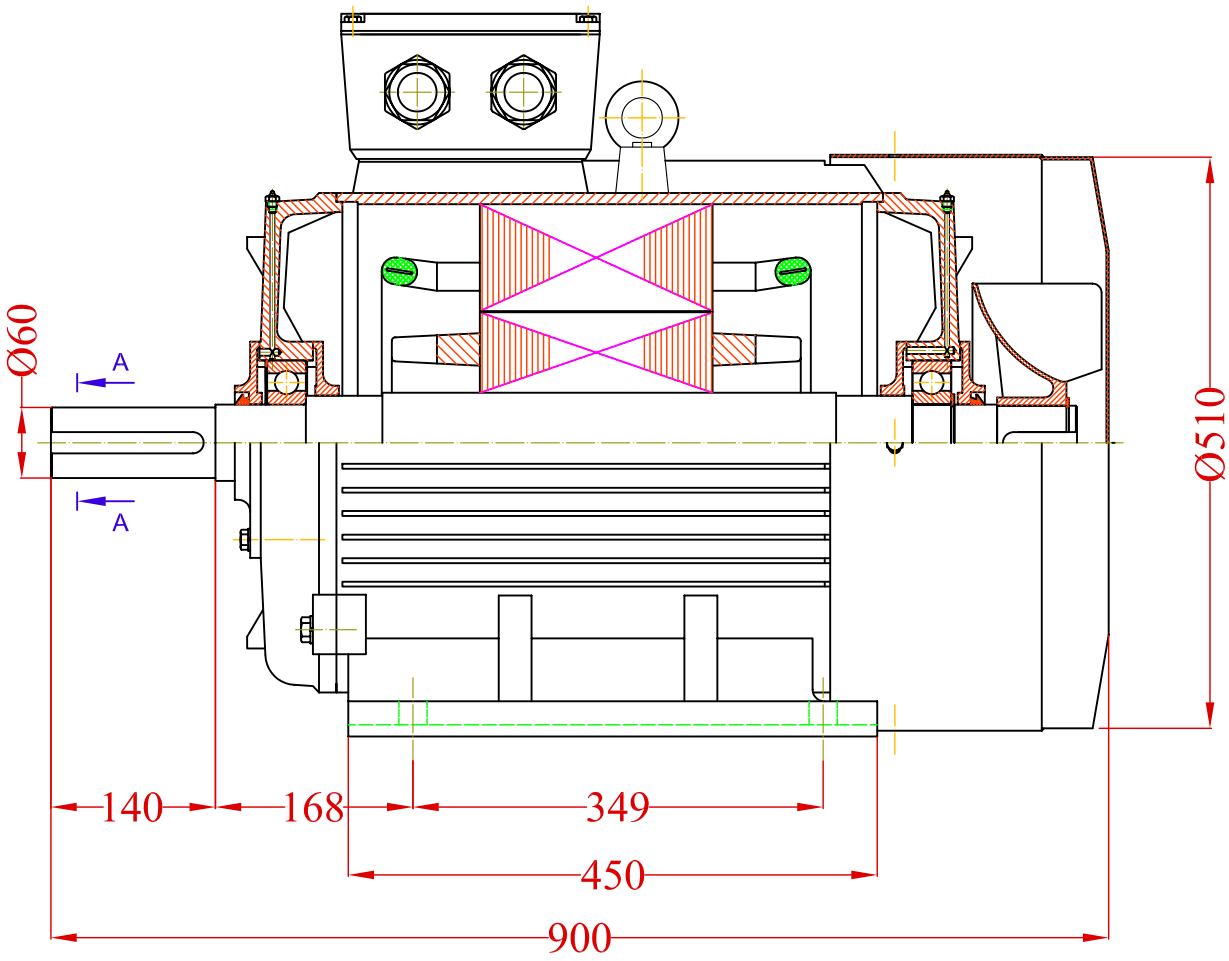

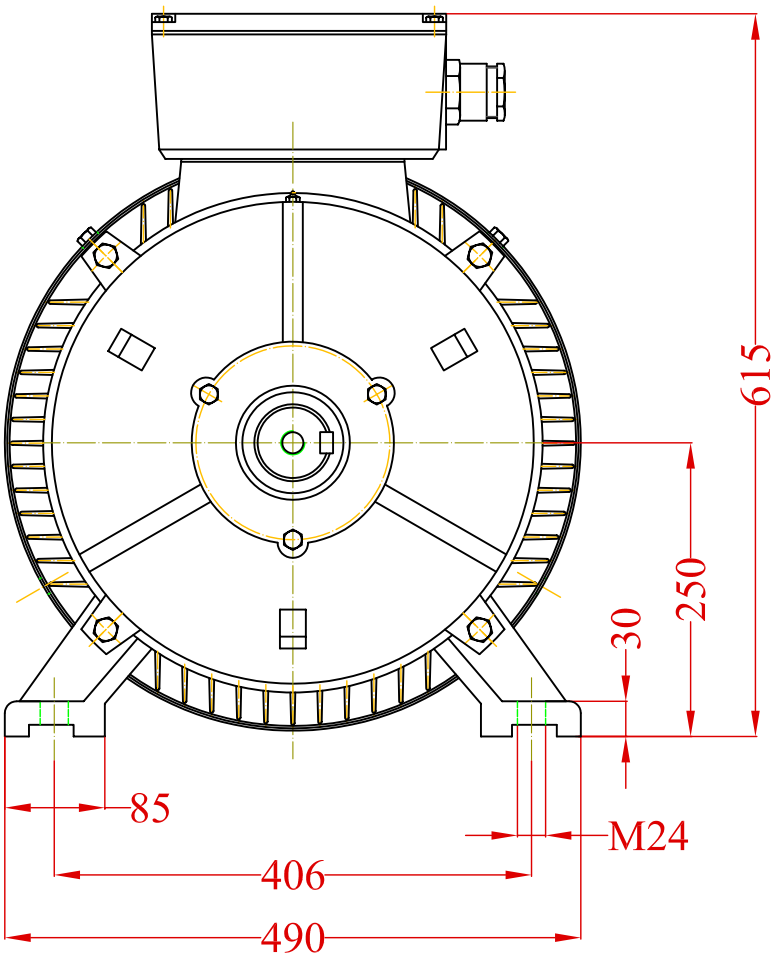

A-A

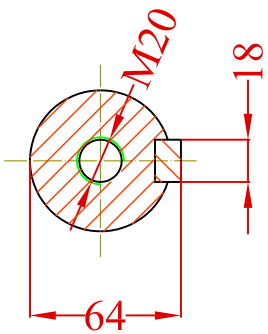

CHANGE	DATE	NAME

	Date	Signature	
Designed by			
Checked by			Weight
Examine by			

SCALE

VALIADIS
HELLENIC MOTORS

MOTOR TYPE K250M-2
MOUNTING B3

Design Number

Replaced from

Replace the