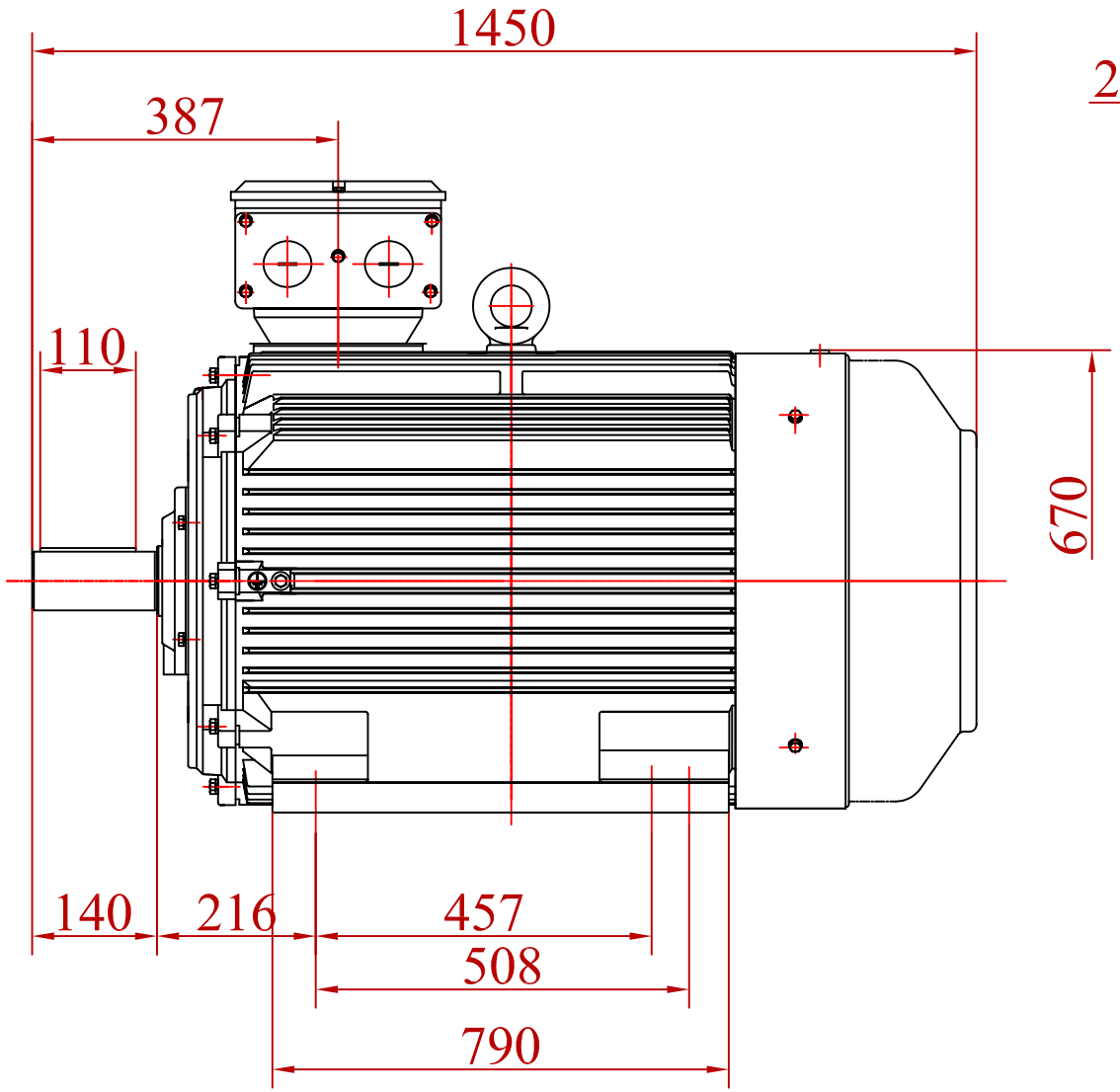

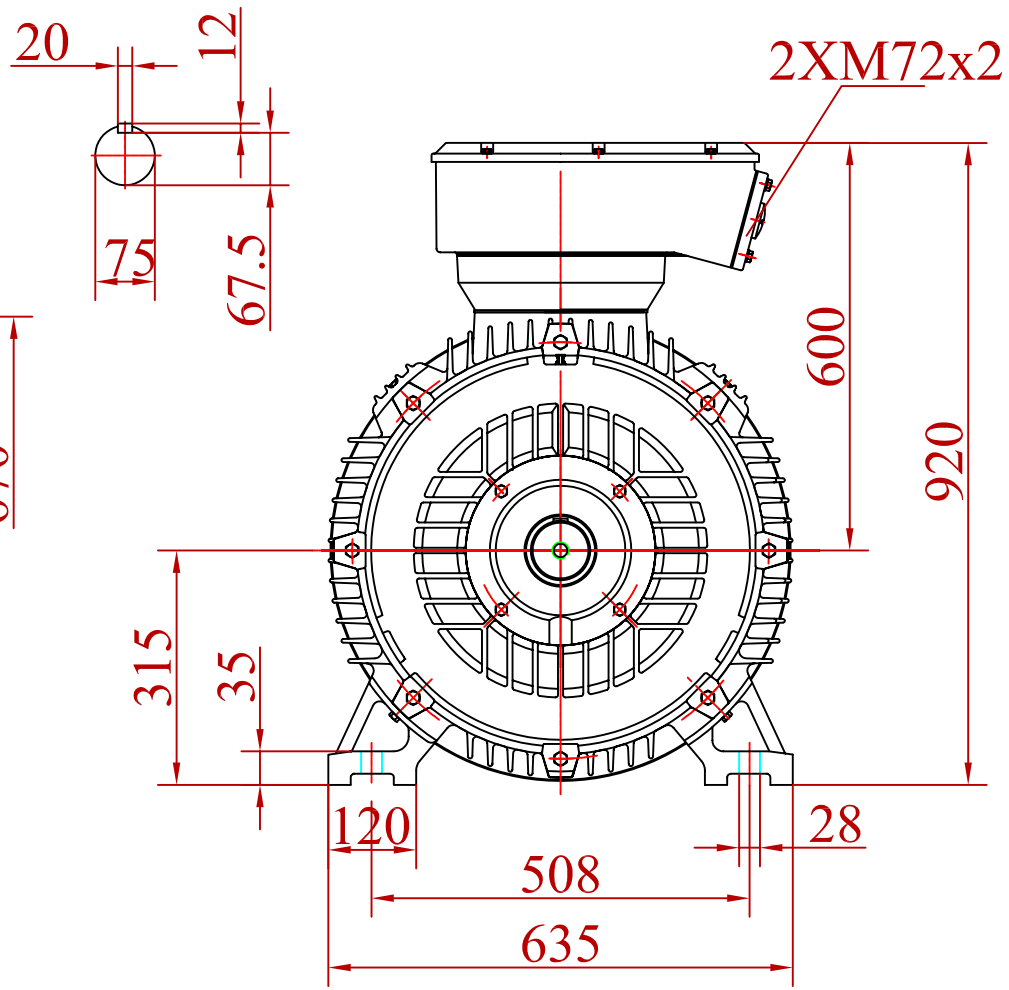

				Date	Signature
			Designed by	26/11/15	St.Karageorgis
			Checked by		
			Examine by		
Change	Date	Name			

VALIADIS
HELLENIC MOTORS

SCALE

Motor Type :K315LX-2
Mounting :B3

Design Number :
MTKLX-151126-5

Replaced from

Replace the