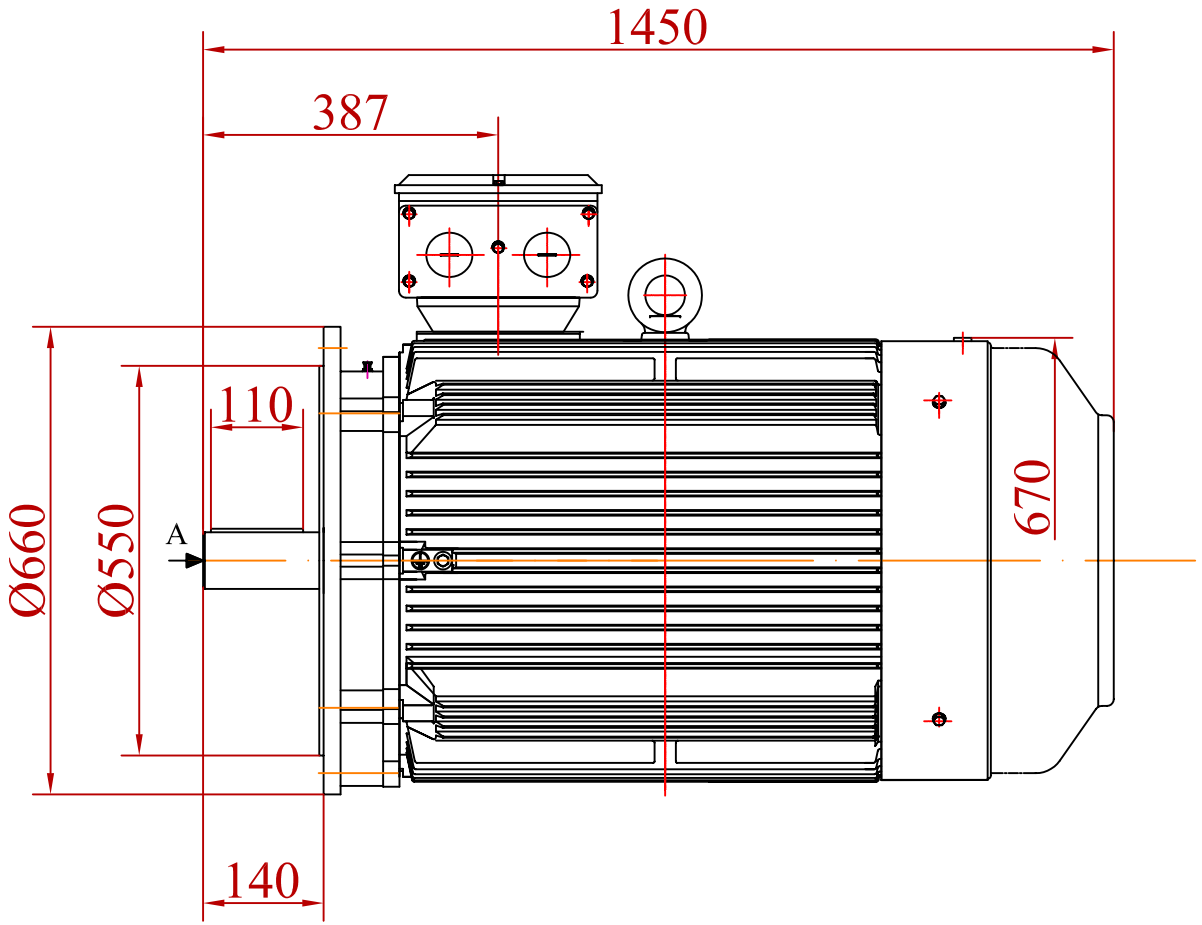

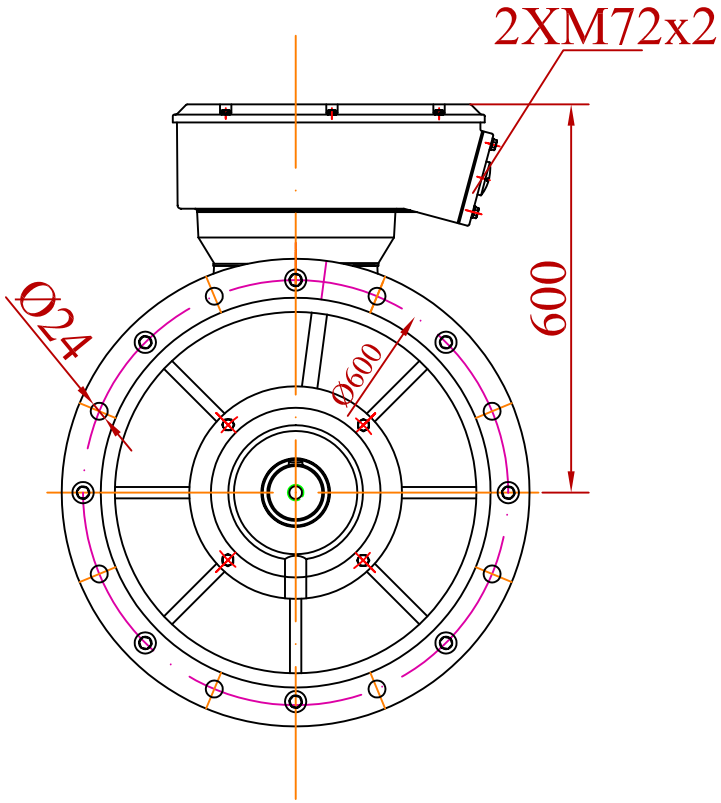

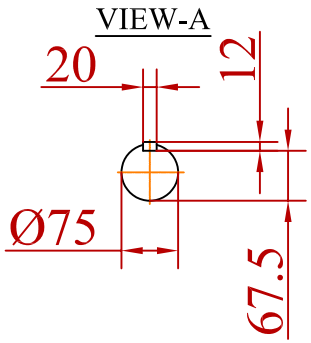

Change	Date	Name

	Date	Signature
Designed by	08/02/16	St.Karageorgis
Checked by		
Examine by		

VALIADIS
HELLENIC MOTORS

SCALE

Motor Type :K315LX-2
Mounting :B5

Design Number :
MTKLX-160208-3

Replaced from

Replace the