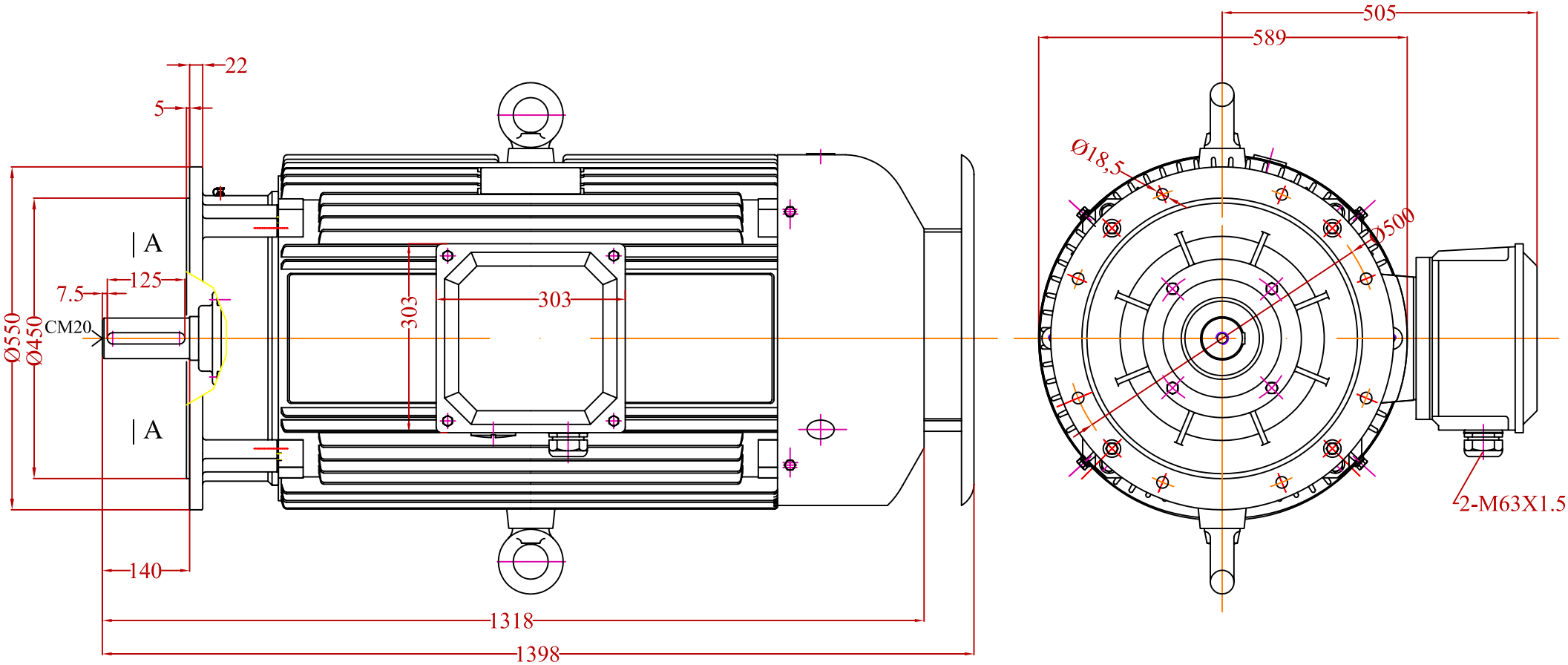

A-A
2:1

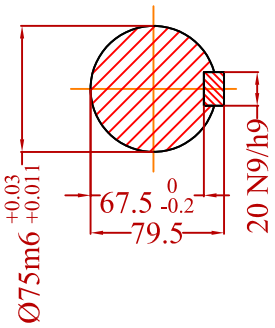

				Date	Signature	
			Designed by			
			Checked by			
			Examine by			
Change	Date	Name	SCALE			

VALIADIS
HELLENIC MOTORS

Motor Type :K280LX-4-6
Mounting :V1

Design Number :
MTKLX-150624-88

Replaced from

Replace the