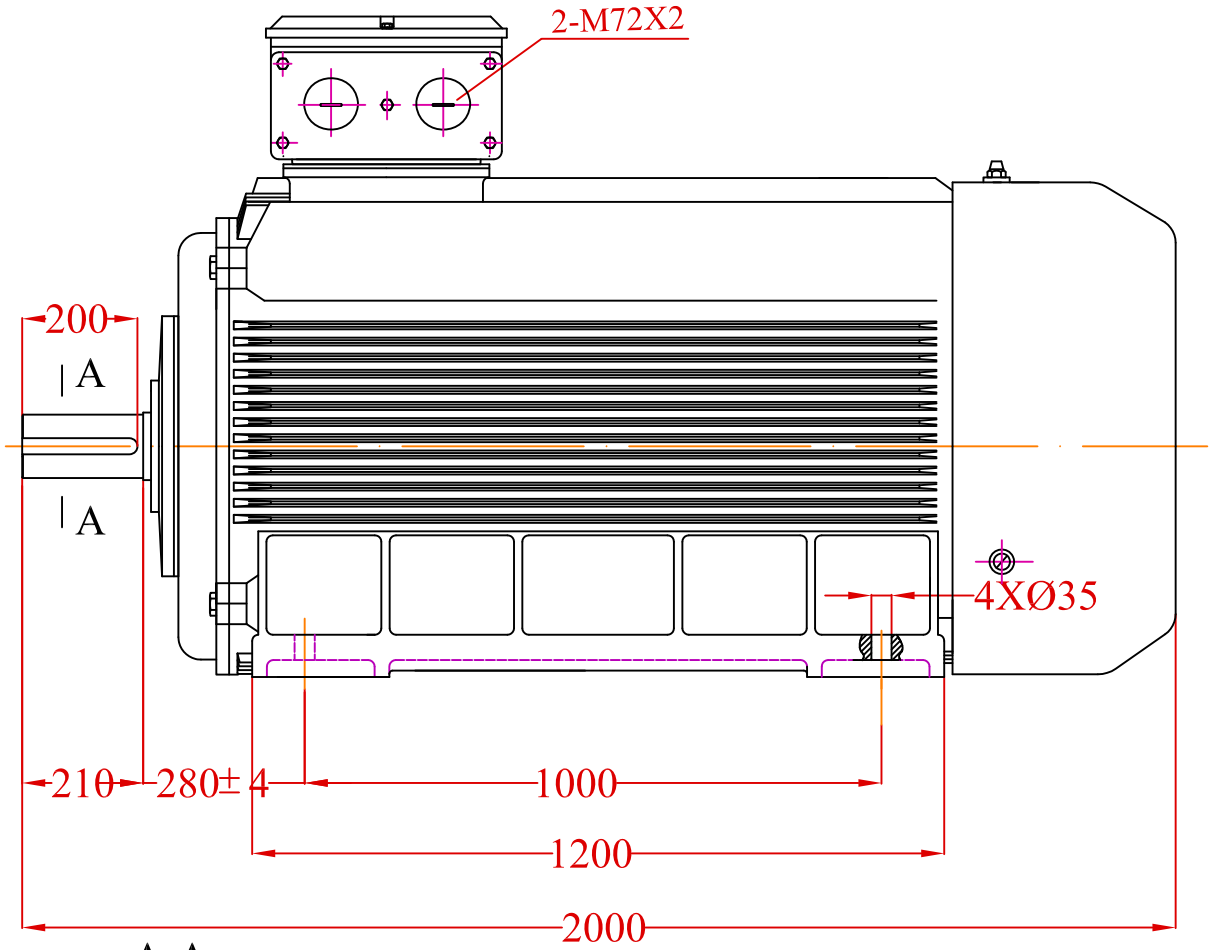

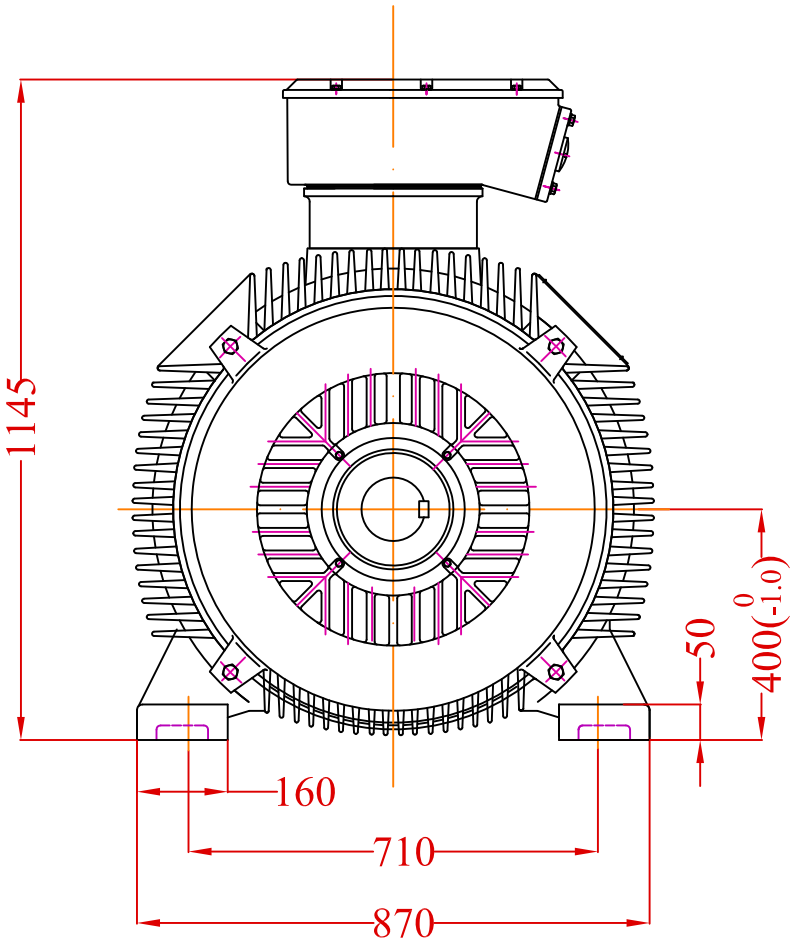

A-A
2:1

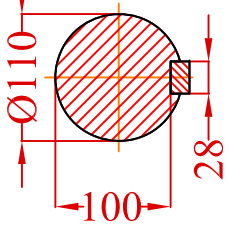

				Date	Signature		
			Designed by				VALIADIS HELLENIC MOTORS
			Checked by				
			Examine by				
			SCALE	MOTOR TYPE : K400(HL) High Load MOUNTING : B3			Design Number :
							Replaced from
Change	Date	Name					Replace the