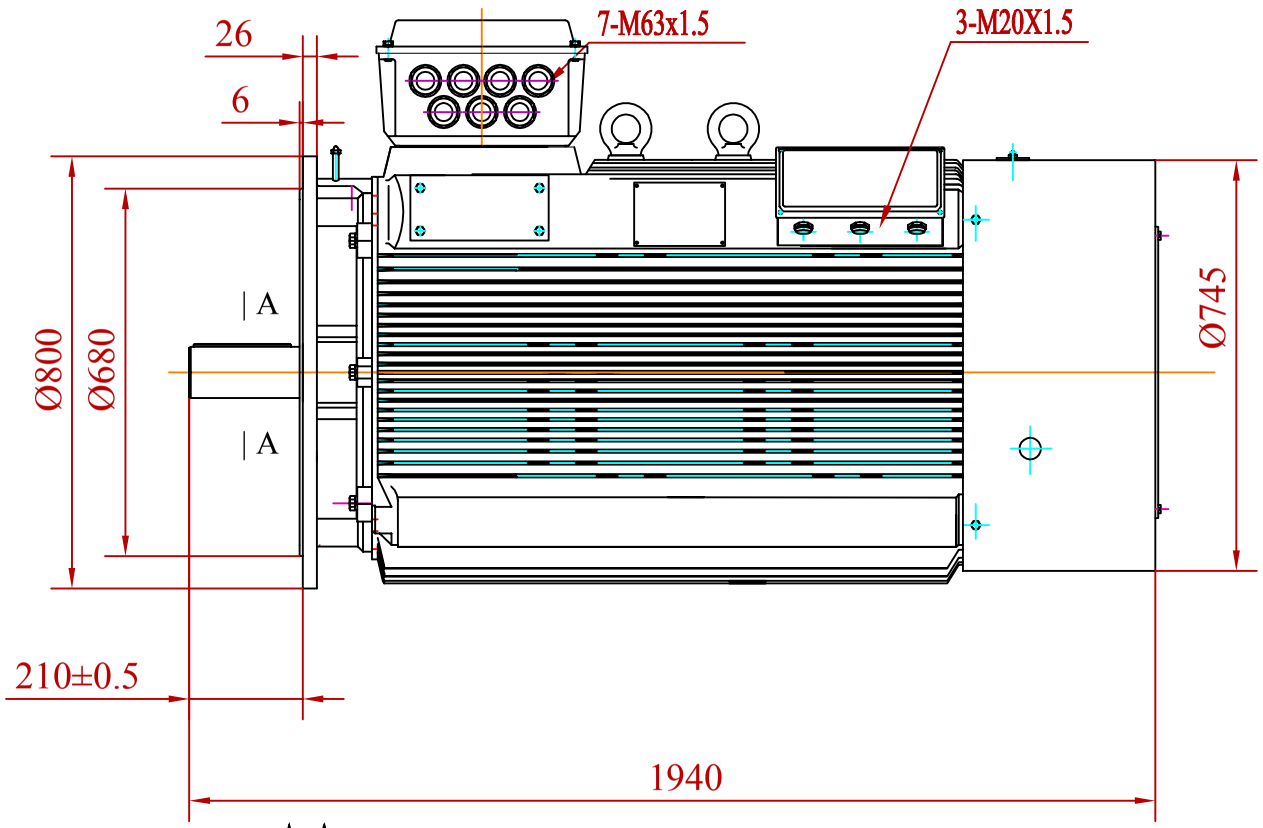

A-A

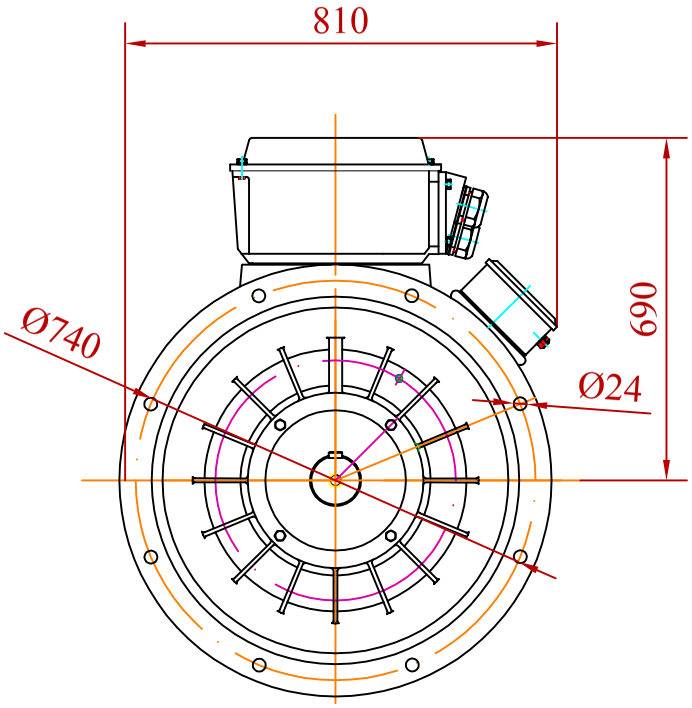

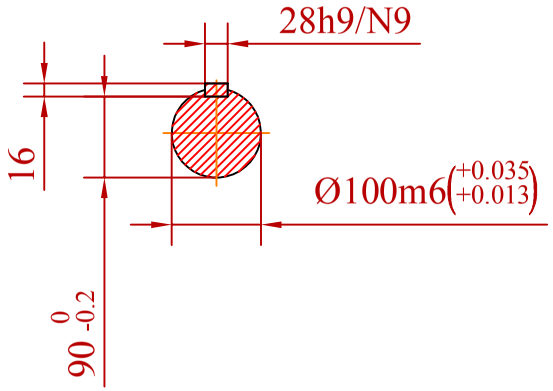

Change	Date	Name

	Date	Signature
Designed by	06/02/19	St.Karageorgis
Checked by		
Examine by		

VALIADIS
HELLENIC MOTORS

SCALE
1:14

Motor Type : K355LX-4
Mounting : B5

Design Number :
MTKX-190206-8

Replaced from

Replace the