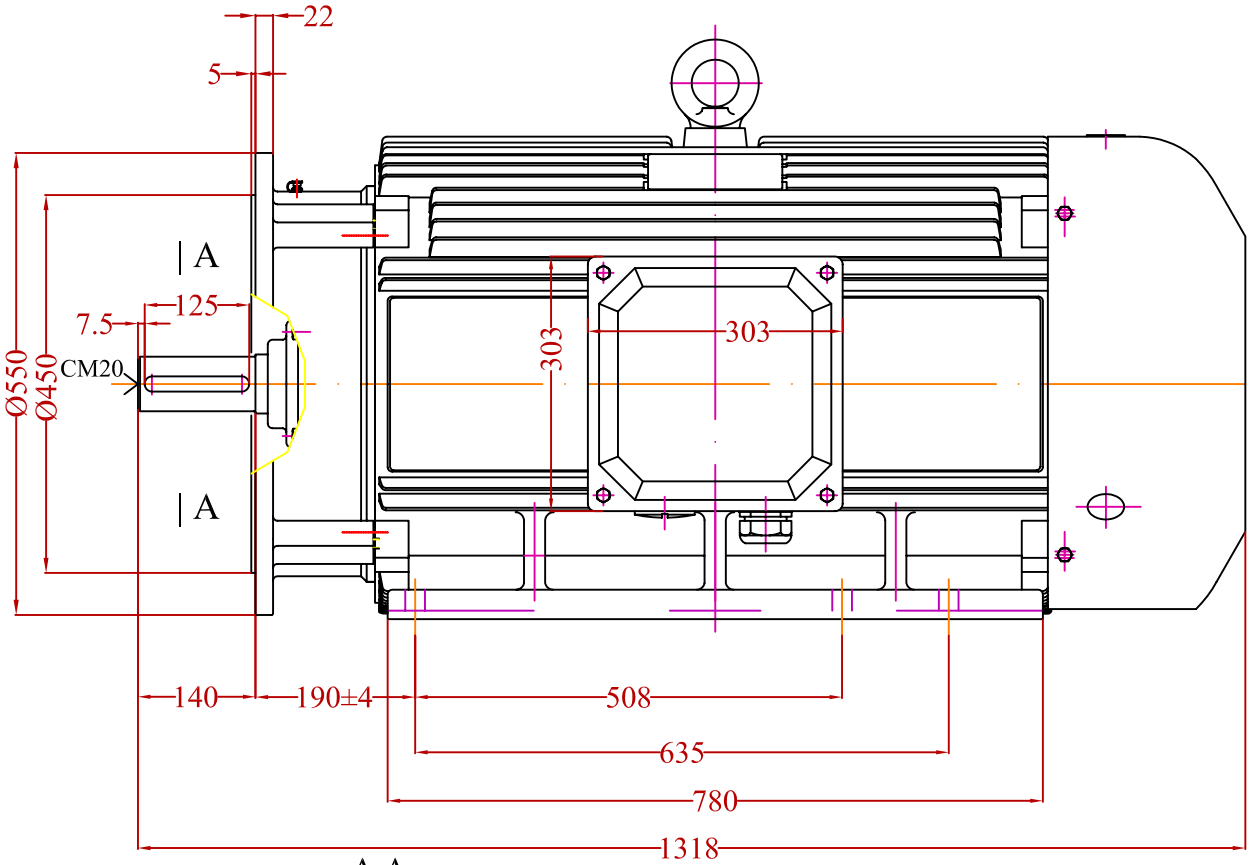

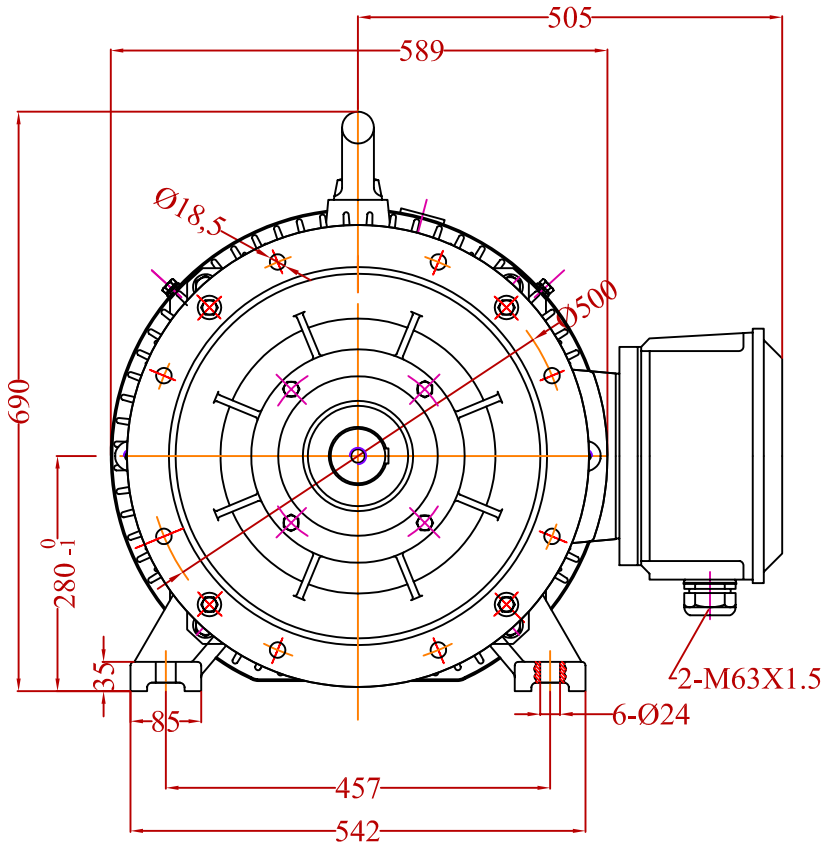

A-A
2:1

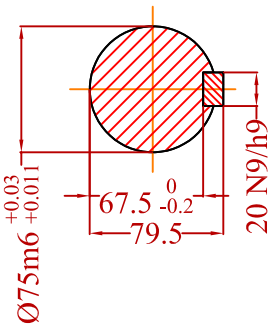

Change	Date	Name

	Date	Signature
Designed by		
Checked by		
Examine by		

SCALE

Motor Type :K280LX-4-6
Mounting :B35

VALIADIS
HELLENIC MOTORS

Design Number :
MTKLX-150624-68

Replaced from

Replace the