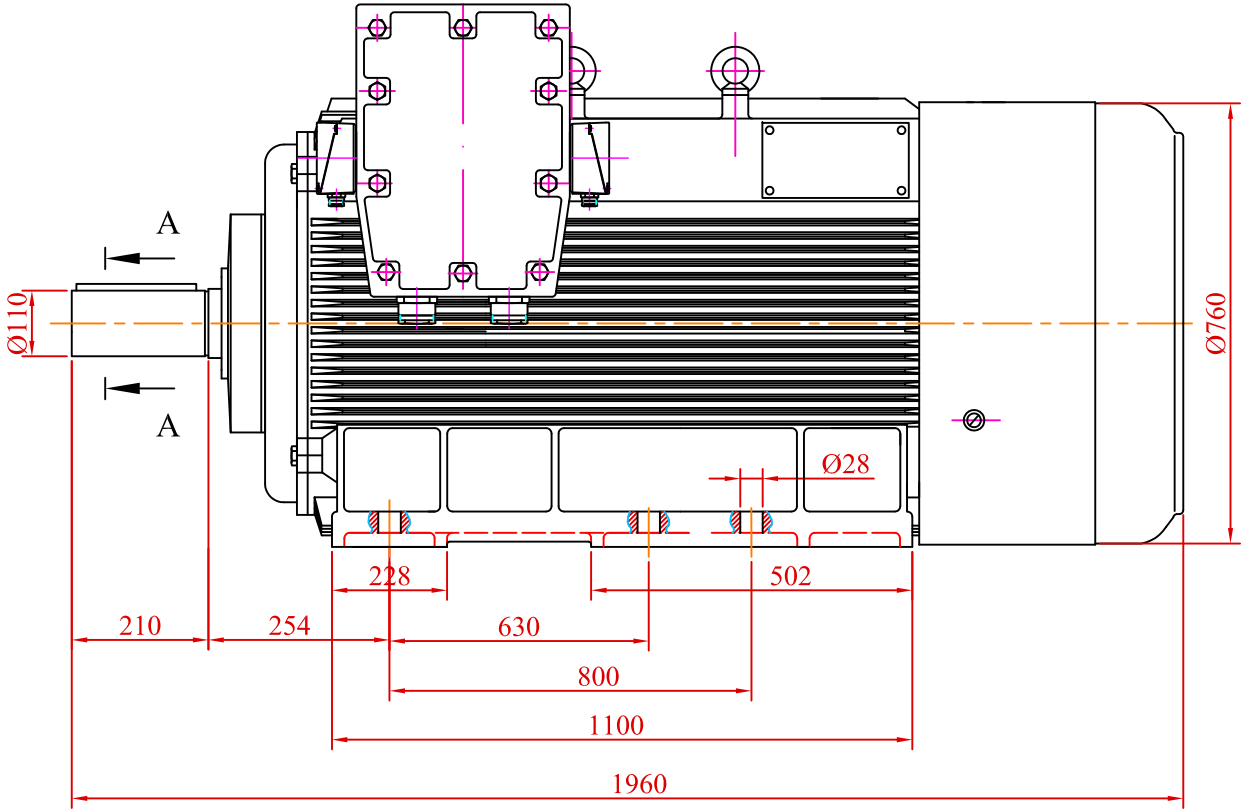

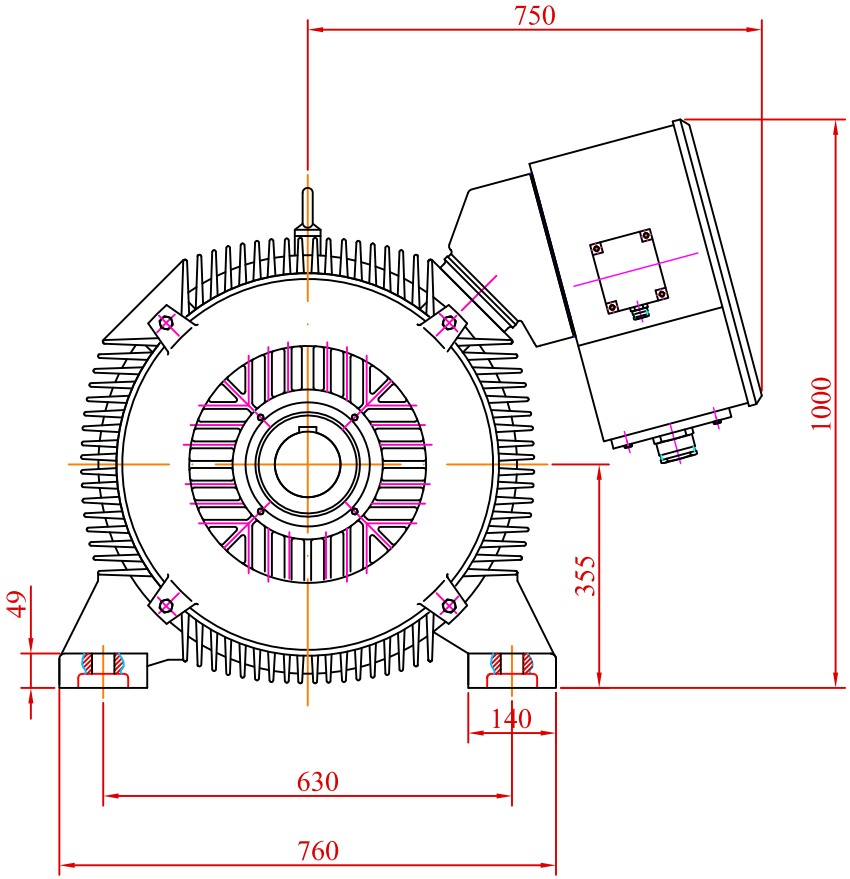

A - A

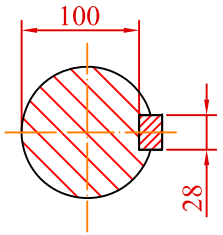

				Date	Signature		VALIADIS HELLENIC MOTORS
			Designed by				
			Checked by			Weight	
			Examine by				
			SCALE	MOTOR TYPE K355L- 4-6-8(HL) MOUNTING B3			Customer :
							Replaced from
CHANGE	DATE	NAME					Replace the