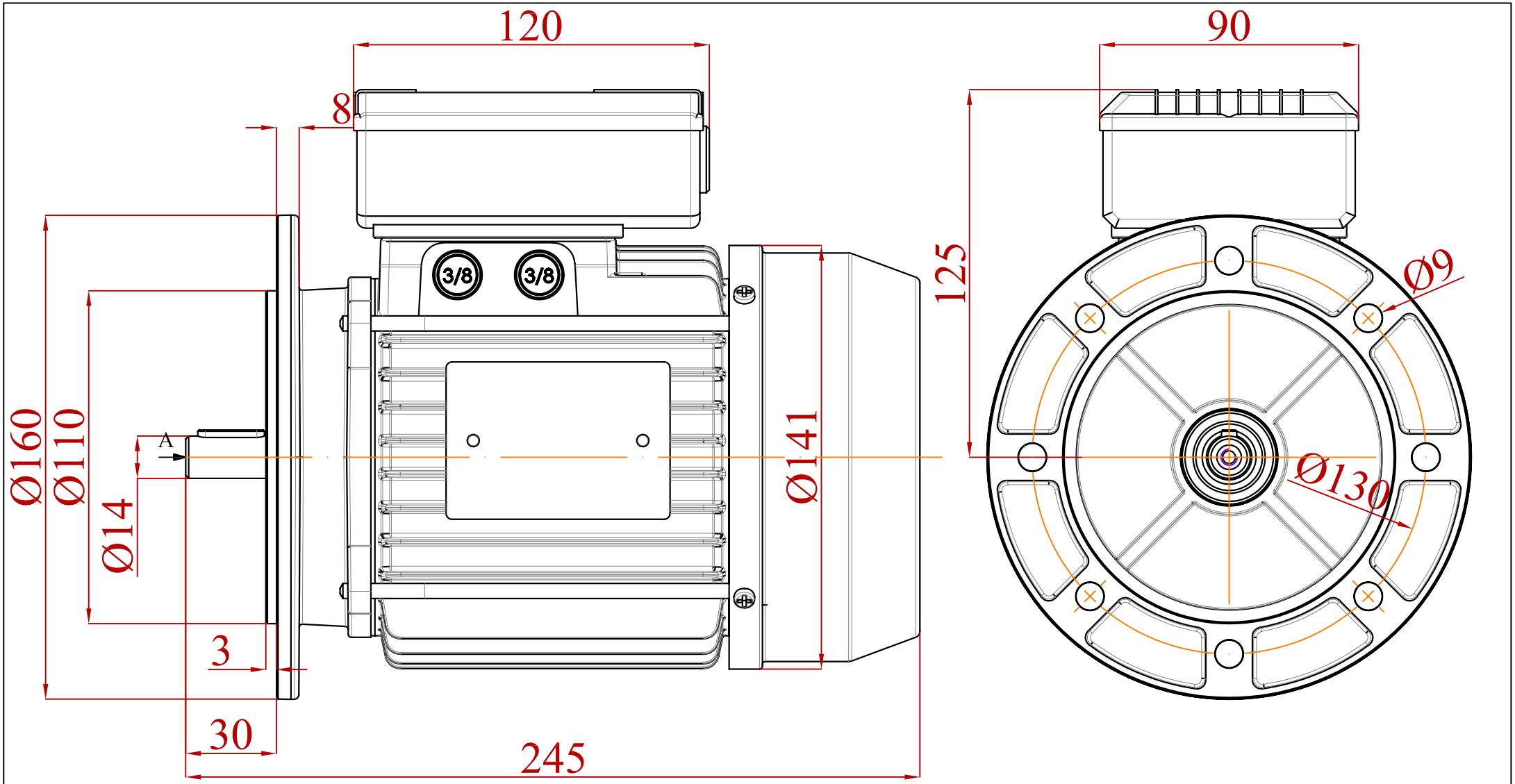

VIEW-A

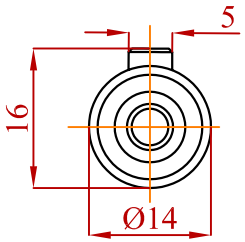

Change	Date	Name

	Date	Signature
Designed by	13/03/15	St.Karageorgis
Checked by		
Examine by		

VALIADIS
HELLENIC MOTORS

SCALE

Motor Type :MK71
Mounting :B5

Design Number :
MTMK-150313-6

Replaced from

Replace the