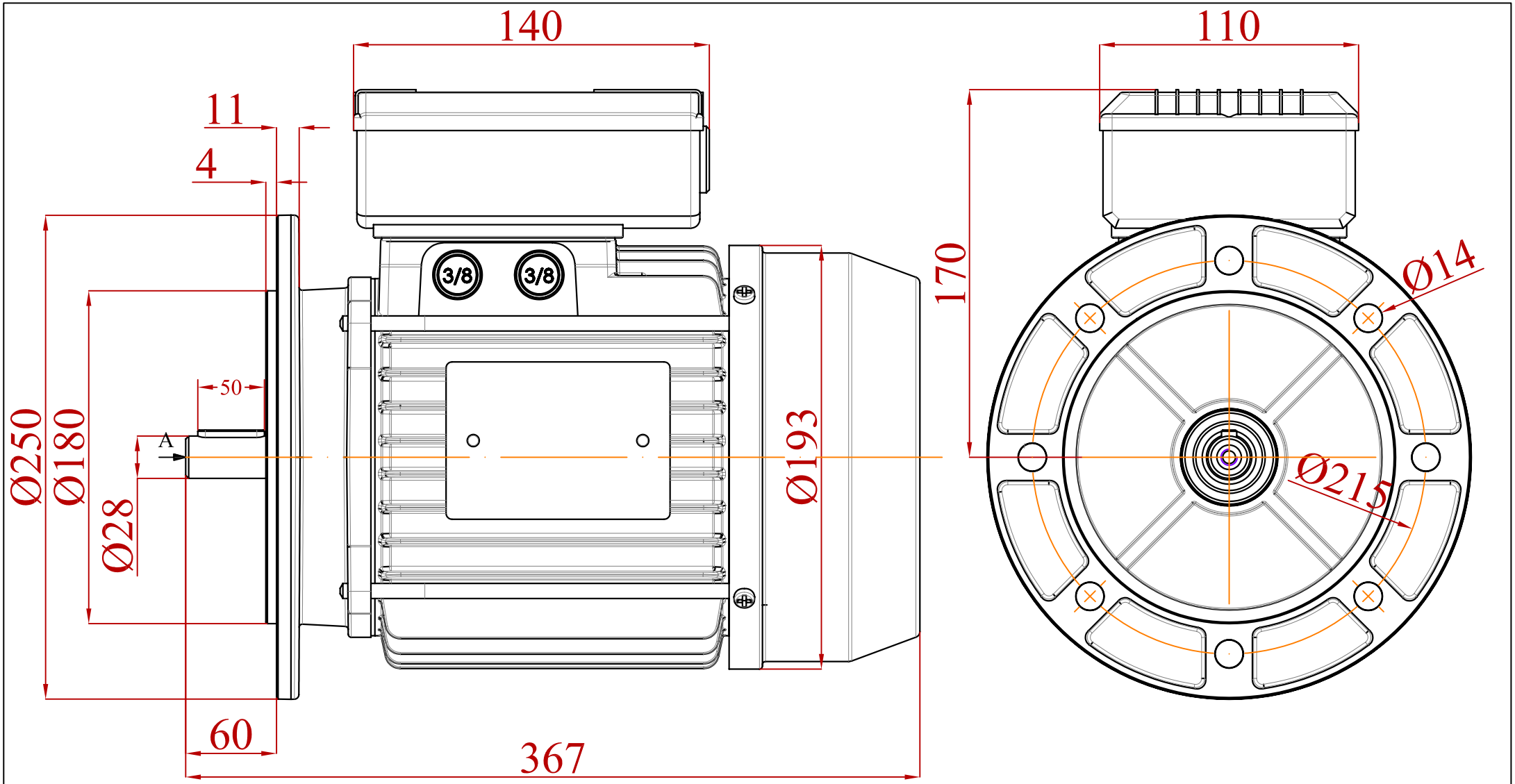

VIEW-A

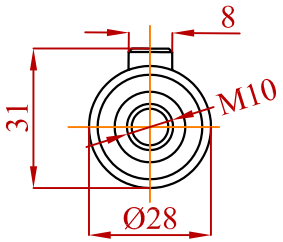

Change	Date	Name

	Date	Signature
Designed by	15/12/15	St.Karageorgis
Checked by		
Examine by		

SCALE

VALIADIS
HELLENIC MOTORS

Motor Type :MK100L
Mounting :B5

Design Number :
MTMK-151215-13

Replaced from

Replace the