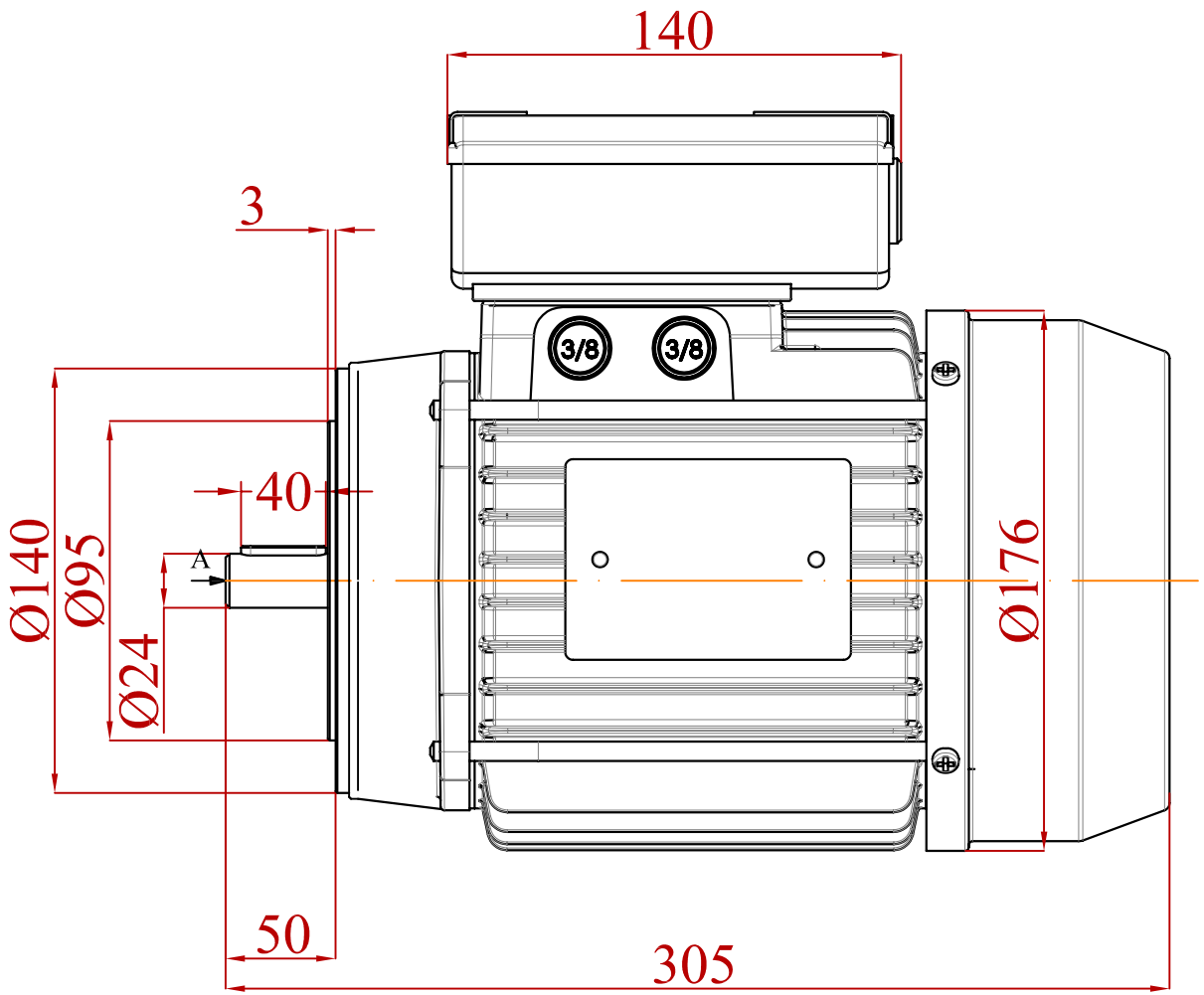

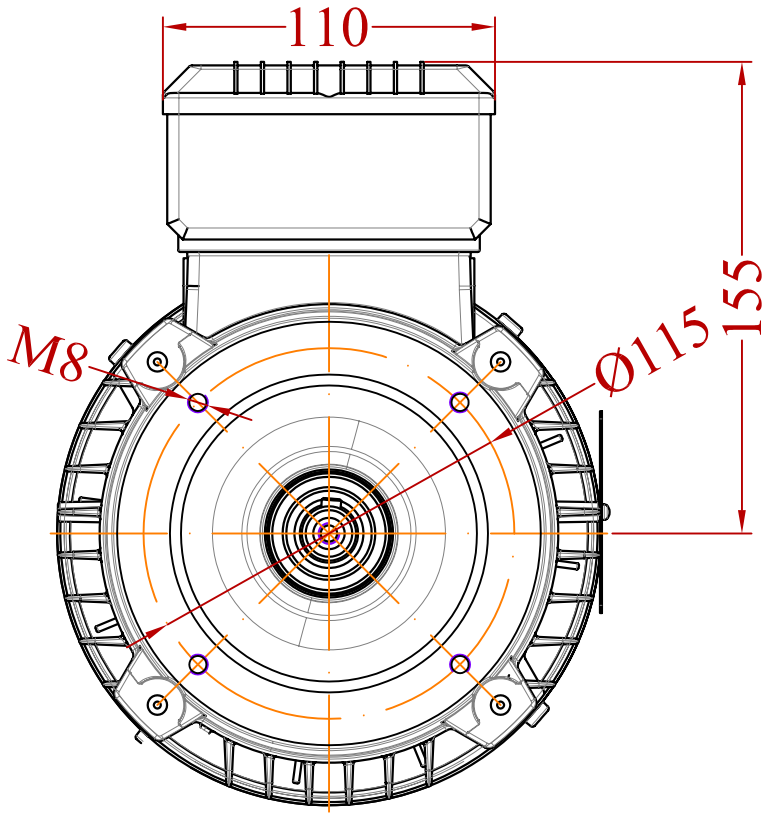

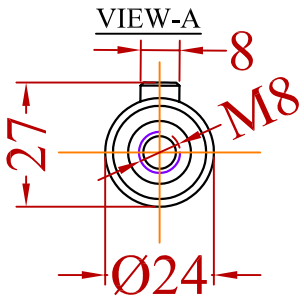

Change	Date	Name

	Date	Signature
Designed by	15/12/15	St.Karageorgis
Checked by		
Examine by		

SCALE

Motor Type :MK90S
Mounting :B14

VALIADIS
HELLENIC MOTORS

Design Number :
MTMK-151215-9

Replaced from

Replace the