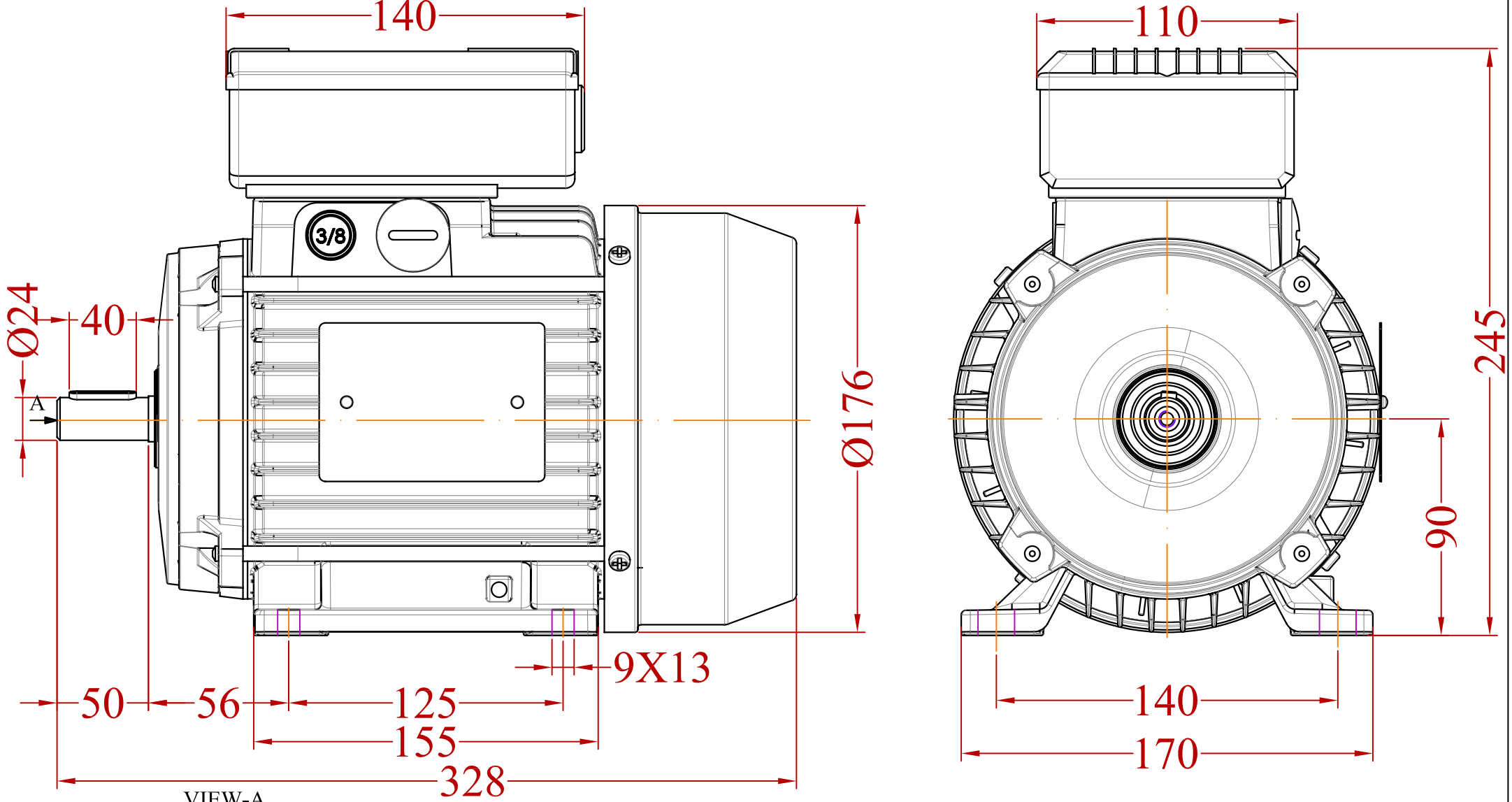

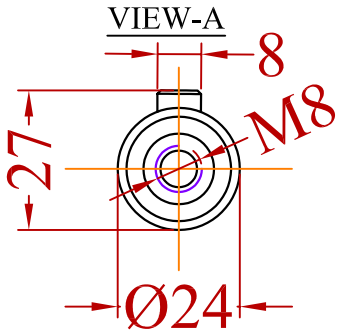

				Date	Signature
			Designed by	04/11/15	St.Karageorgis
			Checked by		
			Examine by		
Change	Date	Name	SCALE		

VALIADIS
HELLENIC MOTORS

Motor Type :MK90L
Mounting :B3

Design Number :
MTMK-151104-7

Replaced from

Replace the