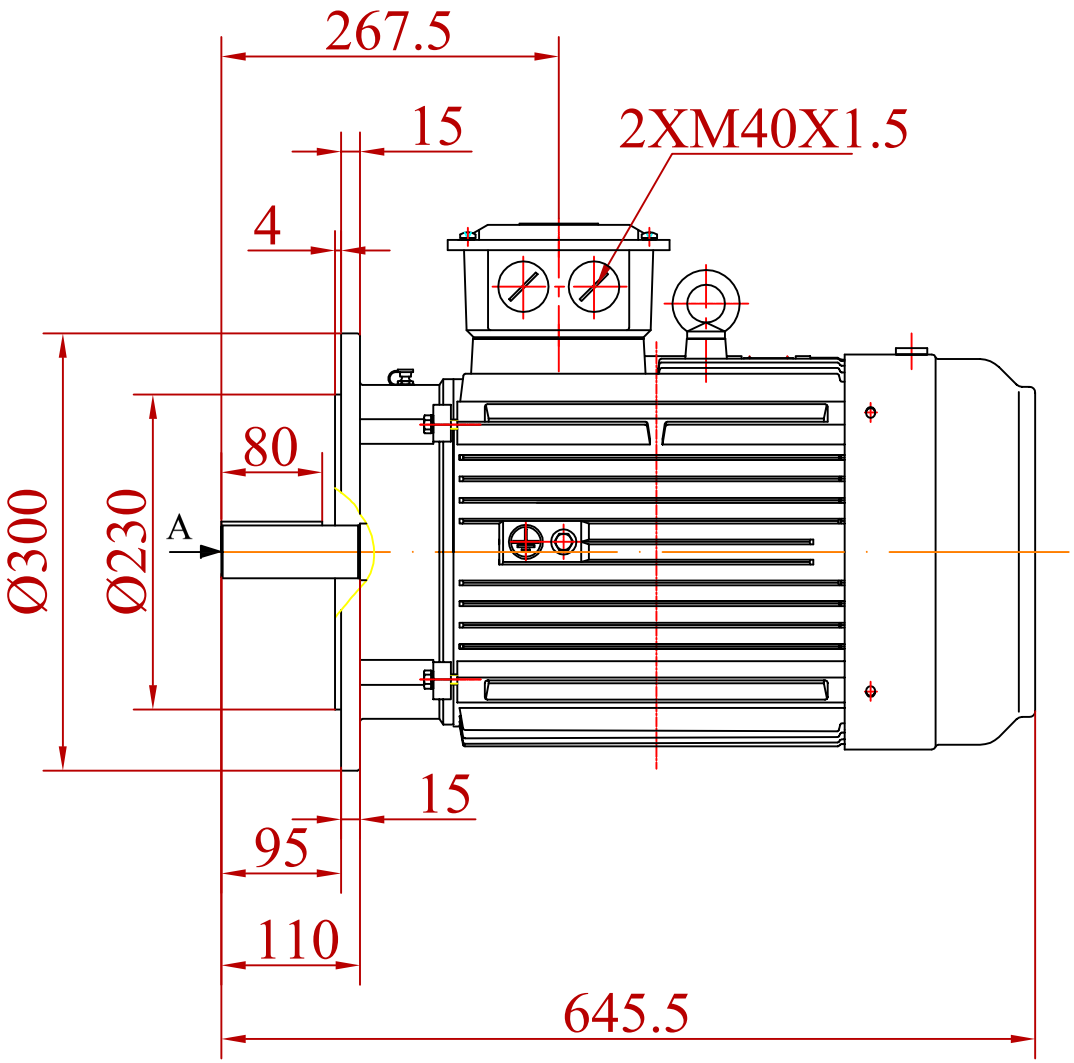

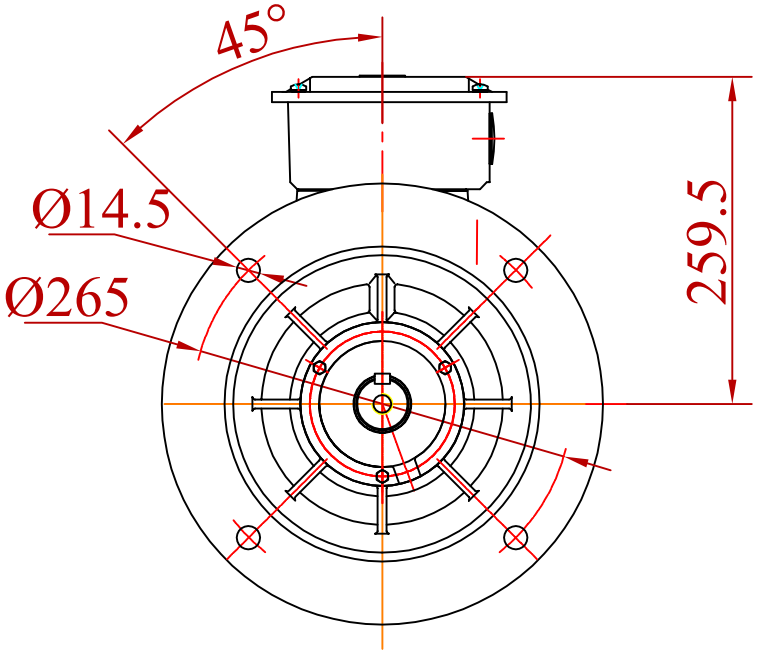

VIEW- A

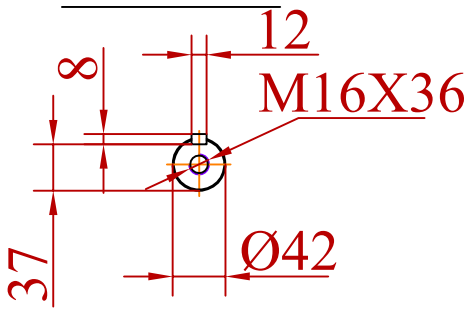

Change	Date	Name

	Date	Signature
Designed by	10/08/20	St.Karageorgis
Checked by		
Examine by		

VALIADIS
HELLENIC MOTORS

SCALE
1:6

Motor Type : K160L
Mounting : B5R

Design Number :
MWFRF-200810-21

Replaced from

Replace the