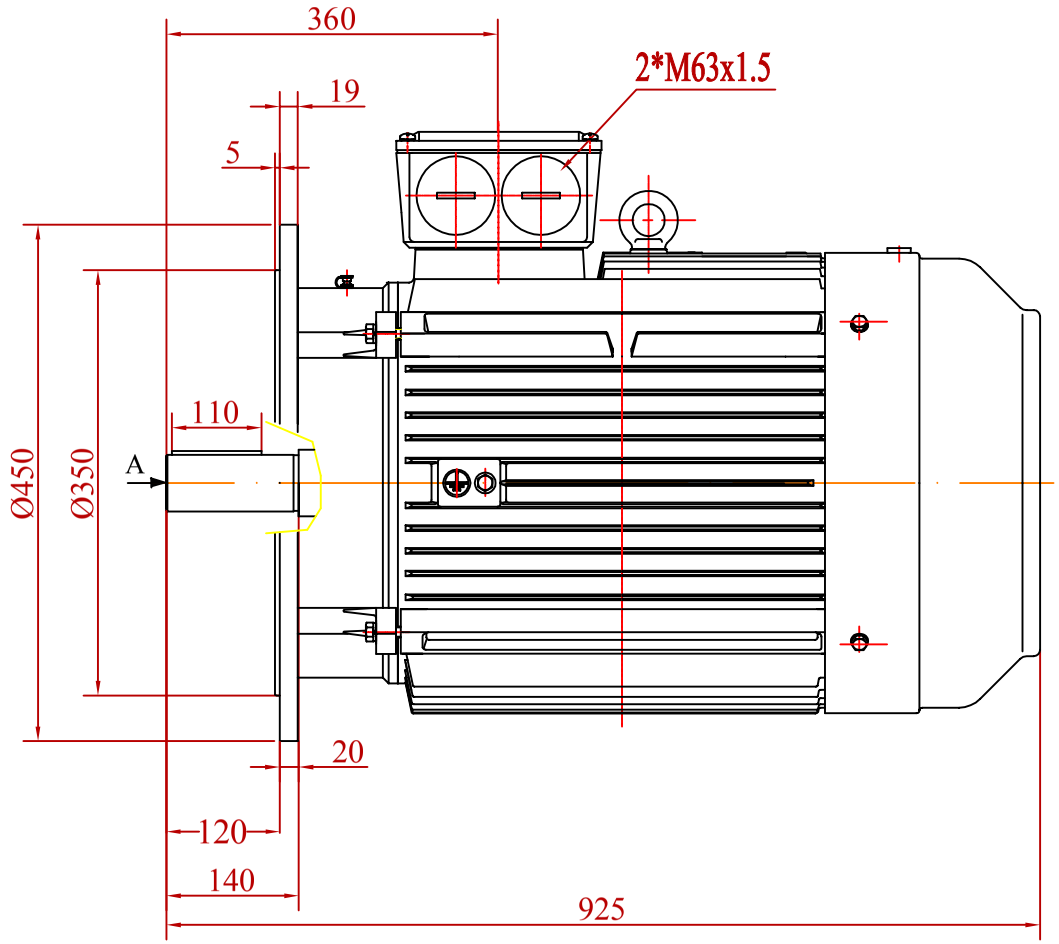

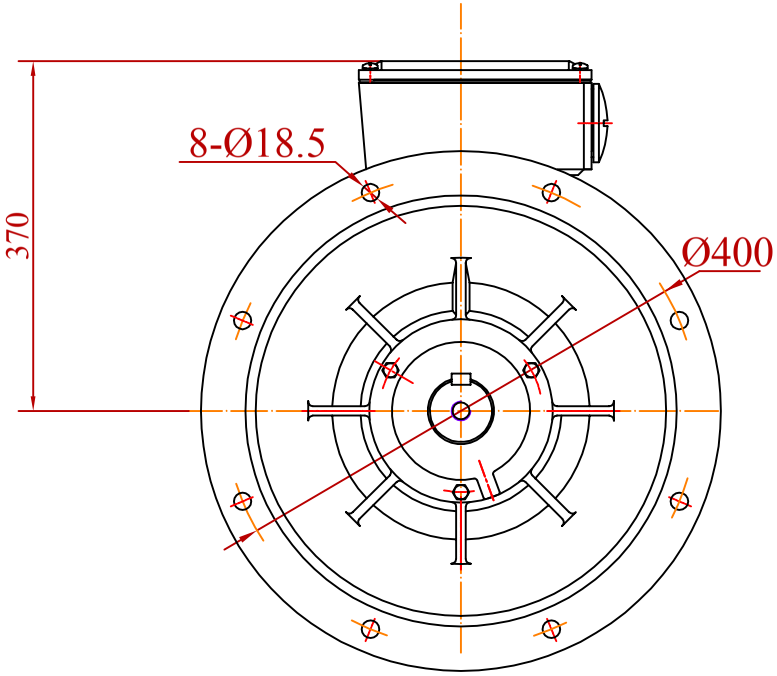

VIEW- A

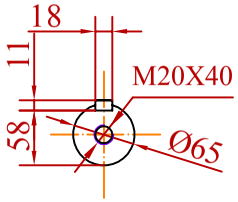

				Date	Signature
			Designed by	10/08/20	St.Karageorgis
			Checked by		
			Examine by		
Change	Date	Name			

VALIADIS
HELLENIC MOTORS

SCALE
1:8

Motor Type : K250M-4-6-8
Mounting : B5R

Design Number :
MWFRF-200810-62

Replaced from

Replace the