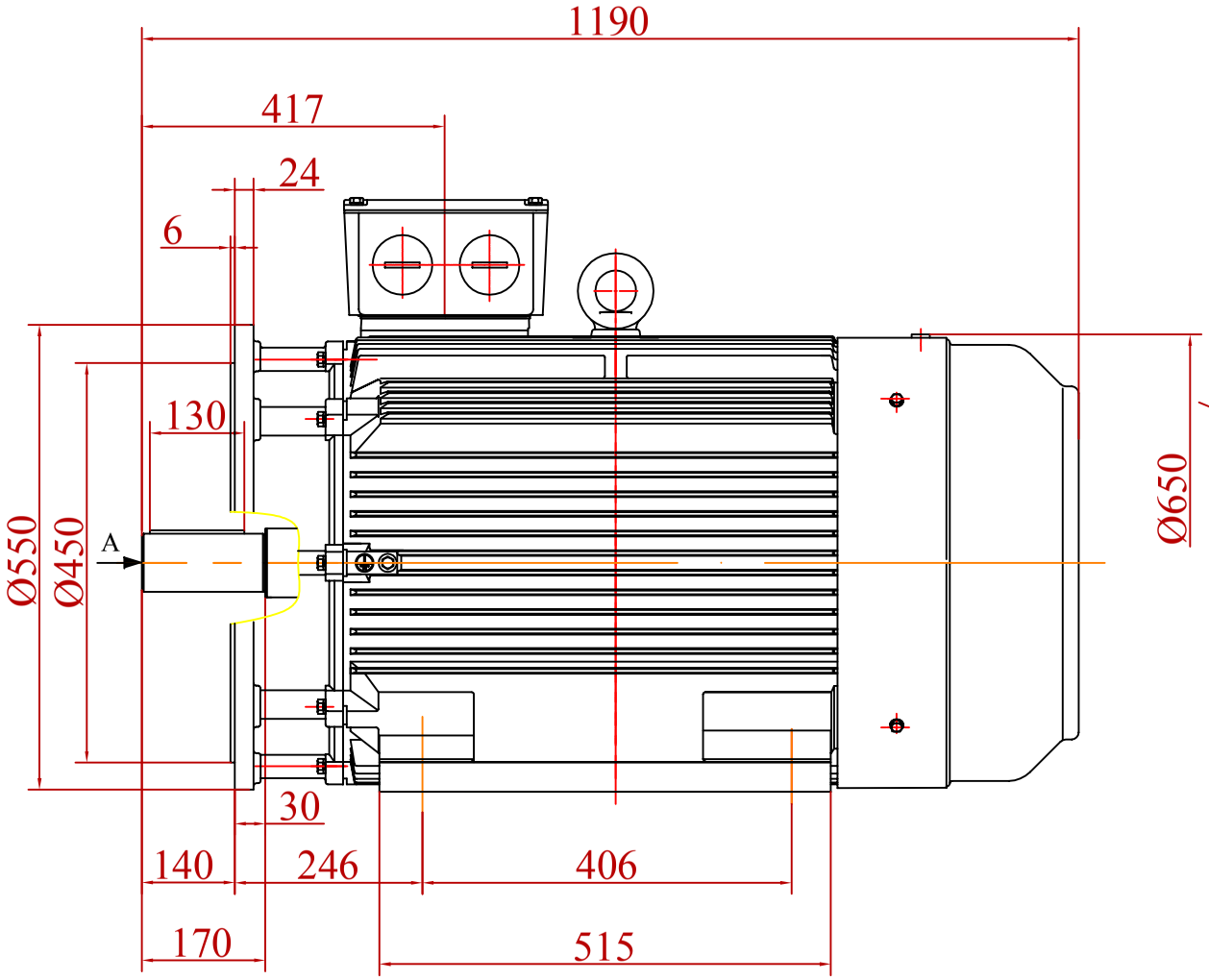

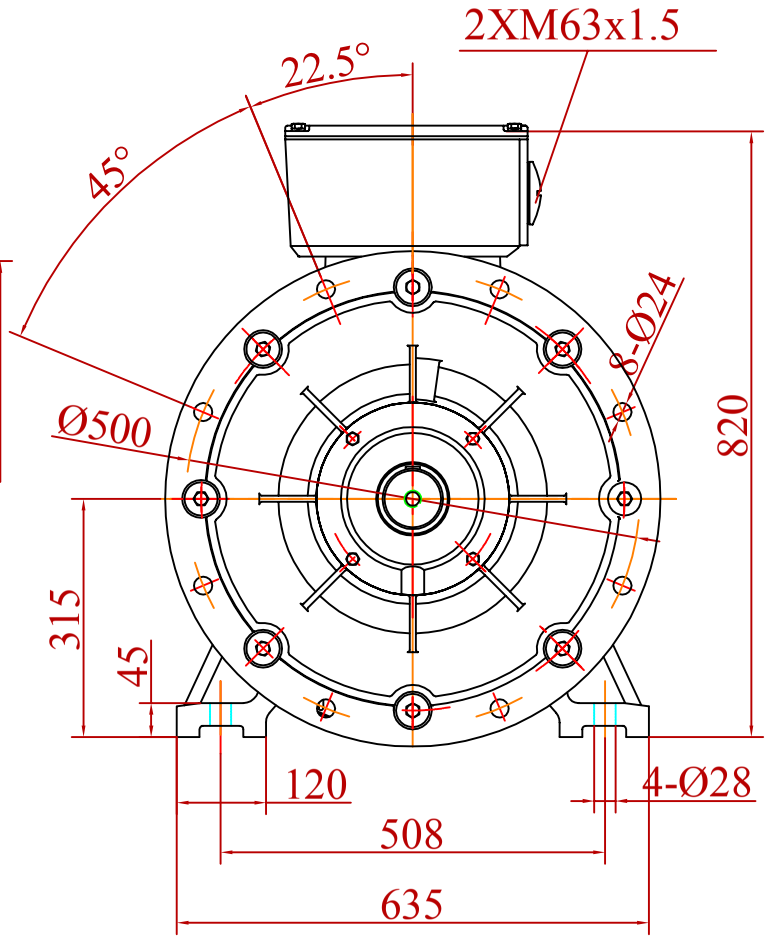

VIEW- A

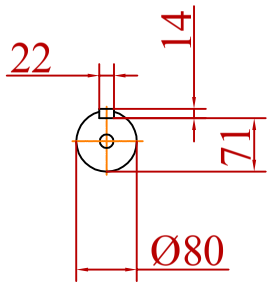

Change	Date	Name

	Date	Signature
Designed by	12/08/20	St.Karageorgis
Checked by		
Examine by		

VALIADIS
HELLENIC MOTORS

SCALE
1:10

Motor Type : K315S-4-6-8
Mounting : B35R

Design Number :
MWFRF-200812-3

Replaced from

Replace the