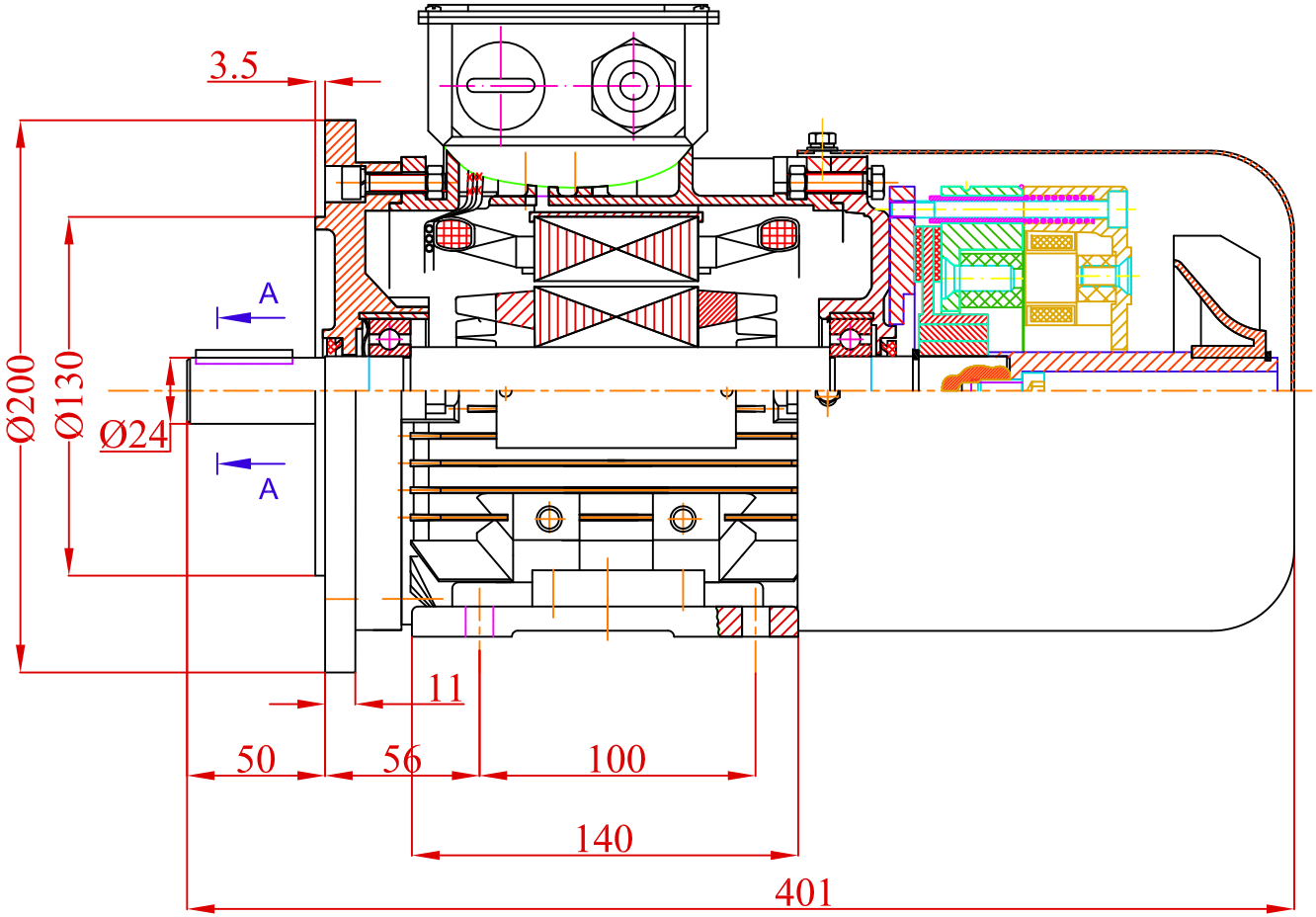

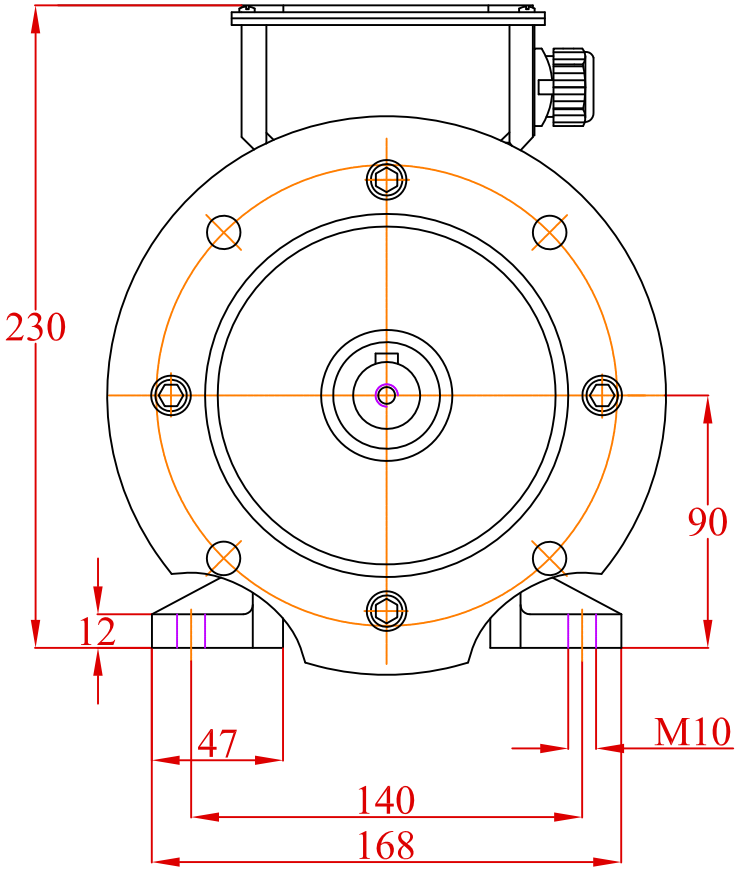

A-A
2:1

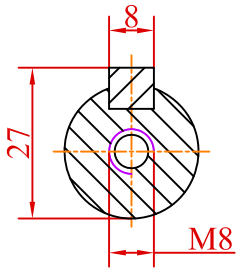

				Date	Signature	
			Designed by			Weight
			Checked by			
			Examine by			
			SCALE			
CHANGE	DATE	NAME				

VALIADIS
HELLENIC MOTORS

MOTOR TYPE : AK90S
MOUNTING : B35
with brake type : AC05

Design Number

Replaced from

Replace the