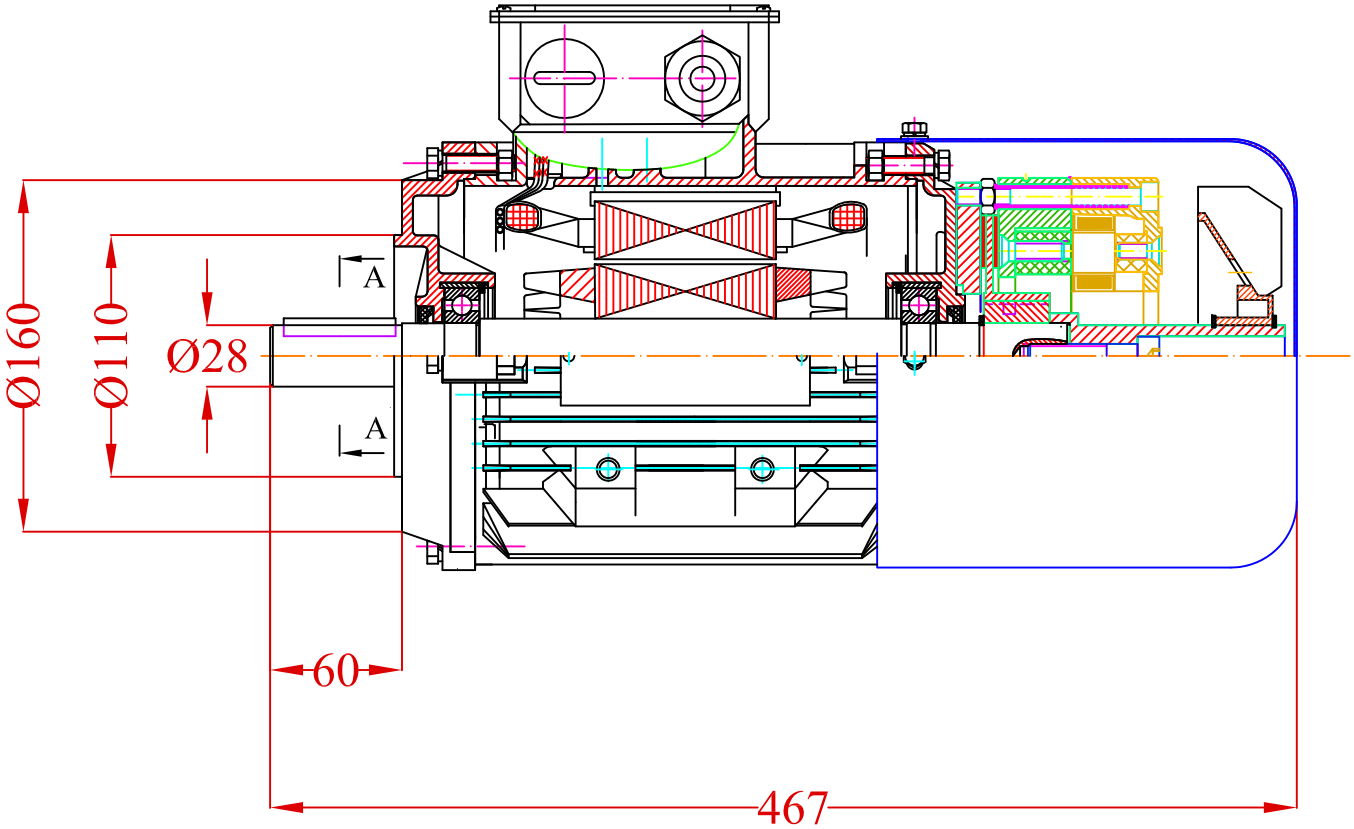

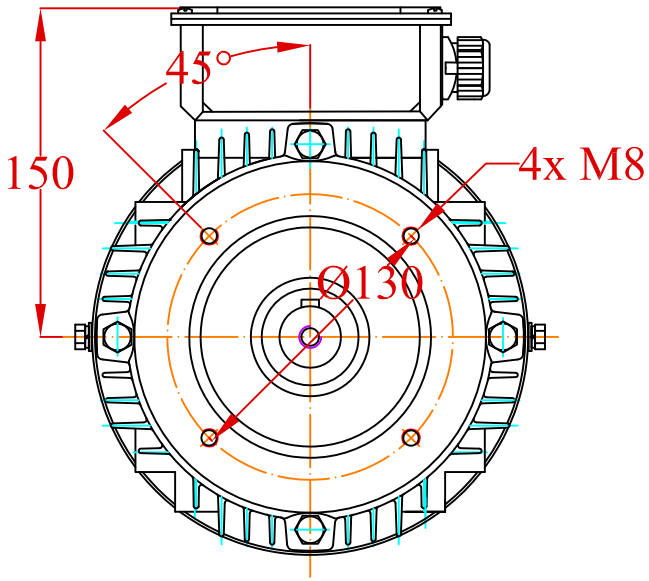

A-A

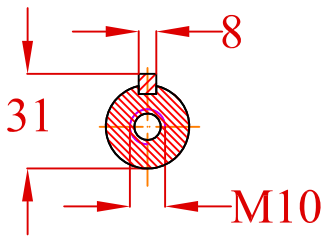

				Date	Signature	
			Designed by			
			Checked by			Weight
			Examine by			
			SCALE			
CHANGE	DATE	NAME				

VALIADIS
HELLENIC MOTORS

Motor Type : AK100L
Mounting : B14A
with brake type AC6

Design Number

Replaced from

Replace the