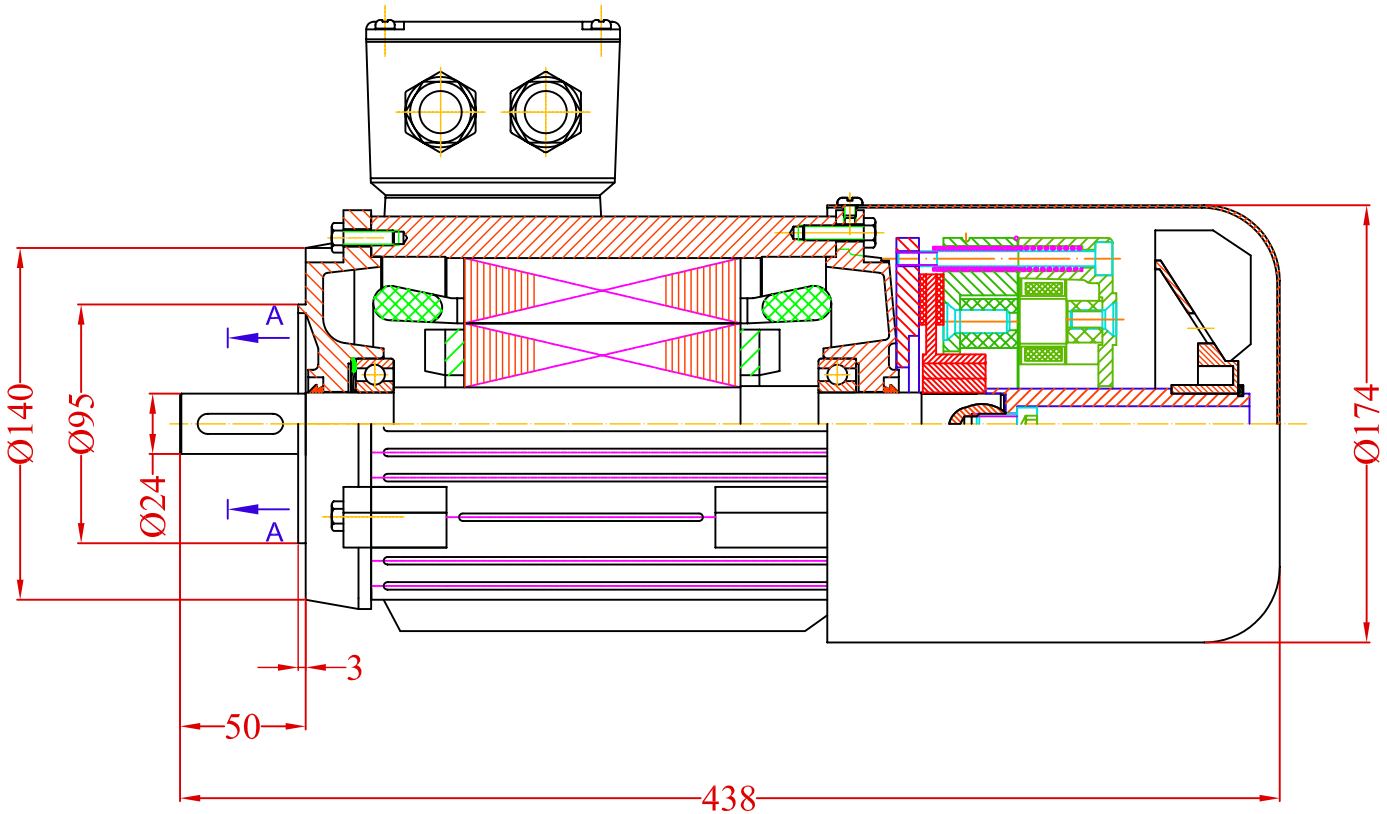

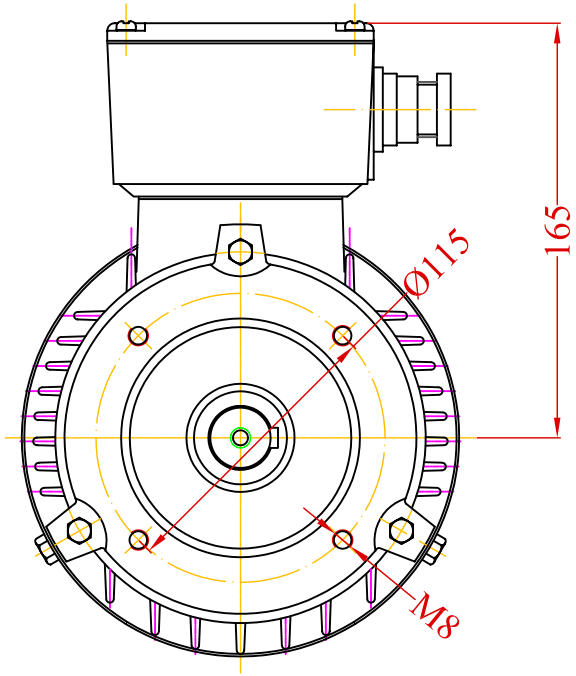

A-A

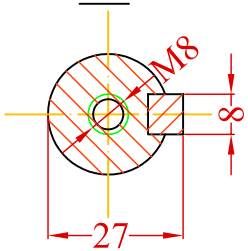

				Date	Signature		
			Designed by				VALIADIS HELLENIC MOTORS
			Checked by			Weight	
			Examine by				
			SCALE	MOTOR TYPE K90L MOUNTING B14A WITH BRAKE AC 05			Desing Number
							Replaced from
CHANGE	DATE	NAME					Replace the