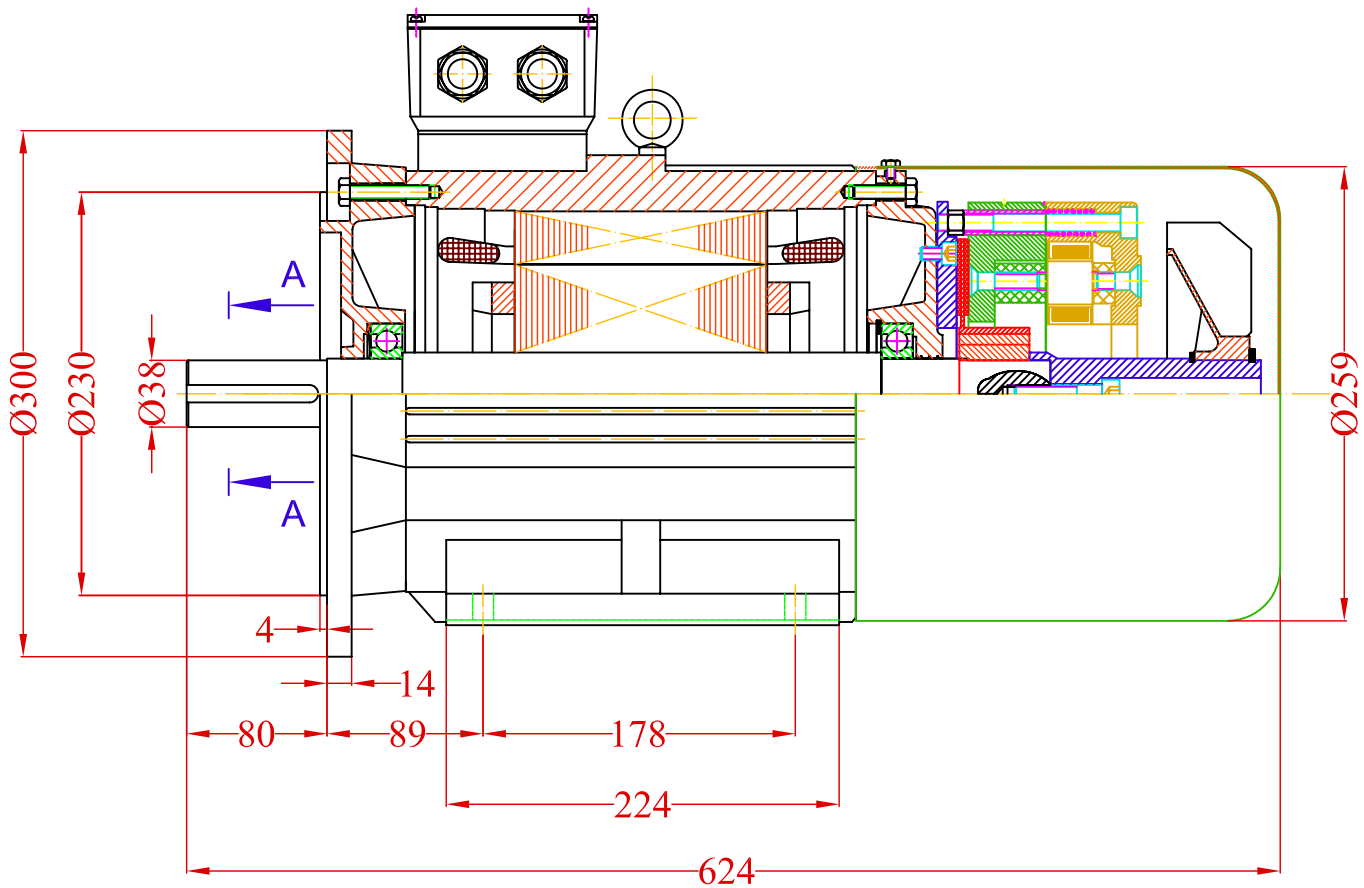

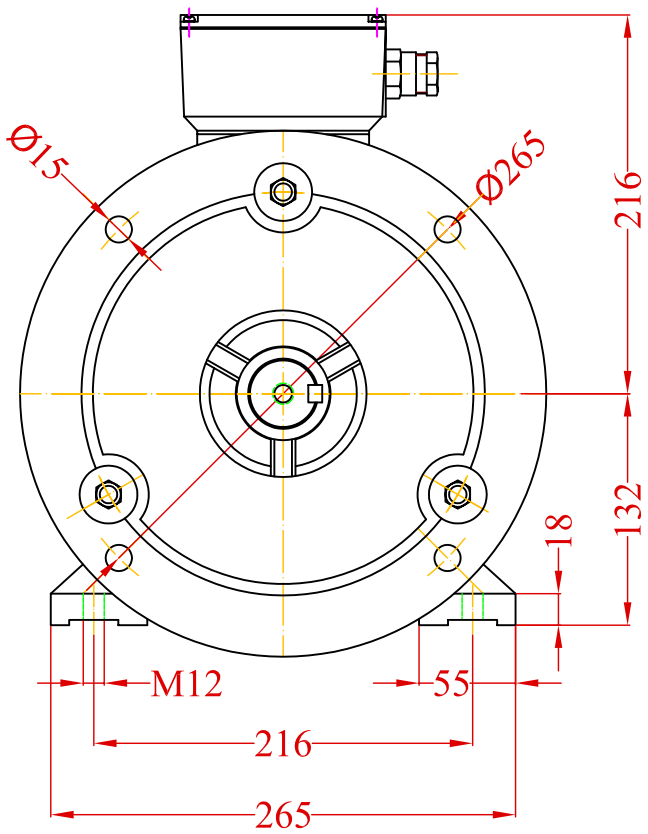

A-A

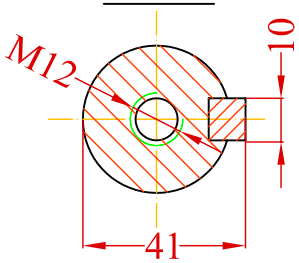

CHANGE	DATE	NAME

	Date	Signature	
Designed by			
Checked by			Weight
Examine by			
SCALE			

VALIADIS
HELLENIC MOTORS

MOTOR TYPE K132M
MOUNTING B35
WITH BRAKE AC08

Desing Number

Replaced from

Replace the