# PRODUCTCATALOGUE

VALIADIS
HELLENIC MOTORS

# Contents


Company presentation 5

**General information 9**

Standards & Specifications 11
Fundamentals 12
Connecting diagrams 13
Enclosure 15
Mounting arrangements 16
Permissible shaft loads 17
Electrical design 19
Energy Efficiency Norms 22

**K Series - CAST IRON MOTORS 35**

Technical characteristics 38
Dimension sheet 42
Bearings 49
Double speed motors 50
Terminal boxes 58
Brake kits 59
Forced cooling kit 60
Terminal plate 62
Fans 63

**AK Series – ALUMINUM MOTORS 67**

Technical characteristics 70
Dimension sheet 74
Bearings 79
Terminal boxes 80

**MK Series – SINGLE PHASE MOTORS 81**

Technical characteristics 85
Dimension sheet 86

**KA-A Series – VERTICAL HOLLOW SHAFT MOTORS (WP1) 89**

Technical characteristics 92
Bearings 92
Dimension sheet 93

**AB Series – OPEN DRIP PROOF MOTORS IP23 95**

Technical characteristics 98
Dimension sheet 102
Bearings 104

**KHV Series – MEDIUM VOLTAGE MOTORS IP55 (IC411) 105**

Technical characteristics 108
Dimension sheet 112
Bearings 112

**TMKHV Series – MEDIUM VOLTAGE MOTORS IP55 WITH TOP MOUNTED AIR TO AIR COOLER (IC611) 113**

Technical characteristics 116
Dimension sheet 120
Bearings 120

**AHV Series – MEDIUM VOLTAGE MOTORS IP23 121**

Technical characteristics 124
Dimension sheet 128
Bearings 128

**AHV-Δ & TMKHV-Δ Series – MEDIUM VOLTAGE THREE-PHASE SLIP RING MOTORS 129**

IP23 Technical characteristics 133
IP23 Dimension sheet 138
IP55 Technical characteristics 143
IP55 Dimension sheet 148

**KQR Series – LIQUID RESISTANCE STARTERS 153**

Technical characteristics 155
Dimension sheet 158

**KZR & KZ Series – THREE-PHASE CRANE MOTORS 161**

Technical characteristics 167
Carbon brush, Bearings 178
Dimension sheet 183

**KΔ Series – LOW VOLTAGE SLIP RING MOTORS 187**

Technical characteristics 190
Dimension sheet 194

**LS – INVERTERS 197**

**AUCOM – SOFT STARTERS 209**

# Valiadis Hellenic Motors SA

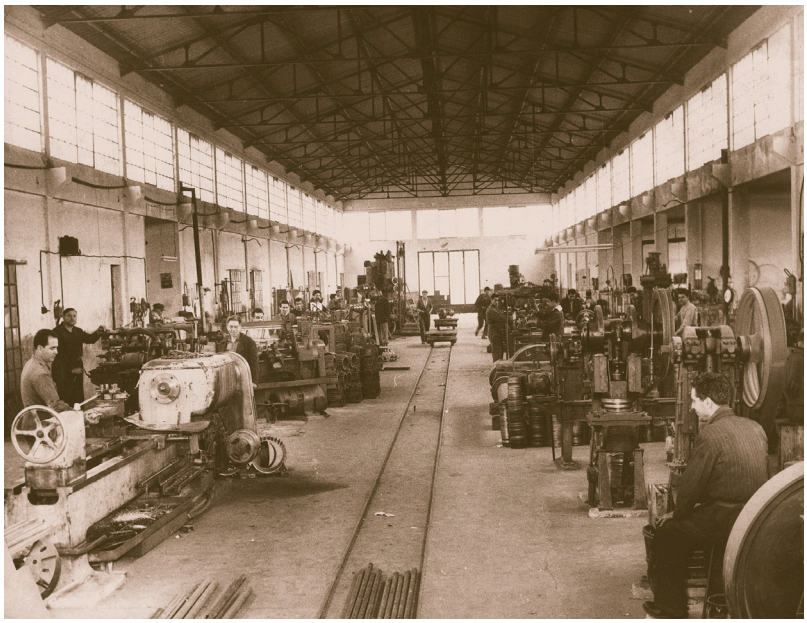

Since 1927 VALIADIS S.A. has been supplying the industry with standardized squirrel cage induction motors.
In 1994 VALIADIS S.A. expanded its product range. With this expansion it is possible to deliver a complete drives/transmission system, based on the exact selection and combination of the following products:

- VALIADIS electric motors
- Gearmotors
- Wormgear reducers
- Flameproof motors
- Brake Motors
- DC Motors
- Inverter Units
- Soft Starters
- Pump Sets

Today VALIADIS SA, is a full-service electric motor sales and repair facility, with main warehouse and offices in Athens, Greece, also owning a branch in Thessaloniki. We are the leader in supplying new medium and low voltage motors, featuring one of the largest inventories in Balkan Region.

# Valiadis Hellenic Motors SA

Our motors are in accordance with the IEC- and DIN standards. To guarantee a long service life and a fault-free operation, the electrical and mechanical execution of VALIADIS electric motors can be adjusted to specific working conditions and special applications. This also has led to production of special motors. We have new motors in stock, up to 630 HP for off-the-shelf delivery. Our cutting edge repair and service departments are unmatched in the industry. To ensure that quality comes first, we invest in state-of-the-art motor repair equipment. Our large inventory, testing capabilities, technological advancements and knowledgeable staff means we can modify any stock motor. We can add the latest enhancements to improve performance and reliability to meet any custom need you may have.

Both small and large series of VALIADIS electric motors are produced on an assembly line in the production facilities of Athens. Control measurements of the components are carried out in the assembly hall with the use of up-to-date calibrated measuring equipment. The assembly of standard and special motors is done by qualified personnel with the utmost precision and accuracy. All motors are being checked on good working conditions after assembly. Also the motors are subjected to a high voltage and no load test.

# Valiadis Hellenic Motors SA

Additional test procedures are carried out in the test field. This is where several motors can be tested with continuous or intermittent load, simultaneously. The electrical and mechanical characteristics are determined in this way. Motors that are used for “essential service” in shipping and offshore are being surveyed by a classification bureau in order to provide a certificate. VALIADIS S.A. also tests on request of a customer (or third party) and performs full load tests.

GENERAL INDUSTRIAL APPLICATIONS

Depending on specific demands there is a wide variety in the special executions program:

- Low noise and high efficiency executions
- Special bearing constructions
- Increased protection and insulation class
- Motors for intermittent duty
- Special shaft or flange designs

OFFSHORE AND SHIPPING

For this part of the market, motors are produced for on and below deck, with or without brakes attached and based on ambient temperatures up to 55°C. These motors meet the requirements of the shipping classification authorities and for ’essential service’ are provided with an official certificate issued by the classification bureau.

PETRO- AND CHEMICAL INDUSTRY

For hazardous areas our Explosion proof line is ATEX certified since 2001 from Italian institution of CESI. Explosion degree of our motors is: Eexd II B (or C) T3 (up to T6)

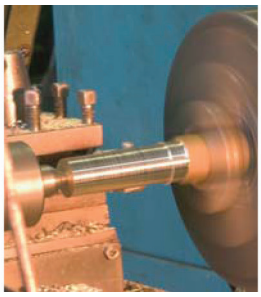
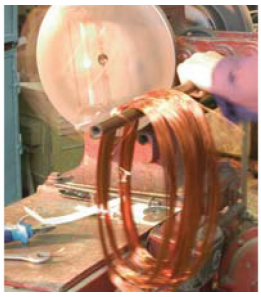

OUR COMPANY IS ISO 9001-2000 CERTIFIED FROM TÜV-GERMANY ALL OUR PRODUCTS ARE CE MARKED

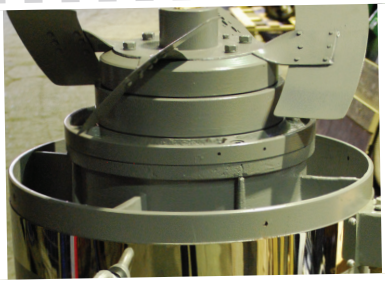

VALIADIS S.A. VALIADIS S.A. VALIADIS S.A. VALIADIS S.A.

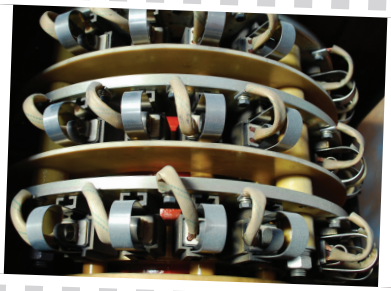

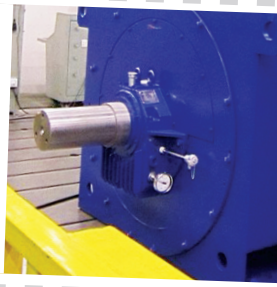

VALIADIS S.A. VALIADIS S.A. VALIADIS S.A. VALIADIS S.A. VAL

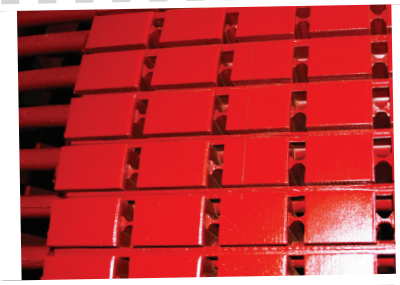

VALIADIS S.A. VALIADIS S.A. VALIADIS S.A. VALIADIS S.A.

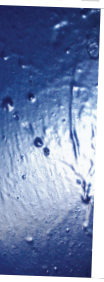

VALIADIS S.A. VALIADIS S.A. VALIADIS S.A. VALIADIS S.A.

VALIADIS S.A. VALIADIS S.A. VALIADIS S.A. VALIADIS S.A.

# General Information

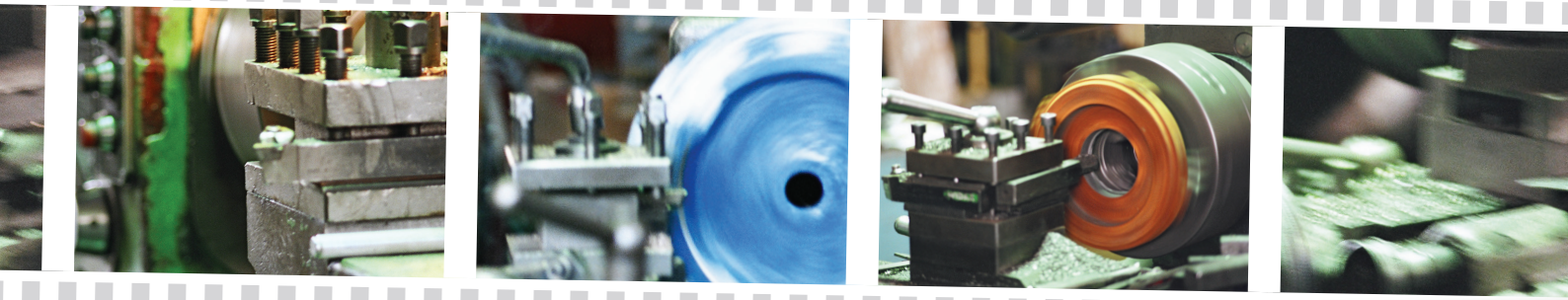
VALIADIS S.A.
VALIADIS S.A.
VALIADIS S.A.

VALIADIS S.A.
VALIADIS S.A.
VALIADIS S.A.
VALIADIS S.A.

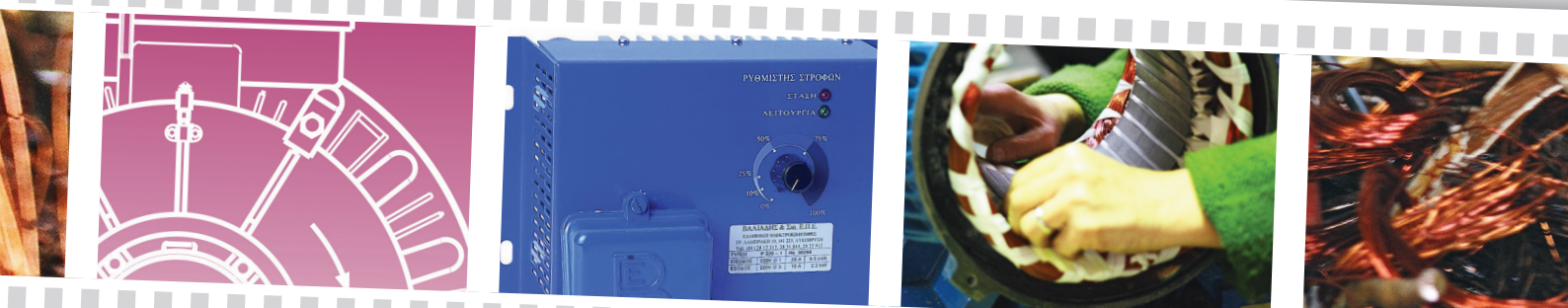
VALIADIS S.A.
VALIADIS S.A.
ΡΥΘΜΙΣΤΗΣ ΣΤΡΟΦΩΝ
ΣΤΑΣΗ
ΛΕΙΤΟΥΡΓΙΑ
VALIADIS S.A.
VALIADIS S.A.

VALIADIS S.A.
VALIADIS S.A.
VALIADIS S.A.
VALIADIS S.A.

VALIADIS S.A.
VALIADIS S.A.
VALIADIS S.A.
VALIADIS S.A.

# Standards and Specifications

The motors comply with all relevant international standards and specifications and in particular with:

| Title | DIN/DIN ISO | DIN EN | IEC | DIN VDE |
|---|---|---|---|---|
| Rotating electrical machines | | DIN EN 60 034-1 | IEC 60 034-1 | DIN VDE 0530-1 |
| Determination of losses and efficiency | DIN 57 530-2 | DIN EN 60 034-2 | IEC 60 034-2 | DIN VDE 0530-2 |
| IP enclosures | | DIN EN 60 034-5 | IEC 60 034-5 | DIN VDE 0530-05 |
| Classification of cooling system (IC code) | | DIN EN 60 034-6 | IEC 60 034-6 | DIN VDE 0530-06 |
| Mounting arrangement and installation (IM code) | | DIN EN 60 034-7 | IEC 60 034-6 | DIN VDE 0530-07 |
| Terminal designations and direction of rotation | | | IEC 60 034-8 | DIN VDE 0530-8 |
| Noise emission limit values | | DIN EN 60 034-9 | IEC 60 034-9 | DIN VDE 0530-09 |
| Installed thermal protection, protection requirements | | | IEC 60 034-11 | |
| Starting characteristics of 3phase motors with squirrel cage except pole-changing motors, for voltages up to and including 690V | | DIN EN 60 034-12 | IEC 60 034-12 | DIN VDE 0530-12 |
| Mechanical vibrations of certain machines with shaft heights of 56mm and higher | | DIN EN 60 034-14 | IEC 60 034-14 | DIN VDE 0530-14 |
| IEC standard voltages | | | DIN IEC 60 038 | |
| Centre holes 60o with thread | DIN 332-2 | | | |
| Cylindrical shaft ends for electrical machines | DIN 748-3 | | IEC 60 072 -2 | |
| Driver connections without torque | DIN 6885-1 | | | |
| Fixing dimensions and allocation of ratings | DIN 42 677-1 | | IEC 60 072 | |
| Mounting flanges for electrical machines | DIN 42 948 | | | |

# Fundamentals

**Three phase current**
Three phase current is characterised as following: the available three phase network carries individual alternating voltages of the same magnitude, but with a phase difference of 120° in time. The three supply connections of the three phase system are called L1, L2, and L3.
The same formulas apply to single phase motors, but without the factor √3.

**Rated output**
The rated output is indicated at the shaft of the motor :

$$Pn=\sqrt{3}*Vn*In*\cos\varphi*n \text{ [W]}$$

Where:
- Vn: Rated motor voltage [V]
- In: Rated motor current [Amps]
- Cosφ: Rated motor power factor
- n: Motor efficincy at full load

**Rated torque**
The rated torque is calculated as following:

$$Mn = 9{,}55 * Pn/nn \text{ [Nm]}$$

Where:
- Pn: Rated power [W]
- nn: Rated speed [Rpm]

to convert Nm to kpm you can use the formula 1Nm=1/9,81 kpm

**Speed**
The real speed of a motor corresponds to the synchronous speed less slip. The synchronous speed of the motor is depended only from the poles No and frequency according the following formula:

$$ns= f * 60/p \text{ [rpm]}$$

where:

- f: Frequency [Hz]
- p: Number of pole pairs

The nominal speed of the motor is then:

$$nn=ns*(1-s) \text{ [rpm]}$$

where:
- s: the motor slip
- ns: synchronous speed [rpm]

# Connecting diagrams

**Y or Star connection**

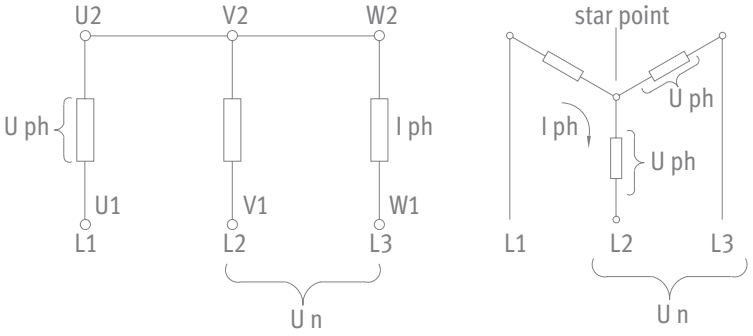


Connecting together the W2, U2, V2 terminals (star point) and connecting to the mains the U1, V1, W1 terminals a star connection is obtained.
The phase current Iph and the phase voltage Vph are as following :

$$Iph=In$$
$$Vph= Vn/\sqrt{3}$$

Where:

In: the line current
Vn: the line voltage

**Δ or Delta connection**

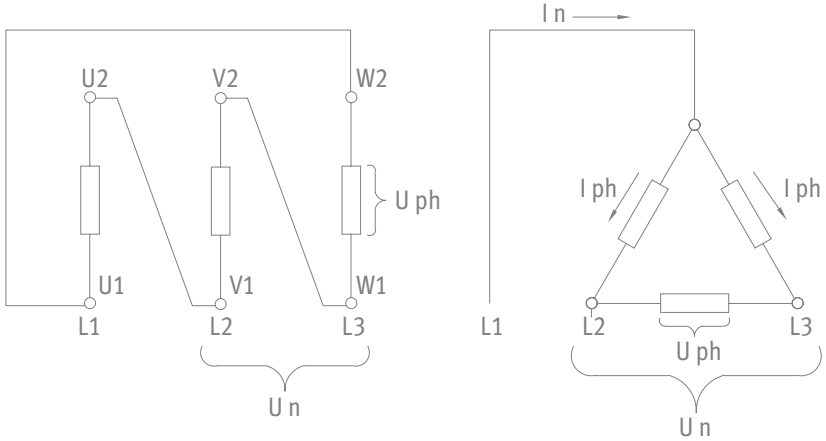


Connecting the end of each winding to the beginning of the next winding a delta connection is obtained.
The phase current Iph and the phase voltage Vph are as following:

$$Iph=In/\sqrt{3}$$
$$Vph= Vn$$

# Connecting diagrams

**Star-Delta starting**

The star-delta starting is an easy way to reduce the starting current and starting torque.
Motors can be started with the star-delta method only when the supply voltage corresponds to the rated voltage of the motors in delta connection.

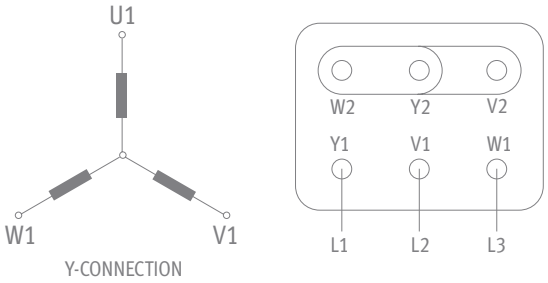


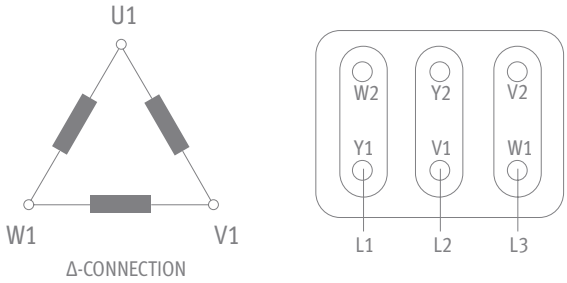


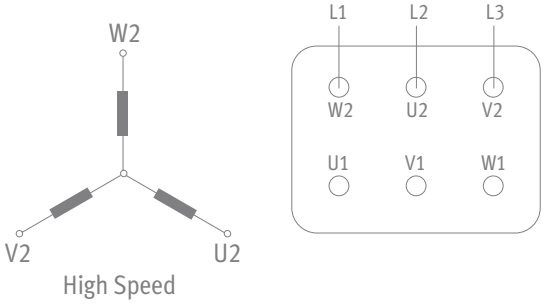


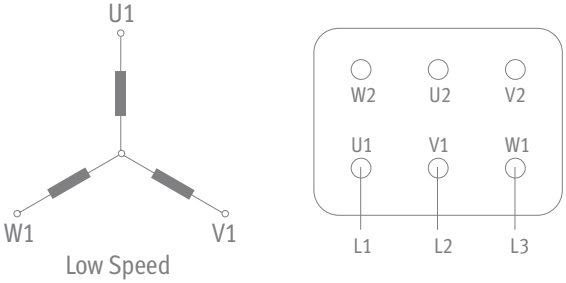


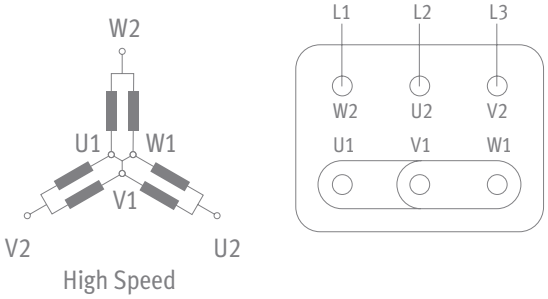


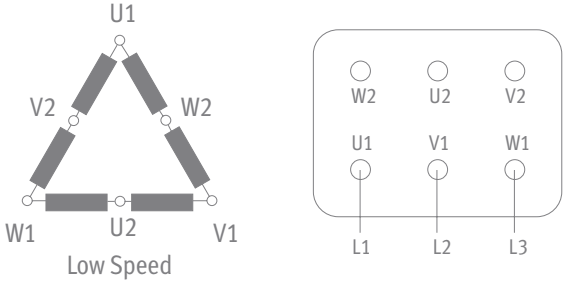

# Enclosure

### Installation

The motors can be installed outdoors and in dusty and chemically aggressive environment (industrial climate) at ambient temperature from -20 to +40oC.

### Mechanical protection

The mechanical protection systems for electric motors are classified with the IP code followed by 2 numbers and (in some cases) by a letter.

### IP (International protection)

1st digit: 0-6
It stands for the kind of protection against accidental contacts of foreign bodies.
2nd digit: 0-8
It stands for the kind of protection against water

| Enclosure | Protection against accidental contact and penetration of foreign bodies. | Protection against water. |
|---|---|---|
| IP23: Standard design for series AB, KA-A, AKHV | Protected against solid objects over 12mm (e.g. fingers) | Protected against rain water at an inclination up to 60°. |
| IP54 | Complete protection to prevent contact with live parts and approaching live parts as well as contact with moving parts inside the enclosure. Protection against harmful dust deposits. No complete protection against dust, but sufficiently protected to maintain satisfactory operation of the machine. | Motor will not be damaged by splashing water |
| IP55: Standard design for series K,AK, MK KHV, TMKHV | | A jet of water from a nozzle, pointed at the motors from any direction, will not damage the motor. |
| IP56: (option for K,AK, MK, KHV, TMKHV) | | Protection is sufficient to prevent a damaging amount of water from entering the enclosure if the motor is exposed to heavy sea movement or if a concentrated jet of water is directed at the motor. |
| IP65 (option for K,AK,,MK) Acc. DIN 40 050/ July 1980 (first ID no [6] dustproof, not contained in DIN IEC 34 Pt 5). | Complete protection to prevent contact with live parts and approaching live parts as well as contact with moving parts inside the enclosure. Sealed to prevent ingress of dust (dust proof). | A jet of water from a nozzle, pointed at the motors from any direction, will not damage the motor. |

# Mounting arrangements

The most commonly used mounting arrangements are shown in the table below.
Other mounting arrangements are available on request.

Mounting arrangement of each motor is stated on the name plate.
Standard motors ordered in basic mounting arrangements (universal mounting arrangements) IM B3, IM B5, IM B14 can also be used in the following mounting positions:

IM B3 in: IM B6, IM B7, IM B8, IM V5 or IM V6.
IM B5 in: IM V1 or IM V3. [with the exception of special designs where bearings series 7000 are used for vertical mountings V1 & V3]
IM B14 in: IM V18 or IM V19.

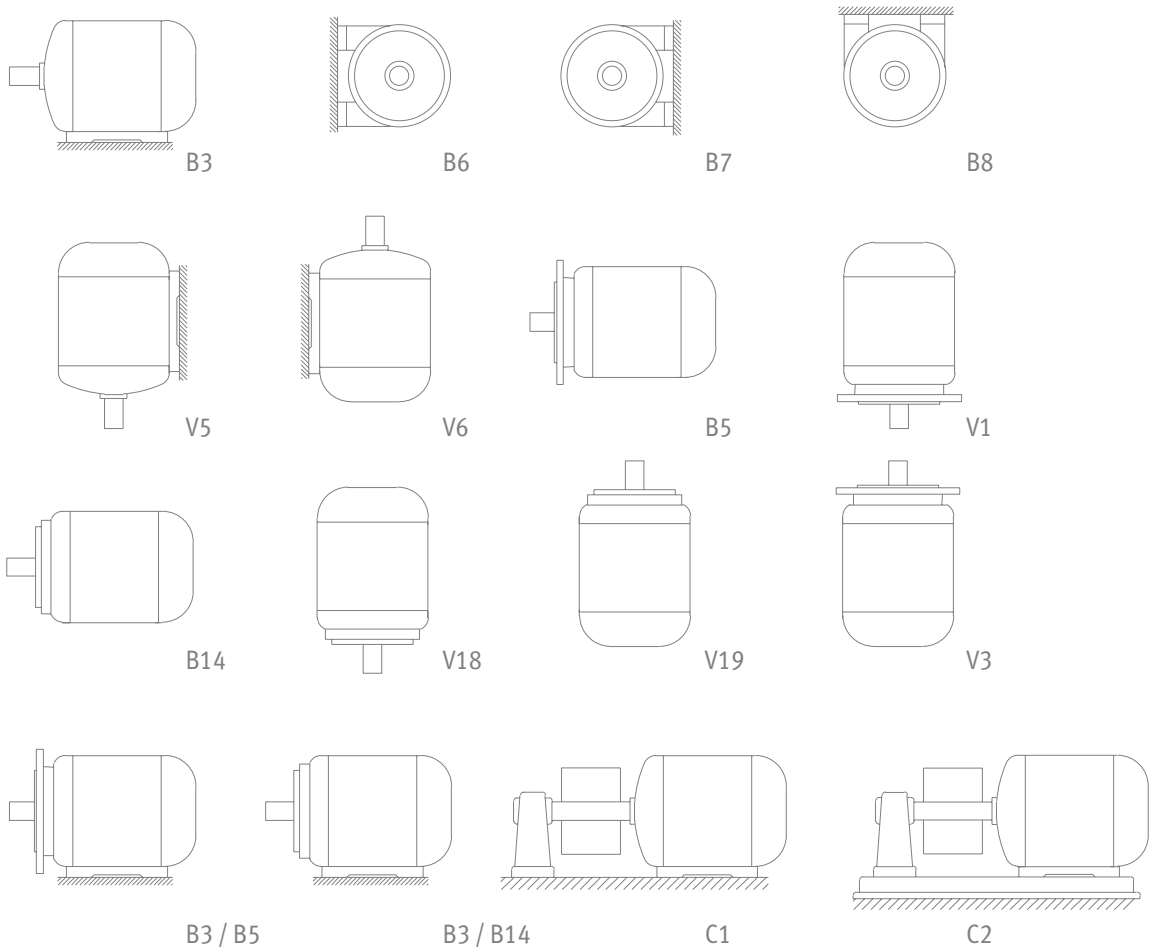


Please be aware that large 315 & 355 frame flange-mounted motors may not be able to support the weight adequately. Therefore, it is advisable to opt for B35 (foot & flange) mounted motors instead.

# Permissible radial loads on the shaft

The following table gives the permissible radial force in Newton, assuming zero axial force and standard ball bearings. In case of higher radial force than given in the table an reinforced bearing should be ordered. The values are based on normal conditions at 50Hz and calculated at 20.000 working hours for the 2-pole motors and 40.000 working hours for the 4p, 6p, 8p motors.
For 60Hz the value must be reduced by 10%.
For two speed motors, the values have to be based at the higher speed.

In order to calculate the actual force on a motor shaft, we use the following formula: $F = \frac{2 * K * M}{D}$ [Nt]

Where:
M: is the rated torque of the motor $\frac{9550 * P(kW)}{m(Rpm)}$
D: is the pulley diameter [m]
K: belt tension factor. K=2.2 - 3 for V-belts or flat belts.

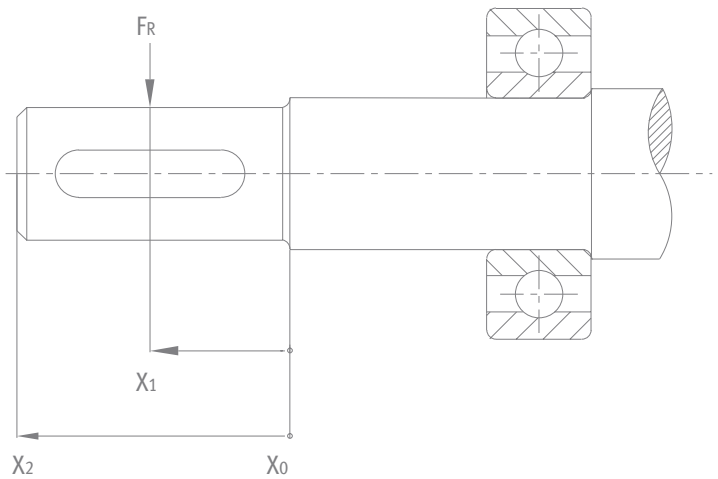


| Frame size | Pole | Permissible radial load | | |
|---|---|---|---|---|
| | | At Xo | At X1/2 | At Xmax |
| 56 | 2,4 | 250 | 180 | 100 |
| 63 | 2,4 | 360 | 300 | 230 |
| 71 | 2,4,6 | 470 | 400 | 320 |
| 80 | 2 | 640 | 590 | 540 |
| | 4 | 640 | 580 | 540 |
| | 6 | 730 | 660 | 610 |
| | 8 | 800 | 730 | 670 |
| 90 | 2 | 730 | 660 | 610 |
| | 4 | 720 | 660 | 600 |
| | 6 | 820 | 750 | 680 |
| | 8 | 910 | 820 | 750 |
| 100 | 2 | 1020 | 910 | 830 |
| | 4 | 1010 | 910 | 820 |
| | 6 | 1150 | 1030 | 940 |
| | 8 | 1270 | 1140 | 1030 |
| 112 | 2 | 1480 | 1350 | 1240 |
| | 4 | 1470 | 1340 | 1230 |
| | 6 | 1680 | 1530 | 1410 |
| | 8 | 1850 | 1680 | 1550 |

| Frame size | Pole | Permissible radial load | | |
|---|---|---|---|---|
| | | At Xo | At X1/2 | At Xmax |
| 132 | 2 | 2160 | 1900 | 1690 |
| | 4 | 2140 | 1910 | 1720 |
| | 6 | 2450 | 2190 | 1970 |
| | 8 | 2700 | 2410 | 2180 |
| 160 | 2 | 2790 | 2470 | 2210 |
| | 4 | 2770 | 2450 | 2190 |
| | 6 | 3150 | 2790 | 2490 |
| | 8 | 3480 | 3080 | 2750 |
| 180 | 2 | 3130 | 2790 | 2510 |
| | 4 | 3070 | 2740 | 2470 |
| | 6 | 3500 | 3120 | 2810 |
| | 8 | 3870 | 3450 | 3110 |
| 200 | 2 | 4160 | 3730 | 3390 |
| | 4 | 4130 | 3700 | 3360 |
| | 6 | 4690 | 4210 | 3820 |
| | 8 | 5190 | 4650 | 4220 |
| 225 | 2 | 4700 | 4260 | 3890 |
| | 4 | 4620 | 4080 | 3650 |
| | 6 | 5250 | 4630 | 4150 |
| | 8 | 5820 | 5130 | 4590 |

| Frame size | Pole | Permissible radial load | | |
|---|---|---|---|---|
| | | At Xo | At X1/2 | At Xmax |
| 250 | 2 | 5260 | 4660 | 4180 |
| | 4 | 5180 | 4590 | 4120 |
| | 6 | 5890 | 5220 | 4690 |
| | 8 | 6520 | 5780 | 5190 |
| 280 | 2 | 5500 | 5000 | 4600 |
| | 4 | 5650 | 5150 | 4700 |
| | 6 | 6800 | 6300 | 5700 |
| | 8 | 7700 | 7200 | 6500 |
| 315 | 2 | 5500 | 5000 | 4600 |
| | 4 | 6200 | 5700 | 5200 |
| | 6 | 7350 | 6700 | 6150 |
| | 8 | 8350 | 7600 | 6950 |
| 355 | 2 | 12500 | 12000 | 11750 |
| | 4 | 28300 | 25860 | 14290 |
| | 6 | 32400 | 29600 | 16350 |
| | 8 | 35660 | 32580 | 18000 |
| 400 | 2 | | | |
| | 4 | 33730 | 31140 | 19280 |
| | 6 | 38610 | 35650 | 22070 |
| | 8 | 42500 | 39240 | 24290 |

# Permissible axial loads on the shaft

The following table gives the permissible axial forces in Nt, assuming zero radial force. In case axial & radial forces apply together, please consult our engineering department. For higher axial forces, it is possible to execute the motors with angular contact bearings. The values are based for normal conditions at 50Hz and calculated at 20.000 working hours for 2-pole motors and 40.000 working hours for 4p, 6p, 8p motors. At 60Hz, the values must be decreased by 10%. For double speed motors the values have to be based at the higher speed.
KA-A motors have their own table for permissible axial loads, since angular contact bearings are standard for this series.

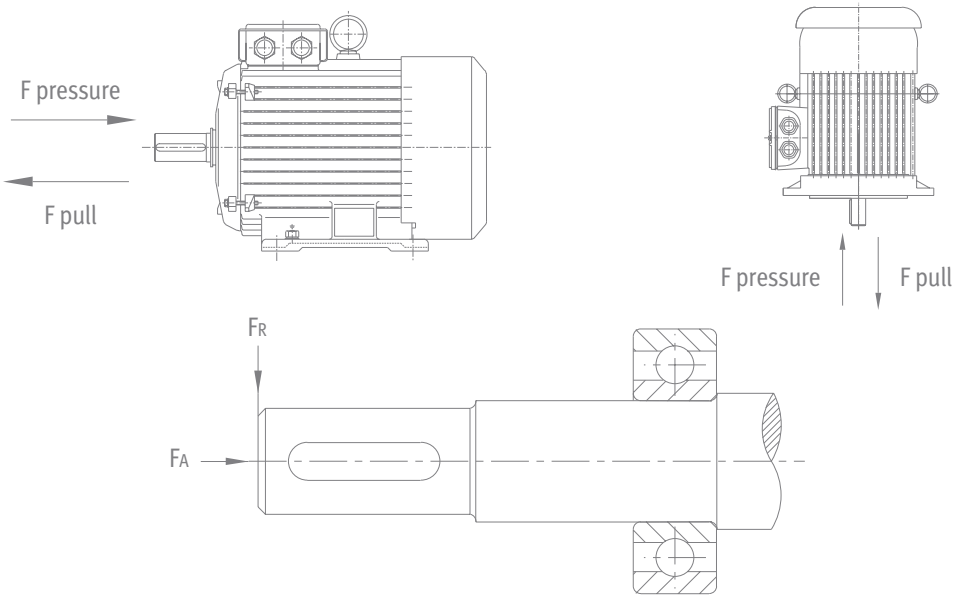


| Maximum axial force [N] | | | | | |
|---|---|---|---|---|---|
| Frame size | Pole | B3 Push | B3 Pull | V1 Push | V1 Pull |
| 56 | 2,4 | 200 | 200 | 230 | 180 |
| 63 | 2,4 | 250 | 250 | 260 | 230 |
| 71 | 2,4,6 | 270 | 270 | 290 | 255 |
| 80 | 2 | 380 | 380 | 400 | 360 |
| | 4 | 470 | 470 | 490 | 450 |
| | 6 | 590 | 590 | 620 | 560 |
| | 8 | 620 | 620 | 650 | 595 |
| 90 | 2 | 440 | 440 | 470 | 410 |
| | 4 | 550 | 550 | 600 | 510 |
| | 6 | 620 | 620 | 680 | 460 |
| | 8 | 640 | 640 | 700 | 580 |
| 100 | 2 | 610 | 610 | 670 | 570 |
| | 4 | 750 | 750 | 840 | 710 |
| | 6 | 880 | 880 | 970 | 820 |
| | 8 | 895 | 895 | 970 | 845 |
| 112 | 2 | 1220 | 1220 | 1300 | 1170 |
| | 4 | 1440 | 1440 | 1520 | 1370 |
| | 6 | 1650 | 1650 | 1740 | 1580 |
| | 8 | 1780 | 1780 | 1880 | 1710 |
| | | | | | |

| Maximum axial force [N] | | | | | |
|---|---|---|---|---|---|
| Frame size | Pole | B3 Push | B3 Pull | V1 Push | V1 Pull |
| 132 | 2 | 1500 | 1500 | 1620 | 1430 |
| | 4 | 1780 | 1780 | 1970 | 1610 |
| | 6 | 1820 | 1820 | 2000 | 1660 |
| | 8 | 1920 | 1920 | 2100 | 1760 |
| 160 | 2 | 1650 | 1650 | 1950 | 1350 |
| | 4 | 2100 | 2100 | 2470 | 1720 |
| | 6 | 2450 | 2450 | 2800 | 2050 |
| | 8 | 2650 | 2650 | 3050 | 2210 |
| 180 | 2 | 2100 | 2100 | 2450 | 1720 |
| | 4 | 2600 | 2600 | 3200 | 2000 |
| | 6 | 2900 | 2900 | 3510 | 2280 |
| | 8 | 3170 | 3170 | 3780 | 2550 |
| 200 | 2 | 2400 | 2400 | 2940 | 1840 |
| | 4 | 3120 | 3120 | 3850 | 2390 |
| | 6 | 3480 | 3480 | 4350 | 2610 |
| | 8 | 3950 | 3950 | 4810 | 3090 |
| 225 | 2 | 2720 | 2720 | 3420 | 2020 |
| | 4 | 3480 | 3480 | 4370 | 2590 |
| | 6 | 3890 | 3890 | 5040 | 2820 |
| | 8 | 4330 | 4330 | 5330 | 3330 |

| Maximum axial force [N] | | | | | |
|---|---|---|---|---|---|
| Frame size | Pole | B3 Push | B3 Pull | V1 Push | V1 Pull |
| 250 | 2 | 3100 | 3100 | 3940 | 2260 |
| | 4 | 3900 | 3900 | 5000 | 2800 |
| | 6 | 4450 | 4450 | 5570 | 3230 |
| | 8 | 4980 | 4980 | 6380 | 3580 |
| 280 | 2 | 5300 | 3100 | 6500 | 2100 |
| | 4 | 6300 | 4400 | 7800 | 3000 |
| | 6 | 6700 | 4300 | 7900 | 2900 |
| | 8 | 7100 | 5020 | 9100 | 3520 |
| 315 | 2 | 5900 | 3800 | 8000 | 2000 |
| | 4 | 7100 | 5100 | 10700 | 3150 |
| | 6 | 7600 | 5800 | 11800 | 3500 |
| | 8 | 8100 | 6300 | 12500 | 4400 |
| 355 | 2 | 6100 | 1850 | 14000 | 800 |
| | 4 | 9800 | 3900 | 18300 | 2500 |
| | 6 | 10500 | 4700 | 20700 | 3500 |
| | 8 | 12500 | 6000 | 21500 | 3600 |
| 400 | 2 | | | | |
| | 4 | 11200 | 3900 | 18500 | 1600 |
| | 6 | 12500 | 4800 | 19500 | 2200 |
| | 8 | 12800 | 4950 | 21500 | 2900 |

# Electrical design

### Voltage and frequency

The low voltage motors in this catalogue are delivered for a standard voltage of 230, 400 or 690V according to DIN IEC 38 or for a rated voltage on 50Hz systems.
The motors can run with the variations envisaged in normal operational areas at a voltage of ±5% and frequency of ±2%.
Furthermore, the motors can be used in the operational area with restrictions (variation in voltage of ±10% and frequency of ±3%) as long as the indications given by norm 60034-1 are complied with.

### Increased voltage & frequency (60Hz systems)

If the motors are supplied with increased voltage in proportion to the rated frequency (e.g. 480V/60Hz instead of 400V/50Hz), then :
The rated power and speed are increased by 20%
All other values remain unchanged

Of course, 480V is not a common voltage. In most cases, 60Hz systems works with a voltage of 440V. Hence, not all motors can accommodate a power increase of 20%. For an estimate, it should be assumed that the power increase is only 15%.

### Output

The rated outputs and operating characteristics given in the performance data refer according to IEC 60034-1 to:

- Continuous duty S1
- Frequency of 50Hz
- Rated voltage
- Maximum ambient temperature of 40oC
- Maximum height of installation of 1000m above sea level

Motors can also be operated in ambient temperatures above 40oC (up to 60oC) or at altitudes higher than 1000m but in these cases, derating has to be calculated. [Please consult our engineering department for such cases].

# Electrical design

## Efficiency and power factor at partial load

The efficiency and power factor values shown in the performance data refer to rated output at 50Hz. Values at partial load are given below for reference only:

| Efficiency in % at | | | | Power factor at | | | |
|---|---|---|---|---|---|---|---|
| 1/2 | 3/4 | 4/4 | 5/4 | 1/2 | 3/4 | 4/4 | 5/4 |
| of the full load | | | | of the full load | | | |
| 94 | 95 | 96 | 95 | 0,85 | 0,91 | 0,93 | 0,93 |
| 93 | 94 | 95 | 94 | 0,84 | 0,9 | 0,92 | 0,92 |
| 92 | 93 | 94 | 93 | 0,81 | 0,88 | 0,91 | 0,91 |
| 91 | 92 | 93 | 92 | 0,8 | 0,87 | 0,9 | 0,91 |
| 91 | 92 | 92 | 91 | 0,77 | 0,86 | 0,89 | 0,9 |
| 89 | 91 | 91 | 90 | 0,75 | 0,84 | 0,88 | 0,89 |
| 88 | 90 | 90 | 88 | 0,73 | 0,83 | 0,87 | 0,88 |
| 87 | 89 | 89 | 87 | 0,71 | 0,81 | 0,86 | 0,88 |
| 86 | 88 | 88 | 86 | 0,69 | 0,8 | 0,85 | 0,87 |
| 85 | 87 | 87 | 84 | 0,68 | 0,79 | 0,84 | 0,87 |
| 85 | 86 | 86 | 84 | 0,67 | 0,78 | 0,83 | 0,86 |
| 84 | 86 | 85 | 83 | 0,65 | 0,77 | 0,82 | 0,85 |
| 83 | 85 | 84 | 82 | 0,64 | 0,75 | 0,81 | 0,85 |
| 82 | 84 | 83 | 81 | 0,62 | 0,74 | 0,8 | 0,84 |
| 80 | 82 | 82 | 80 | 0,61 | 0,72 | 0,79 | 0,83 |
| 79 | 81 | 81 | 79 | 0,6 | 0,71 | 0,78 | 0,82 |
| 78 | 80 | 80 | 78 | 0,58 | 0,7 | 0,77 | 0,81 |
| 77 | 79 | 79 | 77 | 0,57 | 0,69 | 0,76 | 0,8 |
| 75 | 78 | 78 | 76 | 0,55 | 0,67 | 0,75 | 0,79 |
| 74 | 77 | 77 | 75 | 0,54 | 0,66 | 0,74 | 0,79 |
| 73 | 76 | 76 | 74 | 0,53 | 0,65 | 0,73 | 0,78 |
| 72 | 75 | 75 | 73 | 0,52 | 0,63 | 0,72 | 0,77 |
| 71 | 74 | 74 | 72 | 0,5 | 0,62 | 0,71 | 0,76 |
| 70 | 73 | 73 | 71 | 0,49 | 0,61 | 0,7 | 0,75 |
| 68 | 72 | 72 | 70 | 0,48 | 0,59 | 0,69 | 0,74 |
| 67 | 71 | 71 | 69 | 0,47 | 0,58 | 0,68 | 0,74 |
| 66 | 70 | 68 | 68 | 0,46 | 0,57 | 0,67 | 0,73 |
| 65 | 69 | 67 | 67 | 0,45 | 0,56 | 0,66 | 0,72 |
| 64 | 67 | 66 | 66 | 0,44 | 0,55 | 0,65 | 0,71 |
| 62 | 66 | 65 | 65 | 0,43 | 0,54 | 0,64 | 0,7 |
| 61 | 65 | 64 | 64 | 0,42 | 0,53 | 0,63 | 0,69 |
| 60 | 64 | 63 | 63 | 0,41 | 0,52 | 0,62 | 0,68 |
| 59 | 63 | 62 | 62 | 0,4 | 0,51 | 0,61 | 0,67 |

## Insulation and temperature rise

All motors are manufactured with materials that comply with insulation class F. At the rated output and mains operation standard single speed motors have temperature rises that are within the limits of class B. Motor made in smaller frame (than standard) [FR-Frame reduced motors or compact motors] and pole changing motors normally have temperature rise within F class limit.

# Electrical design

## Space heater

Upon request all motors, can be equipped with a space heater to protect the inside of the motor against condensed water. Usually rated voltage of this heater is 230V, but on request any low voltage is possible (e.g. 110V). Space heater must be turned on when the motor is stoped and must be switched off during motor operation. Alternatively, it is possible to heat the stator by applying a low single phase voltage to terminals U1 and V1. (5-10% of the rated motor voltage).

| Frame size | Heater power [W] |
|---|---|
| 56 | 10 |
| 63 | 12 |
| 71 | 15 |
| 80 | 20 |
| 90 | 25 |
| 100 | 30 |
| 112 | 40 |
| 132 | 50 |
| 160 | 120 |
| 180 | 180 |
| 200 | 200 |
| 225 | 200 |
| 250 | 220 |
| 280 | 250 |
| 315 | 280 |
| 355 | 300 |
| 400 | 350 |

## Protection devices

In order to protect a motor winding against thermal overloads one of the following devices can be provided:

Bimetallic type device:
It consists of 3 motor protectors connected in series. The contact is normally closed; the disc opens when the windings temperature reaches limits dangerous for the insulation system.
On request, normally open device are available.

PTC temperature sensor (thermistors) [standard for K-series]
3 sensors connected in series embedded in stator windings. (1 sensor/phase).
Once reached the operating temperature, this device quickly changes the resistance. It is connected to a suitable relay device (not part of our scope of supply).

PT100 thermometric resistors
The resistance value of this device varies according to the windings temperature.
It is suitable for continuous monitoring of the windings temperature. For motors up to frame 355 usually 3xPT100s are used (1 per phase).
For larger motors, 6xPT100s are used. (1set of 3 in the DE winding side a set of 3 in the NDE winding side).

PT100s, are also very common for the temperature monitoring of the motor bearings.
Upon request, we can install PT100 for both bearings of a motor.

All above devices have their separate terminal block in the main terminal box of the motor. Upon request, it is possible to have separate terminal box.

# Energy Efficiency Norms

**Electric Motors and Variable Speed Drives**

Standards and legal requirements for the energy efficiency of low-voltage three-phase motors

# Introduction

The conservative and responsible use of energy to save resources, to reduce the amount of $CO_2$ emissions and to decrease energy costs is the order of the day. The electrical drive system plays a key role in this process. Electrical drives form the link between the electrical energy supply and the majority of mechanical processes, which require a large amount of energy. Machines driven by electrical motors consume 2/3 of all the electrical energy used in industry. If the old systems in German industry, commerce and public facilities, which have been running for decades, were all replaced by modern drive systems, this would result in annual energy savings of 38 billion kilowatt hours. Calculated for all of Europe, this figure would be 135 billion kilowatt hours. By using electronic speed control and energyefficient motors, Europe's $CO_2$ emissions could be reduced by 69 million tonnes.

This brochure describes the new standardised international efficiency classes for standard three-phase motors, the new measuring methods and the requirements stipulated by the European Regulation 640/2009 of the European Commission for energy efficiency in motors and drive systems. This brochure also offers an overview of some of the world-wide existing national legislation and addresses subjects like material composition and life cycle cost.

The brochure is written for users, original equipment manufacturers (OEM), machine manufacturers and motor and drive system manufacturers

# Efficiency Classes of Motors and Measuring Methods

The "efficiency" describes how efficiently an electric motor transforms electrical energy into mechanical energy. Previously in Europe, low voltage three-phase motors have been graded and marketed in three efficiency classes – EFF3, EFF2 and EFF1 – based on a voluntary agreement between motor manufacturers and the European Commission. This classification system is well proven and has now been adapted in many countries around the world. Unfortunately, other countries have also developed their own national systems, which are very different from the European system. That was the reason for the German motor manufacturers in ZVEI, with the support of their European neighbours, to develop an energy efficiency standard for the International Electrotechnical Commission (IEC). The objective was to have a common international standard that replaces all the different national systems. This project was successful and the objective has been met.

The new international standard, IEC 60034-30:2008, defines efficiency classes IE1, IE2 and IE3 for three-phase motors. This ensures a common international basis for the design and classification of motors as well as for national legislative activities. At the same time, the IEC developed improved methods for determining the efficiency of these motors.

The international standards IEC 60034-30:2008 (classification) and IEC 60034-2-1:2007 (measuring methods) have been adopted as European standards without any changes as EN 60034-30:2009 and EN 60034-2-1:2007. For the sake of simplicity, the following sections will refer to the IEC standards only.

Note: In these guidelines, "motors" always refers to low-voltage three-phase motors.

## Previous efficiency classes of motors in Europe

In 1998, as part of the voluntary agreement between the European sector committee of Manufacturers of Electrical Machines and Power Electronics (CEMEP) and the European Commission, three efficiency classes were defined for the power range of 1.1 kW to 90 kW:

- EFF3 = Motors with a low efficiency level
- EFF2 = Motors with an improved efficiency level
- EFF1 = Motors with a high efficiency level

## New international standard for efficiency classes of motors (IE-code)

This voluntary agreement has since expired. However, the efficiency classes remain a registered European trademark. Use of the efficiency classes is based on a contractual licensing agreement between the participants in the voluntary agreement (motor manufacturers) and the license holder (CEMEP / Gimélec). This licensing agreement expired on 15 June 2011.

Standard IEC 60034-30:2008 defines the efficiency classes for low voltage three-phase motors with a power range from 0.75 kW to 375 kW. "IE" stands for "International Efficiency" and is combined with a number:

- IE1 = Standard efficiency
- IE2 = High efficiency
- IE3 = Premium efficiency

The measurement of the efficiency levels is carried out according to the procedure described in IEC 60034-2-1:2007 (see section 1.3).

Important: The new efficiency class (IE-code) of a particular motor must be determined using the new measuring methods (section 1.3).

International standard efficiency level curves (IE-code).
Note: Excat values in section 1.6 efficiency classes

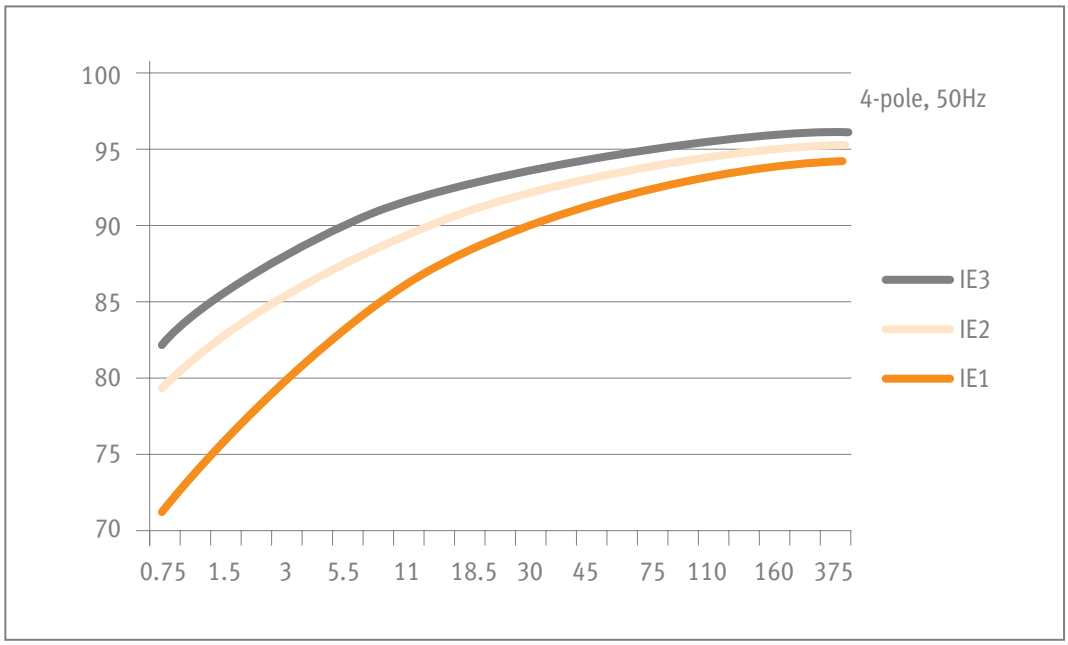


## New IEC measuring methods

The new measuring methods in accordance with IEC 60034-2-1:2007 (standard methods for determining losses and efficiency from tests) apply for all motors described by IEC 60034-1. These methods help to generate more exact data regarding stray load loss. The new standard replaces the previous European standard EN 60034-2:1996, which expired on 1 November 2010. Motors that are marked according to the new efficiency class system (IE-code) are required to be measured using the new measurement methods.

## Comparison of old and new efficiency classes

The new international efficiency class system (IE-code) has an open numbering system. Compared to the old EFF efficiency classes, it is now easier to add future developments. In addition, there is a new class – IE3 – which did not exist in the old European EFF classification system. The scope has also been extended significantly; the new IE-code applies to a larger power range as well as for the 60 Hz classes e.g. in the USA. The main difference between the efficiency classes (EFF and IE) lies in the method used to determine them. In a direct comparison at the same motor, it is expected that the efficiency determined according to the new measuring method will be lower. For example, an 11 kW, 4-pole EFF1 motor with 91.0% efficiency is physically identical with a IE2 motor with 89.8% efficiency.

Efficiency classes

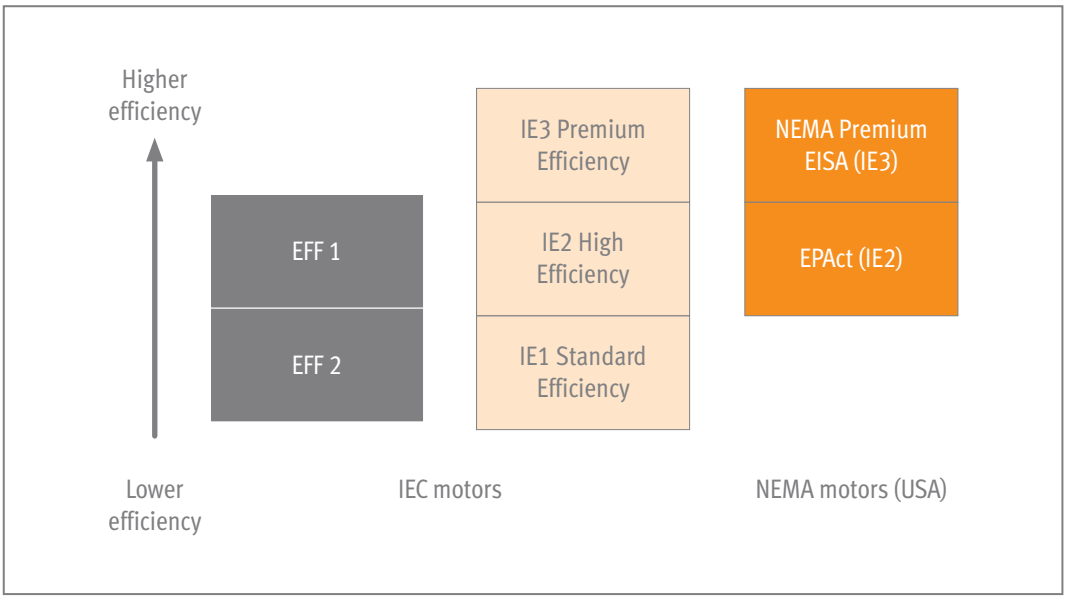


## Scope of new IEC efficiency class system (IE-code)

The efficiency class system specified under IEC 60034-30 is valid for low voltage three-phase cage induction motors with the following specifications:

- Rated voltage up to 1,000 V
- Rated output between 0.75 kW and 375 kW
- Either 2, 4 or 6 poles
- Rated on the basis of continuous duty (S1) or intermittent periodic duty (S3) with cyclic duration factor of 80% or higher;
- Capable of operating direct on-line
- Rated for operating conditions in accordance with IEC 60034-1 (temperature, installation altitude, etc.)

Motors with flanges, feet and/or shafts with mechanical dimensions different from IEC 60072-1 are covered by this standard.

Geared motors and brake motors are covered by this standard, although special shafts and flanges may be used in such motors.

Some motors covered by this standard may be equipped with auxiliary devices. However, as long as these auxiliary devices are not an integral part of the motor construction, the determination of efficiency in all possible combinations is not practical. Determinations for efficiency of such modified standard motors shall be performed on basic motors without auxiliary devices installed.

The following are exceptions to the classification system:

- Motors for short-time duty (S2) or switching operation (S3 < 80% to S10);
- Motors that were solely designed for converter operation (VSD) in accordance with IEC 60034-25 as well as
- Motors that have a highly specialised design customised for one particular application in such a way that it is not possible to measure the motor on its own (for example pump motors with wet rotors).

# Efficiency classes IE1, IE2 and IE3

Efficiency classes for 50 Hz in accordance with IEC 60034-30:2008

| $P_N$ in kW | Number of poles | | | | | | | | |
|---|---|---|---|---|---|---|---|---|---|
| | IE1, 50 Hz | | | IE2, 50 Hz | | | IE3, 50 Hz | | |
| | 2 | 4 | 6 | 2 | 4 | 6 | 2 | 4 | 6 |
| 0.75 | 72.1 | 72.1 | 70.0 | 77.4 | 79.6 | 75.9 | 80.7 | 82.5 | 78.9 |
| 1.1 | 75.0 | 75.0 | 72.9 | 79.6 | 81.4 | 78.1 | 82.7 | 84.1 | 81.0 |
| 1.5 | 77.2 | 77.2 | 75.2 | 81.3 | 82.8 | 79.8 | 84.2 | 85.3 | 82.5 |
| 2.2 | 79.7 | 79.7 | 77.7 | 83.2 | 84.3 | 81.8 | 85.9 | 86.7 | 84.3 |
| 3 | 81.5 | 81.5 | 79.7 | 84.6 | 85.5 | 83.3 | 87.1 | 87.7 | 85.6 |
| 4 | 83.1 | 83.1 | 81.4 | 85.8 | 86.6 | 84.6 | 88.1 | 88.6 | 86.8 |
| 5.5 | 84.7 | 84.7 | 83.1 | 87.0 | 87.7 | 86.0 | 89.2 | 89.6 | 88.0 |
| 7.5 | 86.0 | 86.0 | 84.7 | 88.1 | 88.7 | 87.2 | 90.1 | 90.4 | 89.1 |
| 11 | 87.6 | 87.6 | 86.4 | 89.4 | 89.8 | 88.7 | 91.2 | 91.4 | 90.3 |
| 15 | 88.7 | 88.7 | 87.7 | 90.3 | 90.6 | 89.7 | 91.9 | 92.1 | 91.2 |
| 18.5 | 89.3 | 89.3 | 88.6 | 90.9 | 91.2 | 90.4 | 92.4 | 92.6 | 91.7 |
| 22 | 89.9 | 89.9 | 89.2 | 91.3 | 91.6 | 90.9 | 92.7 | 93.0 | 92.2 |
| 30 | 90.7 | 90.7 | 90.2 | 92.0 | 92.3 | 91.7 | 93.3 | 93.6 | 92.9 |
| 37 | 91.2 | 91.2 | 90.8 | 92.5 | 92.7 | 92.2 | 93.7 | 93.9 | 93.3 |
| 45 | 91.7 | 91.7 | 91.4 | 92.9 | 93.1 | 92.7 | 94.0 | 94.2 | 93.7 |
| 55 | 92.1 | 92.1 | 91.9 | 93.2 | 93.5 | 93.1 | 94.3 | 94.6 | 94.1 |
| 75 | 92.7 | 92.7 | 92.6 | 93.8 | 94.0 | 93.7 | 94.7 | 95.0 | 94.6 |
| 90 | 93.0 | 93.0 | 92.9 | 94.1 | 94.2 | 94.0 | 95.0 | 95.2 | 94.9 |
| 110 | 93.3 | 93.3 | 93.3 | 94.3 | 94.5 | 94.3 | 95.2 | 95.4 | 95.1 |
| 132 | 93.5 | 93.5 | 93.5 | 94.6 | 94.7 | 94.6 | 95.4 | 95.6 | 95.4 |
| 160 | 93.8 | 93.8 | 93.8 | 94.8 | 94.9 | 94.8 | 95.6 | 95.8 | 95.6 |
| 200-375 | 94.0 | 94.0 | 94.0 | 95.0 | 95.1 | 95.0 | 95.8 | 96.0 | 95.8 |

Efficiency classes for 60 Hz in accordance with IEC 60034-30:2008

| $P_N$ in kW | Number of poles | | | | | | | | |
|---|---|---|---|---|---|---|---|---|---|
| | IE1, 60 Hz | | | IE2, 60 Hz | | | IE3, 60 Hz | | |
| | 2 | 4 | 6 | 2 | 4 | 6 | 2 | 4 | 6 |
| 0.75 | 77.0 | 78.0 | 73.0 | 75.5 | 82.5 | 80.0 | 77.0 | 85.5 | 82.5 |
| 1.1 | 78.5 | 79.0 | 75.0 | 82.5 | 84.0 | 85.5 | 84.0 | 86.5 | 87.5 |
| 1.5 | 81.0 | 81.5 | 77.0 | 84.0 | 84.0 | 86.5 | 85.5 | 86.5 | 88.5 |
| 2.2 | 81.5 | 83.0 | 78.5 | 85.5 | 87.5 | 87.5 | 86.5 | 89.5 | 89.5 |
| 3.7 | 84.5 | 85.0 | 83.5 | 87.5 | 87.5 | 87.5 | 88.5 | 89.5 | 89.5 |
| 5.5 | 86.0 | 87.0 | 85.0 | 88.5 | 89.5 | 89.5 | 89.5 | 91.7 | 91.0 |
| 7.5 | 87.5 | 87.5 | 86.0 | 89.5 | 89.5 | 89.5 | 90.2 | 91.7 | 91.0 |
| 11 | 87.5 | 88.5 | 89.0 | 90.2 | 91.0 | 90.2 | 91.0 | 92.4 | 91.7 |
| 15 | 88.5 | 89.5 | 89.5 | 90.2 | 91.0 | 90.2 | 91.0 | 93.0 | 91.7 |
| 18.5 | 89.5 | 90.5 | 90.2 | 91.0 | 92.4 | 91.7 | 91.7 | 93.6 | 93.0 |
| 22 | 89.5 | 91.0 | 91.0 | 91.0 | 92.4 | 91.7 | 91.7 | 93.6 | 93.0 |
| 30 | 90.2 | 91.7 | 91.7 | 91.7 | 93.0 | 93.0 | 92.4 | 94.1 | 94.1 |
| 37 | 91.5 | 92.4 | 91.7 | 92.4 | 93.0 | 93.0 | 93.0 | 94.5 | 94.1 |
| 45 | 91.7 | 93.0 | 91.7 | 93.0 | 93.6 | 93.6 | 93.6 | 95.0 | 94.5 |
| 55 | 92.4 | 93.0 | 92.1 | 93.0 | 94.1 | 93.6 | 93.6 | 95.4 | 94.5 |
| 75 | 93.0 | 93.2 | 93.0 | 93.6 | 94.5 | 94.1 | 94.1 | 95.4 | 95.0 |
| 90 | 93.0 | 93.2 | 93.0 | 94.5 | 94.5 | 94.1 | 95.0 | 95.4 | 95.0 |
| 110 | 93.0 | 93.5 | 94.1 | 94.5 | 95.0 | 95.0 | 95.0 | 95.8 | 95.8 |
| 150 | 94.1 | 94.5 | 94.1 | 95.0 | 95.0 | 95.0 | 95.4 | 96.2 | 95.8 |
| 185-375 | 94.1 | 94.5 | 94.1 | 95.4 | 95.4 | 95.0 | 95.8 | 96.2 | 95.8 |

## EuP Directive and EU Motor Regulation

The European Union set the environmental goal of reducing greenhouse gas emissions by 20% by the year 2020. Early measures taken to reach this goal were the ban on incandescent light bulbs and the specifications for the reduction of standby losses. The legal basis for these measures is the EuP Directive (2005/32/EC), adopted on 6 July 2005, which defines the requirements for the ecodesign of energy-using products. The EuP Directive forms the basis for numerous product-related directives. On 21 October 2009, a new version of this directive went into effect (2009/125/EC). This new directive expanded the requirements to include the ecodesign of energy-related products (ErP – Energy-Related Products). Germany's national version of this directive is the Energy-Using Products Act (Energiebetriebene- Produkte-Gesetz – "EBPG"), which is often referred to as the "ecodesign directive".

## Commission Regulation (EC) 640 / 2009

Commission Regulation 640/2009, adopted on 22 July 2009, specifies the requirements regarding the ecodesign of electric motors and the use of electronic speed control (VSD). These requirements also apply when these devices are integrated in other products (e.g. machines).

## Scope and exceptions

The scope of the EuP Motor Regulation is more limited than that of IEC 60034-30. Both include low voltage three-phase cage-induction motors for 50 Hz or 50/60 Hz with the following properties:

- Rated voltage up to 1,000 V
- Rated output between 0.75 kW and 375 kW
- Either 2, 4 or 6 poles
- Rated for continuous duty

The differences between the EuP Motor regulation and IEC standard lie in the exceptions and in the additional operating mode, S3 (cyclic duration factor ≥ 80%).

**The following are exempted from the EuP Motor Regulation:**

a) Motors designed to operate wholly immersed in a liquid
b) Motors completely integrated into a product for which the energy efficiency cannot be measured independently of the product
c) Motors that are specially designed for operation under the following conditions:
   i) At altitudes exceeding 1,000 meters above sea level
   ii) Where ambient air temperatures exceed 40°C
   iii) At maximum operating temperatures above 400°C
   iv) Where ambient air temperatures are less than -15°C for any motor or less than 0°C for a motor with air cooling;*
   v) Where the water coolant temperature at the inlet to a product is less than 5°C or exceeding 25°C
   vi) In potentially explosive atmospheres as defined in Directive 94/9/EC of the European Parliament and the European Council (3)
d) Brake motors

## Requirements and schedule

**The individual requirements will come into effect in accordance with the following schedule:**

- From 16 June 2011, motors placed for the first-time on the market shall have a minimum efficiency class of IE2.
- From 1 January 2015: motors with a rated output between 7.5 - 375 kW shall have a minimum efficiency class of IE3, or minimum IE2 if they are operated/equipped with electronic speed control (VSD).
- From 1 January 2017: motors with a rated output between 0.75 - 375 kW shall have a minimum efficiency class of IE3, or minimum IE2 if they are operated/equipped with electronic speed control (VSD).

Electronic speed control is carried out using a frequency converter (VSD) that adjusts the speed of the motor – and therefore the power produced – based on the energy needed. See section 3 for the detailed implementation strategy for this schedule.

* **Note:** The European Commission has confirmed that the word "air cooling" is a typing mistake and should be corrected into "water cooling". The current text of the directive is valid until further notice.

## Scope of standard and directive

Scope of standard and directive

Standards function as recommendations that can be observed voluntarily by anyone. Standards are not legally binding, however they may become so as a result of legal regulations imposed by lawmakers or through contracts in which compliance is mandatory. They often serve to clarify undefined legal terms – for example the term "state of the art" – thereby gaining legal significance.

The standard IEC 60034-30:2008 defines efficiency classes for motors, thereby creating a common international guideline. However, the standard itself does not specify whether motors are required to comply with a particular minimum efficiency class. This is specified by the applicable national laws and directives. In Europe, Commission Regulation 640/2009 specifies the minimum requirements.

Please note that the scope of the EU Motor Directive (section 2.2) is more limited than that of IEC 60034-30.

Comparison of scope of IEC/EU Motor Regulation

| | Which motor falls under which scope? | Standard IEC 60034-30: 2008 Class markings for IE1, IE2, IE3 | EuP directive/ Regulation 640/2009 Legal minimum requirement |
|---|---|---|---|
| 1. | Standard three-phase induction motor 0.75 – 375 kW 2, 4, 6 pole, continuous duty, 50 Hz or 50/60 Hz<br><br>(Note: Also applies if the motor is integrated in a machine.) | Yes<br><br>Note: Also S3 operating mode (cyclic duration factor ≥80%) | Yes |
| 2. | Standard three-phase induction motor with auxiliary devices (shaft seals, back-stops, speed sensors etc.) 0.75 – 375 kW, 2, 4, 6 pole, continuous duty, 50 Hz or 50/60 Hz<br><br>(Note: Measurement of efficiency without auxiliary devices) | Yes<br><br>Note: Also S3 operating mode (cyclic duration factor ≥80%) | Yes |
| 3. | Geared motors | Yes | Yes |
| 4. | Explosion-protected motors | Yes | No |
| 5. | Brake motor:<br>A motor equipped with an electro-mechanical brake unit operating directly on the motor shaft without couplings. | Yes | No |
| 6. | Motors completely integrated into a machine (for example pump, ventilators, gear or compressor) of which the efficiency cannot be tested independently from the machine. | No | No |
| 7. | Other types of motors (e.g. permanent magnet motors, pole-changing motors, motors for switching operation e.g. servomotors) | No | No |

## Efficiency marking on motor

Each motor must be equipped with a rating plate. The data on the rating plate is specified in standard IEC 60034-1. This includes the efficiency level of the motor n at 100% rated load only. The Motor Regulation also requires the indication of the efficiency level at 75% and 50% rated load.

ZVEI is of the opinion that it is sufficient to indicate the efficiency level at 100% rated load on the rating plate only, as described in IEC 60034-1. It is considered to be sufficient to list the efficiency level at 75% and 50% rated load in the documentation of the product only. ZVEI has requested clarification from the European Commission. Note that the current text of the regulation remains valid until further notice.

## Implementing the Requirements of the EU Motor Regulation

The manufacturer or an authorised representative must ensure that the motors conform with the requirements of Commission Regulation 640/2009. Just as for other European product requirements ("CE Directives") the date of the "first-time placing on the market," and in certain cases, the "putting into service" of products determine the effectiveness of these requirements.

The following sub-clauses 3.1 to 3.6 are ZVEI positions that have been prepared based on legal requirements and European Commission publications regarding CE Directives.

## Date of first-time placing on the market

Motors that were placed on the market before the deadline of 16 June 2011 may continue to be sold after the deadline. They may also be put into service and operated in accordance with the regulations in effect before that deadline.

**Practical example**
Manufacturer A, identified by name on or near the product, may place motors with an efficiency level lower than efficiency class IE2 in accordance with the scope of Directive 640/2009 on the market until 15 June 2011. These motors are considered to have been placed on the market legally if they have been transferred to another legal person (e.g. distributors, LTD sales company of the manufacturer) before this date. They may then be resold, put into service and used after the deadline of 16 June 2011.

## Motors integrated into other products

Motors that were placed for the first-time on the market before the deadline of 16 June 2011 may also be integrated into other products after the deadline.

**Practical example**
A machine (e.g. compressor, pump) contains an integrated motor of efficiency class IE1 in accordance with Directive 640/2009. The manufacturer of this motor is identified by name on or near the integrated motor. The motor was first-time placed on the market before 16 June 2011 in accordance with the law. The machine with the integrated motor of efficiency class IE1 may be placed on the market and used even after the deadline of 16 June 2011.

By including motors that are integrated into other products, and which therefore are not first-time placed on the market as motors, the regulation prevents circumvention of the law by the purchase of imported products (e.g. machines).

**Practical example**
A pump, in this case a finished product that contains a motor in accordance with the scope of Directive 640/2009, is imported into the European community. The integrated motor must comply with the requirements of Directive 640/2009. In this case, this is the first time the motor is being placed on the European market as an integrated motor.

## Spare motors

The regulation does not allow any exception for spare motors. Please note the requirements listed in sub-clause 3.1 “Date of first-time placing on the market”.

**Practical example**
A motor of efficiency class IE1 may not even be placed on the market (for the first time) as a spare part after the deadline of 16 June 2011 in accordance with the scope of Directive 640/2009.

## Consignment stock

There are different contracts for consignment stock. In practice, consignment stock refers to products held in the stock of a supplier or a service provider that belongs to the company of the customer (buyer).
The products remains the property of the supplier until the customer removes it from the stock. The delivery date is considered to be the date upon which the product is removed from the stock. The invoice will be based on this date. However, in the act of placing the energy-using product in consignment stock (subject to or free of charge), the supplier is performing a first-time placing on the market of the product in question.

**Practical example**
Motors covered by the scope of Directive 640/2009 with an efficiency level lower than efficiency class IE2 that have been placed in consignment stock before the deadline of 16 June 2011, allowing the customer unlimited power of disposal, may be removed from the stock and used by the customer after the appointed date.

## Putting motors with variable speed drive into service

Motors of efficiency class IE2 may also be placed on the market after the deadline of 1 January 2015, provided that they comply with certain conditions. These conditions stipulate that the manufacturer or an authorised representative must display a notice on the motor itself and in the product information that indicates that the motor in question may only be operated using electronic speed control, in accordance with the EuP Motor regulation. For motors of class IE2 that have been placed on the market before 1 January 2015 (2017), see sub-clause 3.1 “Date of first-time placing on the market”.

## Exports outside the European economic area

The following are not cases of placing products on the market in the sense of the ErP Directive 2009/125/EG* and its implementing regulations:

- if the product is exported from a manufacturer in a member state to a third country outside the European economic area (EEA).
- if a manufacturer’s product is transferred to an exporter (traders or machine manufacturers) that then exports it outside the EEA independently or as an integrated component

* Replacement for the preceding EuP Directive 2005/32/EC

**Practical example**

- A manufacturer based in the European economic area (EEA) can produce and distribute motors of class IE1 within the scope of regulation 640/2009 even after 16 June 2011 insofar as these motors are exclusively intended for export outside the EEA. These motors cannot be labelled with the CE marking.
- A manufacturer in the European economic area (EEA) of machines integrates electric motors into its machines and exports these exclusively to countries outside the EEA. The integrated motors do not need to comply with regulation 640/2009 and other CE Directives and must not be labelled with the CE mark.

Note: It it to be taken care that these motors are sold for use outside of the European economic area only.

## Market surveillance

Market surveillance is the responsibility of the EU member states. The member states shall designate the authorities responsible for market surveillance and specify the necessary tasks, powers and organisational arrangements. In Germany, market surveillance is the responsibility of the federal state authorities. The German Federal Institute for Materials Research and Testing (Bundesanstalt für Materialforschung und -prüfung – "BAM") is responsible for coordinating the exchange of information between the federal state authorities in charge of market surveillance and the other EU member states. BAM supports the federal state authorities in the development of their surveillance concept and in the inspection of the effectiveness of their market surveillance methods.

# International Regulations for Energy-Efficient Motors

World-wide there are various national regulations for the use of energy-efficient motors. Some of these are currently in effect and some are still in progress. Table 4 provides an overview of the regulations in important industrial countries. We cannot guarantee that this table is complete, as this topic is currently being developed rapidly.

Overview/selection of national energy efficiency regulations for motors

| Country | Information: |
|---|---|
| Australia | http://www.energyrating.gov.au/man1.html |
| Brazil | http://www.inmetro.gov.br |
| Chile | http://www.sec.cl<br>http://www.clasponline.org/clasp.online.worldwide.php?teststandard=1086 |
| China | http://www.cnis.gov.cn<br>http://www.energylabel.gov.cn |
| Canada | http://www.oee.nrcan.gc.ca/regulations/home_page.cfm |
| Korea | http://www.mke.go.kr/<br>http://www.co2.kemco.or.kr/ |
| Mexico | http://www.sener.gob.mx/webSener/portal/ndex.jsp?id=19 |
| Switzerland | http://www.bfe.admin.ch/themen/00507/04257/index.html?lang=de |
| South Africa | http://www.sabs.co.za<br>http://www.sabs.co.za/index.php?page=electrorotating |
| U.S.A. | http://www.nema.org/gov/energy/effi ciency/premium/ |

## Material Composition of Motors

The ecodesign directive also affects the material composition of the relevant products. A study sponsored by the European Commission determined that it is the use phase rather than the manufacturing phase that determines the environmental characteristics of a particular motor. The European sector committee of Manufacturers of Electrical Machines and Power Electronics (CEMEP) determined average values for the material composition. Tables 5 through 7 show the most important materials used to manufacture motors in power ranges 1.1 kW, 11 kW and 110 kW in efficiency classes IE1 and IE2.

Typical material composition of a 1.1 kW motor in class IE1 or IE2

| | 1.1 kW motor, IE1 | | 1.1 kW motor, IE2 | |
|---|---|---|---|---|
| | Average kg/per kW | Tolerance | Average kg/per kW | Tolerance |
| Electrical steel | 5.40 | - | 8.00 | - |
| Other steel 1.50 | - | 1.60 | - | |
| Cast iron* | 2.50 | 0.0 – 5.0 | 2.50 | 0.0 – 5.0 |
| Aluminium* | 1.70 | 0.5 – 2.5 | 2.00 | 0.5 – 4.0 |
| Copper | 1.24 | - | 1.90 | - |
| Insulation material | 0.05 | - | 0.05 | - |
| Packaging material | 1.00 | - | 1.00 | - |
| Impregnating resin | 0.30 | - | 0.30 | - |
| Paint/Colour | 0.10 | - | 0.10 | - |

Typical material composition of a 11 kW motor in class IE1 or IE2

| | 11 kW motor, IE1 | | 11 kW motor, IE2 | |
|---|---|---|---|---|
| | Average kg/per kW | Tolerance | Average kg/per kW | Tolerance |
| Electrical steel | 3.60 | – | 4.80 | – |
| Other steel | 0.95 | - | 1.00 | – |
| Cast iron* | 1.30 | 0.0 – 2.0 | 1.30 | 0.0 – 2.0 |
| Aluminium* | 0.90 | 0.2 – 1.5 | 1.00 | 0.25 – 1.8 |
| Copper | 0.64 | – | 0.90 | – |
| Insulation material | 0.02 | – | 0.02 | – |
| Packaging material | 0.90 | – | 0.90 | – |
| Impregnating resin | 0.10 | – | 0.10 | – |
| Paint/Colour | 0.05 | – | 0.05 | – |

Typical material composition of a 110 kW motor in class IE1 or IE2

| | 110 kW motor, IE1 | | 110 kW motor, IE2 | |
|---|---|---|---|---|
| | Average kg/per kW | Tolerance | Average kg/per kW | Tolerance |
| Electrical steel | 3.10 | - | 3.60 | - |
| Other steel | 0.67 | - | 0.70 | - |
| Cast iron* | 3.00 | - | 3.00 | - |
| Aluminium* | 0.18 | - | 0.20 | - |
| Copper | 0.54 | - | 0.60 | - |
| Insulation material | 0.01 | - | 0.01 | - |
| Packaging material | 0.50 | - | 0.50 | - |
| Impregnating resin | 0.05 | - | 0.05 | - |
| Paint/Colour | 0.01 | - | 0.01 | - |

*The tolerances for cast iron and aluminium are given because both materials are suitable for use in certain parts of the motors (e.g. the housing).

The amount of material used increases with higher efficiency classes. Motors of efficiency class IE3 require a much greater use of materials than motors of efficiency class IE2. The purchasing price also increases for higher efficiency classes. In terms of the cost of the entire life cycle of the unit, in spite of the higher purchasing price, these motors pay for themselves within a relatively short time (see section 6).

## Life Cycle Cost Analysis

The increased purchasing price for energy-efficient drive systems is often quickly recovered due to the total savings in energy costs. For this reason, it is important to conduct a life cycle cost analysis (LCC analysis) before making investment decisions in order to evaluate the total economic benefits of a particular drive system.
A very simple LCC analysis can be carried out for the motor as a component. The energy costs during the use phase are significant, leading to relatively short pay-back periods.

LCC analysis, 11 kW motors, life cycle 15 years, IE2
(Source: Preparatory Studies, EUP- Lot 11 Motors

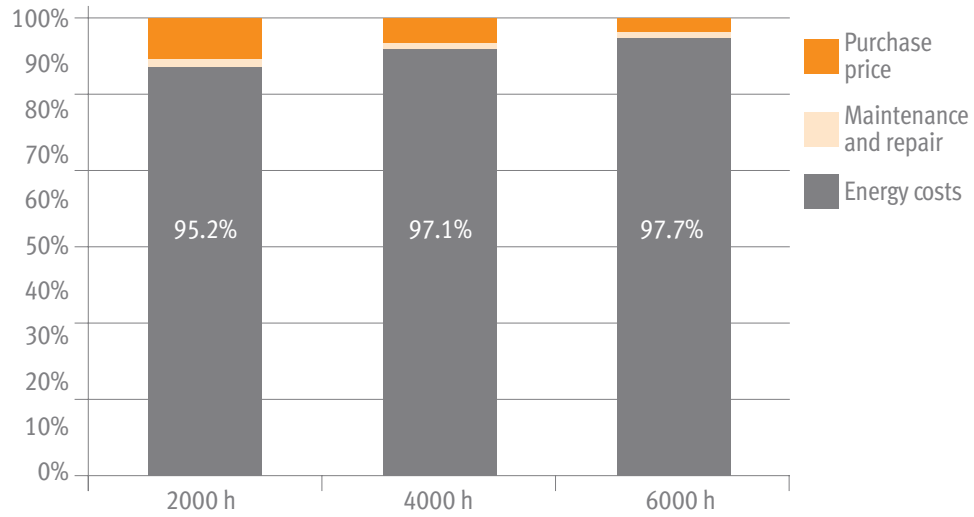


| Operating hours per year | 2000 h | 4000 h | 6000 h |
|---|---|---|---|
| Purchase price | 3.8% | 1.9% | 1.3% |
| Maintenance and repair | 1.0% | 1.0% | 1.0% |
| Energy costs | 95.2% | 97.1% | 97.7% |

## References


- IEC 60034-1:2010, Rotating electrical machines - Part 1: Rating and performance
- IEC 60034-2-1:2007, Rotating electrical machines - Part 2-1: Standard methods for determining losses and efficiency from tests
- IEC 60034-30:2008, Rotating electrical machines - Part 30: Efficiency classes of single-speed, threephase, cage-induction motors (IE-code)
- Guide to the implementation of directives based on the new approach and the global approach, ISBN 92-828-7449-0
- Preparatory Studies, EUP- Lot 11 Motors, Anvbal T. de Almeida, Fernando J. T. E. Ferreira, Joyo Fong, Paula Fonseca, ISR- University of Coimbra (18 February 2008)
- Directive 2005/32/EC establishing a framework for the setting of ecodesign requirements for energyusing products
- Directive 2009/125/EC establishing a framework for the setting of ecodesign requirements for energy-related products
- Commission Regulation (EC) 640/2009 of 22 July 2009 implementing Directive 2005/32/EC of the European Parliament and of the Council with regard to ecodesign requirements for electric motors

# K series

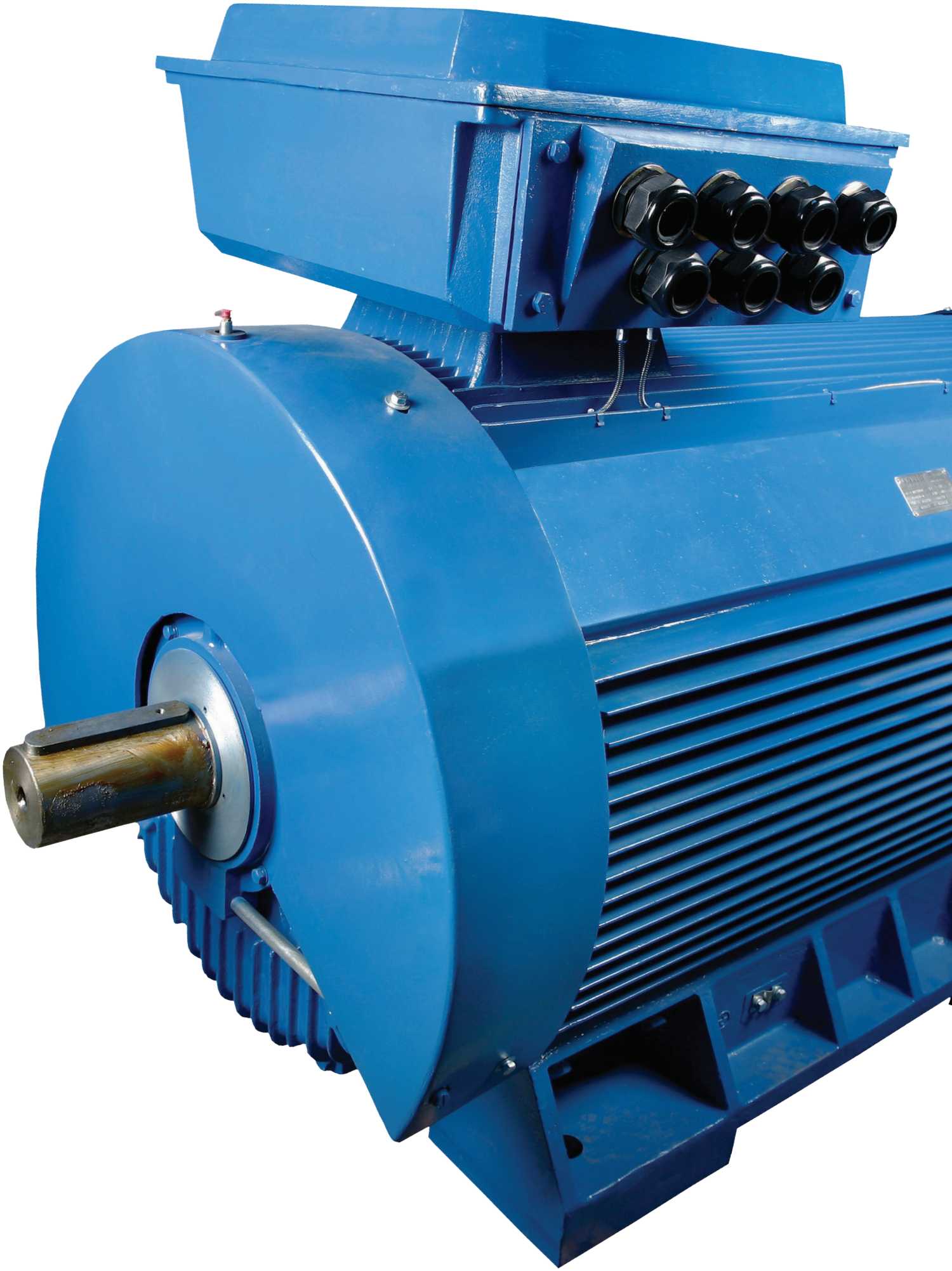

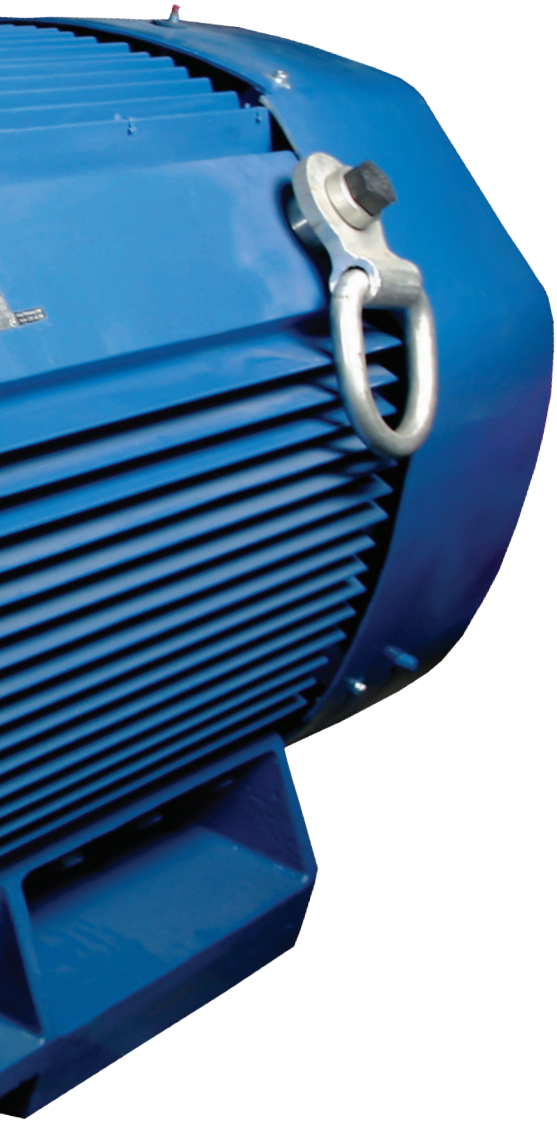

# K-series

## Technical description
## IEC 80-560

Up to 3kW (4HP): 380-420 / 220-240 V Y/Δ 50Hz
From 4kW (5.5HP): 660-725 / 380-420 V Y/Δ 50Hz

## Applications

- Pumps
- Blowers
- Conveyor
- Textiles
- Compressors
- Marine duty
- Gears

## Standard features

- Heavy duty design cast iron housing motor (feet integral with the casing)
- IP55 protection degree
- Insulation class F, temperature rise 80°C
- Standard PTC protection in the winding (1 per phase series connected)
- Standard oil seals in both DE and NDE sides
- Top mounted terminal box (with the possibility of rotation by 180°)
- SKF or NSK bearings
- Regreasable bearings from frame size 160 and above
- RAL 5010, blue color

## Optional features

- Special voltages and frequency
- Class H insulation
- Brake up to frame 280
- Forced cooling for constant torque operation through frequency inverter
- IP56 / IP65 protection
- Right or Left-hand side terminal box
- PT100 in the winding and bearings
- Frame reduced motors (non-IEC)
- Drip cover (canopy) for shaft down applications
- Anticondensation heaters
- Encoder
- Insulated bearing
- Roller bearings on drive end
- Double shaft
- Epoxy raisin encapsulated terminal box
- Epoxy raisin encapsulated winding
- Silicon encapsulated terminal box
- Cable execution (with terminal box or directly connected)
- Additional terminal box

# K-series

Three-phase motors with squirrel cage, protection degree IP55

**2 POLES-3.000 Rpm**
380-420/220-240 V Y/Δ 50 Hz
660-725/380-420 V Y/Δ 50 Hz
Insulation class F

| TYPE | Power | | Speed | Efficiency | Power Factor | Rated current (400V) | Nominal Torque | Moment of inertia GD²/4 | Starting current ratio | Starting Torque ratio | Break-down Torque | Net Weight |
|---|---|---|---|---|---|---|---|---|---|---|---|---|
| | KW | HP | RPM | % | συνφ | A | Nm | kgm² | Ip/In | Mp/Mn | Mm/Mn | kg |
| K80-2 | 0,75 | 1 | 2830 | 75,8 | 0,83 | 1,7 | 2,5 | 0,0008 | 7,0 | 3,10 | 2,90 | 13 |
| K80-2 | 1,1 | 1,5 | 2830 | 76,1 | 0,84 | 2,5 | 3,7 | 0,0009 | 6,7 | 2,90 | 3,00 | 15 |
| K90S-2 | 1,5 | 2 | 2840 | 79,3 | 0,84 | 3,3 | 5,0 | 0,0012 | 6,8 | 3,00 | 3,00 | 20 |
| K90L-2 | 2,2 | 3 | 2840 | 81,5 | 0,85 | 4,6 | 7,4 | 0,0015 | 6,9 | 3,40 | 2,90 | 23 |
| K100L-2 | 3 | 4 | 2860 | 82,7 | 0,87 | 6,0 | 10 | 0,0030 | 7,2 | 2,90 | 2,90 | 30 |
| K112M-2 | 4 | 5,5 | 2880 | 85,3 | 0,88 | 7,7 | 13 | 0,0050 | 6,9 | 2,38 | 3,07 | 40 |
| K132S-2 | 5,5 | 7,5 | 2900 | 89,4 | 0,88 | 10,1 | 18 | 0,0100 | 7,0 | 2,30 | 2,85 | 54 |
| K132S-2 | 7,5 | 10 | 2900 | 88,6 | 0,88 | 13,9 | 25 | 0,0120 | 6,8 | 2,27 | 3,08 | 60 |
| K160M-2 | 11 | 15 | 2930 | 89,4 | 0,88 | 20,2 | 36 | 0,0300 | 7,3 | 2,40 | 3,09 | 99 |
| K160M-2 | 15 | 20 | 2930 | 91,2 | 0,89 | 27 | 49 | 0,0450 | 7,1 | 2,27 | 3,07 | 110 |
| K160L-2 | 18,5 | 25 | 2930 | 92,7 | 0,89 | 32 | 60 | 0,0550 | 6,8 | 2,29 | 2,70 | 127 |
| K180M-2 | 22 | 30 | 2940 | 91,0 | 0,9 | 39 | 71 | 0,0760 | 7,6 | 3,10 | 3,14 | 167 |
| K200L-2 | 30 | 40 | 2940 | 90,7 | 0,9 | 53 | 97 | 0,1240 | 7,2 | 2,86 | 3,09 | 220 |
| K200L-2 | 37 | 50 | 2950 | 91,6 | 0,89 | 66 | 120 | 0,1390 | 7,2 | 2,80 | 2,92 | 242 |
| K225M-2 | 45 | 60 | 2970 | 93,1 | 0,9 | 78 | 145 | 0,2330 | 7,1 | 2,98 | 3,04 | 281 |
| K250M-2 | 55 | 75 | 2970 | 92,2 | 0,9 | 96 | 177 | 0,3120 | 7,3 | 2,39 | 3,01 | 373 |
| K280S-2 | 75 | 100 | 2970 | 95,0 | 0,9 | 127 | 241 | 0,5970 | 6,2 | 2,20 | 2,70 | 477 |
| K280M-2 | 90 | 125 | 2970 | 94,2 | 0,91 | 152 | 289 | 0,6750 | 6,2 | 2,10 | 2,60 | 516 |
| K315S-2 | 110 | 150 | 2980 | 95,2 | 0,91 | 184 | 353 | 1,1400 | 7,1 | 2,32 | 2,81 | 792 |
| K315M-2 | 132 | 180 | 2980 | 95,8 | 0,91 | 219 | 423 | 1,1900 | 6,6 | 2,32 | 2,68 | 828 |
| K315L-2 | 160 | 220 | 2980 | 96,2 | 0,92 | 261 | 513 | 1,7600 | 6,9 | 2,17 | 2,87 | 932 |
| K315L-2 | 200 | 270 | 2980 | 95,3 | 0,92 | 330 | 641 | 2,0200 | 6,5 | 2,29 | 2,91 | 1.044 |
| K355M-2 | 250 | 340 | 2980 | 95,9 | 0,92 | 409 | 801 | 3,5600 | 6,6 | 2,20 | 2,88 | 1.638 |
| K355L-2 | 315 | 430 | 2980 | 97,0 | 0,92 | 510 | 1.009 | 3,8490 | 7,8 | 1,70 | 4,10 | 1.798 |
| K355L-2 | 355 | 480 | 2975 | 96,0 | 0,89 | 600 | 1.140 | 4,12 | 5,4 | 1,61 | 2,70 | 1.834 |
| K400-2 | 400 | 540 | 2975 | 96,0 | 0,91 | 660 | 1.284 | 5,80 | 7,7 | 1,71 | 2,90 | 3.000 |
| K400-2 | 450 | 600 | 2975 | 96,3 | 0,91 | 741 | 1.445 | 5,90 | 6,8 | 1,60 | 2,00 | 3.100 |
| K400-2 | 500 | 680 | 2975 | 96,3 | 0,92 | 815 | 1.605 | 6,40 | 6,8 | 1,60 | 2,00 | 3.150 |
| K400-2 | 560 | 760 | 2980 | 96,4 | 0,92 | 911 | 1.795 | 8,60 | 7,0 | 1,50 | 2,00 | 3.200 |
| K400-2 | 630 | 850 | 2980 | 96,4 | 0,92 | 1025 | 2.019 | 9,60 | 7,0 | 1,50 | 2,00 | 3.500 |
| K400-2 | 710 | 965 | 2980 | 96,5 | 0,92 | 1159 | 2.275 | 11,00 | 7,0 | 1,50 | 2,00 | 3.660 |
| K450-2 | 800 | 1090 | 2985 | 96,5 | 0,92 | 1306 | 2.559 | 19,00 | 7,0 | 1,00 | 2,00 | 4.400 |
| K450-2 | 900 | 1225 | 2985 | 96,7 | 0,92 | 1466 | 2.879 | 21,00 | 7,0 | 1,00 | 2,00 | 4.650 |
| K450-2 | 1000 | 1360 | 2985 | 96,7 | 0,92 | 1629 | 3.199 | 23,00 | 7,0 | 1,00 | 2,00 | 4.950 |

# K-series

Three-phase motors with squirrel cage, protection degree IP55

**4 POLES-1.500 Rpm**
380-420/220-240 V Y/Δ 50 Hz
660-725/380-420 V Y/Δ 50 Hz
Insulation class F

| TYPE | Power | | Speed | Efficiency | Power Factor | Rated current (400V) | Nominal Torque | Moment of inertia GD²/4 | Starting current ratio | Starting Torque ratio | Break-down Torque | Net Weight |
|---|---|---|---|---|---|---|---|---|---|---|---|---|
| | KW | HP | Rpm | % | συνφ | Amp | Nm | Kgm² | Ip/In | Mp/Mn | Mm/Mn | Kg |
| K80-4 | 0,55 | 0,75 | 1390 | 69,2 | 0,75 | 1,5 | 3,8 | 0,0018 | 5,1 | 2,40 | 2,80 | 13 |
| K80-4 | 0,75 | 1 | 1390 | 74,5 | 0,76 | 1,9 | 5,2 | 0,0021 | 4,9 | 3,00 | 2,70 | 15 |
| K90S-4 | 1,1 | 1,5 | 1390 | 74,4 | 0,77 | 2,8 | 7,6 | 0,0021 | 5,4 | 2,50 | 2,50 | 20 |
| K90L-4 | 1,5 | 2 | 1390 | 77,5 | 0,79 | 3,5 | 10,3 | 0,0027 | 5,9 | 3,20 | 2,60 | 24 |
| K100L-4 | 2,2 | 3 | 1410 | 80,5 | 0,81 | 4,9 | 15 | 0,0054 | 6,6 | 2,70 | 2,80 | 29 |
| K100L-4 | 3 | 4 | 1410 | 81,3 | 0,82 | 6,5 | 20 | 0,0067 | 6,5 | 2,70 | 2,90 | 32 |
| K112M-4 | 4 | 5,5 | 1435 | 80,1 | 0,82 | 8,8 | 27 | 0,0086 | 6,8 | 2,40 | 3,20 | 42 |
| K132S-4 | 5,5 | 7,5 | 1440 | 86,3 | 0,83 | 11,1 | 36 | 0,021 | 7,4 | 2,20 | 3,50 | 57 |
| K132M-4 | 7,5 | 10 | 1440 | 93,6 | 0,81 | 14,3 | 50 | 0,029 | 7,7 | 2,60 | 3,50 | 69 |
| K160M-4 | 11 | 15 | 1460 | 89,3 | 0,84 | 21,2 | 72 | 0,075 | 7,3 | 2,37 | 2,90 | 107 |
| K160L-4 | 15 | 20 | 1485 | 91,5 | 0,84 | 28,2 | 96 | 0,092 | 8 | 2,55 | 3,50 | 129 |
| K180M-4 | 18,5 | 25 | 1465 | 91,2 | 0,86 | 34 | 121 | 0,139 | 6,9 | 2,13 | 3,09 | 162 |
| K180L-4 | 22 | 30 | 1470 | 92,0 | 0,86 | 40 | 143 | 0,158 | 7,6 | 2,59 | 3,27 | 172 |
| K200L-4 | 30 | 40 | 1480 | 92,0 | 0,86 | 55 | 194 | 0,262 | 6,3 | 2,01 | 2,61 | 224 |
| K225S-4 | 37 | 50 | 1480 | 93,0 | 0,87 | 66 | 239 | 0,406 | 7 | 2,2 | 2,97 | 277 |
| K225M-4 | 45 | 60 | 1480 | 94,3 | 0,87 | 79 | 290 | 0,469 | 6,7 | 1,84 | 2,80 | 302 |
| K250M-4 | 55 | 75 | 1480 | 94,1 | 0,87 | 97 | 355 | 0,660 | 6 | 2,3 | 2,54 | 383 |
| K280S-4 | 75 | 100 | 1480 | 94,9 | 0,87 | 131 | 484 | 1,120 | 6,5 | 2,4 | 2,80 | 527 |
| K280M-4 | 90 | 125 | 1480 | 97,1 | 0,87 | 154 | 581 | 1,460 | 7,1 | 2,5 | 2,90 | 548 |
| K315S-4 | 110 | 150 | 1490 | 96,5 | 0,88 | 187 | 705 | 3,110 | 6,5 | 2,21 | 2,91 | 850 |
| K315M-4 | 132 | 180 | 1490 | 95,4 | 0,88 | 227 | 846 | 3,290 | 5,7 | 1,88 | 2,56 | 918 |
| K315L-4 | 160 | 220 | 1490 | 95,4 | 0,89 | 272 | 1.026 | 3,790 | 6,9 | 2,28 | 2,72 | 1.018 |
| K315L-4 | 200 | 270 | 1490 | 96,4 | 0,89 | 337 | 1.282 | 4,490 | 5,7 | 2,1 | 2,70 | 1.122 |
| K355M-4 | 250 | 340 | 1490 | 96,0 | 0,9 | 418 | 1.602 | 5,670 | 7,2 | 2,29 | 2,89 | 1.650 |
| K355L-4 | 315 | 430 | 1490 | 97,8 | 0,9 | 517 | 2.019 | 8,702 | 5,3 | 2,11 | 2,49 | 1.804 |
| K355L-4 | 355 | 480 | 1490 | 96,0 | 0,89 | 600 | 2.275 | 11,2 | 7,8 | 2,3 | 3,4 | 2.083 |
| K400-4 | 400 | 540 | 1490 | 96,0 | 0,88 | 682 | 2.564 | 14,9 | 6,2 | 1,33 | 3,58 | 3.000 |
| K400-4 | 450 | 610 | 1490 | 96,0 | 0,90 | 753 | 2.884 | 15,1 | 6,7 | 1,25 | 3,35 | 3.050 |
| K400L-4 | 500 | 680 | 1490 | 96,2 | 0,89 | 846 | 3.205 | 18,4 | 6,3 | 1,22 | 3,16 | 3.300 |
| K400-4 | 560 | 760 | 1490 | 96,0 | 0,89 | 946 | 3.589 | 19,5 | 7,4 | 1,74 | 3,92 | 3.400 |
| K400-4 | 630 | 850 | 1485 | 96,2 | 0,9 | 1052 | 4.052 | 21,1 | 5,8 | 1,32 | 2,8 | 3.500 |
| K400-4 | 710 | 965 | 1490 | 96,0 | 0,9 | 1181 | 4.551 | 21,8 | 7,0 | 1,47 | 3,55 | 3.600 |
| K450-4 | 800 | 1090 | 1490 | 96,6 | 0,89 | 1349 | 5.128 | 33,8 | 7,0 | 1,2 | 2 | 4.700 |
| K450-4 | 900 | 1225 | 1490 | 96,8 | 0,89 | 1514 | 5.768 | 36,9 | 7,0 | 1,2 | 2 | 4.900 |
| K450-4 | 1000 | 1360 | 1490 | 96,8 | 0,89 | 1682 | 6.409 | 41,9 | 7,0 | 1,2 | 2 | 5.150 |
| K500-4 | 1120 | 1525 | 1490 | 97,0 | 0,9 | 1859 | 7.179 | 53,0 | 7,0 | 0,9 | 2 | 5.680 |
| K500-4 | 1250 | 1700 | 1490 | 97,0 | 0,9 | 2075 | 8.012 | 59,0 | 7,0 | 0,9 | 2 | 5.820 |
| K500-4 | 1400 | 1900 | 1490 | 97,0 | 0,9 | 2324 | 8.973 | 66,0 | 7,0 | 0,9 | 2 | 6.140 |

# K-series

Three-phase motors with squirrel cage, protection degree IP55

**6 POLES-1.000 Rpm**
380-420/220-240 V Y/Δ 50 Hz
660-725/380-420 V Y/Δ 50 Hz
Insulation class F

| TYPE | Power | | Speed | Efficiency | Power Factor | Rated current (400V) | Nominal Torque | Moment of inertia GD²/4 | Starting current Ratio | Starting Torque Ratio | Break down Torque | Net Weight |
|---|---|---|---|---|---|---|---|---|---|---|---|---|
| | KW | HP | Rpm | % | συνφ | Amp | Nm | Kgm² | Ip/In | Mp/Mn | Mm/Mn | Kg |
| K80-6 | 0,37 | 0,5 | 890 | 61,4 | 0,70 | 1,2 | 4,0 | 0,0016 | 3,5 | 2,00 | 2,80 | 15 |
| K80-6 | 0,55 | 0,75 | 890 | 64,1 | 0,72 | 1,7 | 5,9 | 0,0021 | 3,0 | 2,11 | 2,29 | 16 |
| K90S-6 | 0,75 | 1 | 910 | 68,4 | 0,72 | 2,2 | 7,9 | 0,0029 | 4,6 | 2,90 | 2,70 | 21 |
| K90L-6 | 1,1 | 1,5 | 910 | 71,1 | 0,73 | 3,1 | 11,5 | 0,0035 | 4,6 | 2,60 | 2,60 | 23 |
| K100L-6 | 1,5 | 2 | 920 | 75,5 | 0,75 | 3,8 | 15,6 | 0,0069 | 4,8 | 2,00 | 2,10 | 29 |
| K112M-6 | 2,2 | 3 | 935 | 79,5 | 0,76 | 5,3 | 22,5 | 0,0129 | 5,3 | 1,50 | 2,40 | 37 |
| K132S-6 | 3 | 4 | 960 | 86,4 | 0,76 | 6,6 | 30 | 0,0274 | 6,4 | 2,10 | 3,20 | 52 |
| K132M-6 | 4 | 5,5 | 960 | 86,4 | 0,76 | 8,8 | 40 | 0,0343 | 7,0 | 1,80 | 3,60 | 59 |
| K132M-6 | 5,5 | 7,5 | 960 | 86,0 | 0,77 | 12 | 55 | 0,0431 | 7,5 | 2,10 | 4,00 | 72 |
| K160M-6 | 7,5 | 10 | 970 | 87,4 | 0,78 | 15,9 | 74 | 0,0880 | 6,1 | 2,27 | 2,76 | 98 |
| K160L-6 | 11 | 15 | 970 | 89,8 | 0,77 | 23 | 108 | 0,1160 | 6,0 | 2,28 | 2,83 | 121 |
| K180L-6 | 15 | 20 | 970 | 91,0 | 0,81 | 29 | 148 | 0,2070 | 6,6 | 2,36 | 2,93 | 164 |
| K200L-6 | 18,5 | 25 | 970 | 93,0 | 0,81 | 36 | 182 | 0,3150 | 6,7 | 2,68 | 2,71 | 208 |
| K200L-6 | 22 | 30 | 970 | 93,7 | 0,83 | 41 | 217 | 0,3600 | 6,4 | 2,60 | 2,72 | 217 |
| K225M-6 | 30 | 40 | 980 | 91,8 | 0,84 | 56 | 292 | 0,5470 | 6,8 | 2,59 | 2,69 | 287 |
| K250M-6 | 37 | 50 | 980 | 94,8 | 0,86 | 66 | 361 | 0,8340 | 6,0 | 2,15 | 2,40 | 355 |
| K280S-6 | 45 | 60 | 980 | 93,6 | 0,86 | 81 | 439 | 1,3900 | 6,2 | 1,89 | 2,44 | 456 |
| K280M-6 | 55 | 75 | 980 | 95,4 | 0,86 | 97 | 536 | 1,6500 | 6,2 | 1,80 | 2,50 | 502 |
| K315S-6 | 75 | 100 | 990 | 93,9 | 0,86 | 134 | 723 | 4,1100 | 6,4 | 2,11 | 2,83 | 786 |
| K315M-6 | 90 | 125 | 990 | 94,3 | 0,86 | 160 | 868 | 4,2800 | 6,9 | 1,94 | 2,84 | 884 |
| K315L-6 | 110 | 150 | 990 | 94,4 | 0,86 | 196 | 1.061 | 5,4500 | 6,5 | 2,20 | 2,80 | 964 |
| K315L-6 | 132 | 180 | 990 | 94,6 | 0,87 | 232 | 1.273 | 6,1200 | 6,5 | 1,95 | 2,86 | 1 060 |
| K355M-6 | 160 | 220 | 990 | 95,1 | 0,88 | 276 | 1.543 | 8,8500 | 6,3 | 2,09 | 2,98 | 1 554 |
| K355M-6 | 200 | 270 | 990 | 95,5 | 0,88 | 344 | 1.929 | 10,7620 | 7,0 | 1,70 | 3,40 | 1 768 |
| K355L-6 | 250 | 340 | 990 | 95,4 | 0,88 | 430 | 2.412 | 12,8000 | 7 | 1,7 | 3,3 | 1 902 |
| K400-6 | 315 | 430 | 990 | 95,8 | 0,88 | 537 | 3.039 | 18 | 6,5 | 1,42 | 3,17 | 3.500 |
| K400-6 | 355 | 480 | 990 | 96,2 | 0,88 | 606 | 3.424 | 19 | 6,6 | 1,2 | 3,4 | 3.600 |
| K400-6 | 400 | 540 | 990 | 95,5 | 0,88 | 688 | 3.859 | 21,7 | 7,2 | 1,4 | 1,3 | 3.800 |
| K400-6 | 450 | 610 | 990 | 95,8 | 0,89 | 759 | 4.341 | 22 | 6,5 | 1,1 | 3,2 | 3.870 |
| K400-6 | 500 | 680 | 990 | 95,5 | 0,86 | 880 | 4.823 | 23,4 | 7,1 | 1,7 | 3,7 | 4.000 |
| K400-6 | 560 | 760 | 985 | 95,7 | 0,87 | 976 | 5.429 | 24 | 7,1 | 1,5 | 3,9 | 4.100 |
| K450L-6 | 630 | 850 | 995 | 96,7 | 0,85 | 1110 | 6.046 | 45,1 | 6,5 | 1,4 | 1,8 | 4.700 |
| K450L-6 | 710 | 965 | 995 | 96,7 | 0,85 | 1251 | 6.814 | 48,6 | 6,5 | 1,4 | 1,8 | 5.100 |
| K450L-6 | 800 | 1090 | 995 | 96,7 | 0,85 | 1410 | 7.678 | 54,2 | 6,5 | 1,4 | 1,8 | 5.500 |
| K500-6 | 900 | 1225 | 995 | 97 | 0,86 | 1563 | 8.638 | 68,5 | 6,5 | 1 | 1,8 | 5.800 |
| K500-6 | 1000 | 1360 | 995 | 97 | 0,86 | 1737 | 9.598 | 72,1 | 6,5 | 1 | 1,8 | 6.100 |
| K500-6 | 1120 | 1525 | 995 | 97 | 0,86 | 1945 | 10.750 | 75,3 | 6,5 | 1 | 1,8 | 6.250 |
| K560-6 | 1250 | 1700 | 995 | 97 | 0,86 | 2171 | 11.997 | 80,5 | 6,5 | 0,8 | 1,8 | 6.900 |
| K560-6 | 1400 | 1900 | 995 | 97 | 0,86 | 2432 | 13.437 | 84,6 | 6,5 | 0,8 | 1,8 | 7.150 |

# K-series

Three-phase motors with squirrel cage, protection degree IP55

**8 POLES-750 Rpm**
380-420/220-240 V Y/Δ 50 Hz
660-725/380-420 V Y/Δ 50 Hz
Insulation class F

| TYPE | Power | | Speed | Efficiency | Power factor | Rated current (400V) | Nominal torque | Moment of inertia GD²/4 | Starting current ratio | Starting torque ratio | Breakdown torque | Net weight |
|---|---|---|---|---|---|---|---|---|---|---|---|---|
| | KW | HP | Rpm | % | συνφ | Amp | Nm | Kgm² | Ip/In | Mp/Mn | Mm/Mn | Kg |
| K80-8 | 0,18 | 0,25 | 630 | 49,5 | 0,61 | 0,86 | 2,7 | 0,0016 | 2,9 | 2,50 | 3,20 | 15 |
| K80-8 | 0,25 | 0,33 | 640 | 56,3 | 0,61 | 1,05 | 3,7 | 0,0021 | 2,8 | 2,40 | 3,10 | 17 |
| K90S-8 | 0,37 | 0,5 | 660 | 61,1 | 0,61 | 1,43 | 5,4 | 0,0029 | 3,5 | 2,30 | 3,10 | 21 |
| K90L-8 | 0,55 | 0,75 | 660 | 61,9 | 0,61 | 2,10 | 8,0 | 0,0035 | 3,7 | 2,20 | 2,60 | 24 |
| K100L-8 | 0,75 | 1 | 690 | 70,5 | 0,67 | 2,30 | 10,4 | 0,0063 | 3,9 | 2,30 | 2,90 | 28 |
| K100L-8 | 1,1 | 1,5 | 690 | 73,0 | 0,69 | 3,16 | 15,2 | 0,0077 | 4,0 | 2,80 | 2,80 | 33 |
| K112M-8 | 1,5 | 2 | 680 | 74,6 | 0,69 | 4,21 | 21,1 | 0,0138 | 4,8 | 2,30 | 3,10 | 45 |
| K132S-8 | 2,2 | 3 | 710 | 78,0 | 0,71 | 5,7 | 30 | 0,0290 | 5,2 | 1,90 | 2,90 | 51 |
| K132M-8 | 3 | 4 | 710 | 78,6 | 0,73 | 7,6 | 40 | 0,0380 | 5,2 | 2,00 | 3,10 | 61 |
| K160M-8 | 4 | 5,5 | 720 | 81,6 | 0,73 | 9,7 | 53 | 0,0649 | 5,3 | 1,80 | 2,90 | 89 |
| K160M-8 | 5,5 | 7,5 | 720 | 83,3 | 0,74 | 12,9 | 73 | 0,0821 | 6,0 | 2,10 | 3,20 | 107 |
| K160L-8 | 7,5 | 10 | 720 | 86,0 | 0,75 | 16,8 | 99 | 0,1140 | 6,0 | 2,10 | 3,30 | 120 |
| K180L-8 | 11 | 15 | 730 | 87,9 | 0,76 | 23,8 | 144 | 0,1670 | 6,4 | 2,10 | 3,00 | 158 |
| K200L-8 | 15 | 20 | 730 | 88,3 | 0,76 | 32 | 196 | 0,3250 | 6,3 | 2,20 | 2,90 | 228 |
| K225S-8 | 18,5 | 25 | 730 | 90,4 | 0,76 | 39 | 242 | 0,4810 | 6,6 | 2,20 | 2,80 | 258 |
| K225M-8 | 22 | 30 | 740 | 91,2 | 0,78 | 45 | 284 | 0,5310 | 7,1 | 2,20 | 3,00 | 282 |
| K250M-8 | 30 | 40 | 740 | 91,5 | 0,79 | 60 | 387 | 0,8090 | 6,0 | 2,00 | 3,00 | 367 |
| K280S-8 | 37 | 50 | 740 | 92,0 | 0,79 | 74 | 478 | 1,3810 | 5,7 | 2,10 | 2,80 | 468 |
| K280M-8 | 45 | 60 | 740 | 92,5 | 0,79 | 89 | 581 | 1,7210 | 5,8 | 2,10 | 2,90 | 515 |
| K315S-8 | 55 | 75 | 740 | 93,4 | 0,81 | 105 | 710 | 4,5900 | 5,0 | 1,60 | 2,90 | 752 |
| K315M-8 | 75 | 100 | 740 | 93,4 | 0,81 | 143 | 968 | 5,3600 | 6,1 | 2,00 | 2,80 | 870 |
| K315L-8 | 90 | 125 | 740 | 94,2 | 0,82 | 168 | 1.161 | 6,1100 | 6,3 | 1,80 | 2,90 | 976 |
| K315L-8 | 110 | 150 | 740 | 94,5 | 0,82 | 205 | 1.420 | 6,5500 | 6,4 | 1,70 | 3,10 | 1.096 |
| K355M-8 | 132 | 180 | 740 | 94,3 | 0,82 | 247 | 1.704 | 12,8550 | 6,5 | 1,80 | 3,10 | 1.556 |
| K355M-8 | 160 | 220 | 740 | 94,6 | 0,82 | 298 | 2.065 | 14,3400 | 6,7 | 1,80 | 3,40 | 1.704 |
| K355L-8 | 200 | 270 | 740 | 94,9 | 0,83 | 367 | 2.581 | 15,8240 | 6,0 | 1,70 | 3,10 | 1.989 |
| K400-8 | 250 | 340 | 740 | 95,1 | 0,80 | 473 | 3.226 | 25,4 | 6,8 | 1,4 | 3,8 | 3.200 |
| K400-8 | 315 | 430 | 740 | 95,5 | 0,86 | 557 | 4.065 | 27,5 | 6,1 | 1 | 2,9 | 3.250 |
| K400-8 | 355 | 480 | 740 | 95,5 | 0,82 | 651 | 4.581 | 29,2 | 5,9 | 1,3 | 3 | 3.300 |
| K400-8 | 400 | 540 | 745 | 95,2 | 0,81 | 747 | 5.128 | 31,1 | 5,7 | 1,2 | 3 | 3.350 |
| K400-8 | 450 | 610 | 740 | 95,6 | 0,8 | 852 | 5.807 | 29 | 6 | 1,5 | 1,8 | 3.760 |
| K450-8 | 500 | 680 | 745 | 95,8 | 0,8 | 945 | 6.409 | 44,1 | 5,6 | 1,2 | 1,8 | 4.750 |
| K450-8 | 560 | 760 | 745 | 95,8 | 0,8 | 1058 | 7.179 | 49,5 | 5,6 | 1,2 | 1,8 | 5220 |
| K450-8 | 630 | 850 | 745 | 96 | 0,8 | 1188 | 8.076 | 54,8 | 5,6 | 1,2 | 1,8 | 5600 |
| K500-8 | 710 | 965 | 745 | 96 | 0,81 | 1323 | 9.101 | 70,1 | 5,6 | 1 | 1,8 | 5750 |
| K500-8 | 800 | 1090 | 745 | 96,2 | 0,81 | 1487 | 10.255 | 73,2 | 5,6 | 1 | 1,8 | 5950 |
| K500-8 | 900 | 1225 | 745 | 96,2 | 0,81 | 1673 | 11.537 | 76,8 | 5,6 | 1 | 1,8 | 6150 |
| K560-8 | 1000 | 1360 | 745 | 96,5 | 0,81 | 1854 | 12.819 | 81,8 | 5,6 | 0,8 | 1,8 | 6850 |
| K560-8 | 1120 | 1525 | 745 | 96,8 | 0,81 | 2070 | 14.357 | 84,1 | 5,6 | 0,8 | 1,8 | 7050 |
| K560-8 | 1250 | 1700 | 745 | 97 | 0,81 | 2305 | 16.023 | 88,4 | 5,6 | 0,8 | 1,8 | 7300 |

# K-series

Dimension sheet

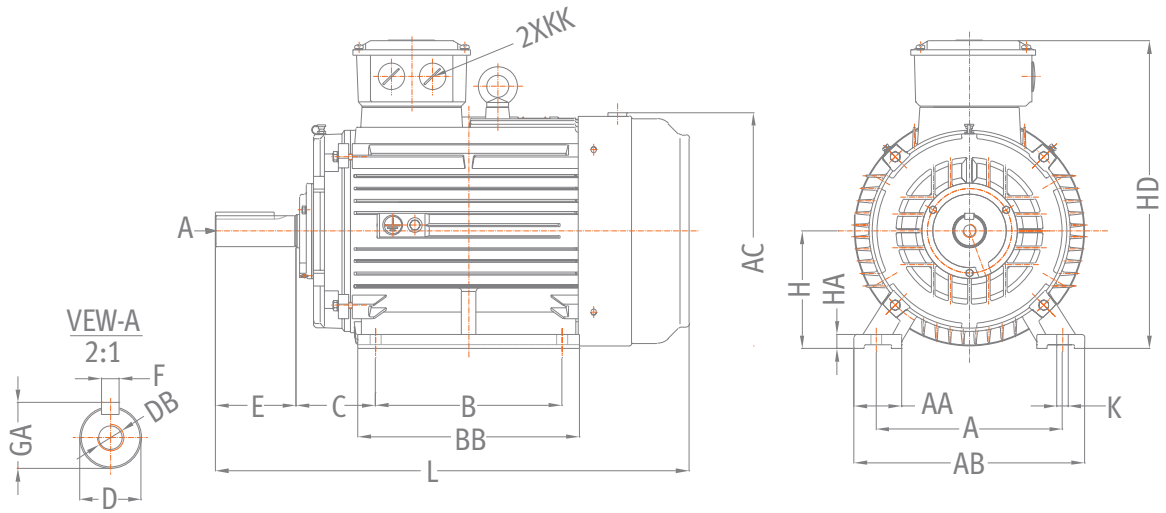


## MOUNTING B3

SIZE 80-355

| TYPE | H | A | B | C | AA | AB | BB | AC | HD | HA | KK | K | D | E | F | GA | DB | L |
|---|---|---|---|---|---|---|---|---|---|---|---|---|---|---|---|---|---|---|
| K80 | 80 | 125 | 100 | 50 | 34 | 160 | 130 | 175 | 230 | 10 | M25x1.5 | 10 | 19 | 40 | 6 | 21.5 | M6x16 | 295 |
| K90S | 90 | 140 | 100 | 56 | 36 | 180 | 135 | 190 | 260 | 12.5 | M25x1.5 | 10 | 24 | 50 | 8 | 27 | M8x19 | 320 |
| K90L | | | 125 | | | | 160 | | | | | | | | | | | 345 |
| K100L | 100 | 160 | 140 | 63 | 40 | 200 | 182 | 215 | 270 | 14 | M25x1.5 | 12 | 28 | 60 | 8 | 31 | M10x22 | 385 |
| K112M | 112 | 190 | 140 | 70 | 45 | 230 | 195 | 236 | 310 | 14 | M32x1.5 | 12 | 28 | 60 | 8 | 31 | M10x22 | 415 |
| K132S | 132 | 216 | 140 | 89 | 52 | 265 | 208 | 275 | 350 | 16 | M32x1.5 | 12 | 38 | 80 | 10 | 41 | M12x28 | 490 |
| K132M | | | 178 | | | | 245 | | | | | | | | | | | 520 |
| K160M | 160 | 254 | 210 | 108 | 65 | 320 | 260 | 330 | 425 | 19 | M40x1.5 | 14.5 | 42 | 110 | 12 | 45 | M16x36 | 610 |
| K160L | | | 254 | | | | 305 | | | | | | | | | | | 655 |
| K180M | 180 | 279 | 241 | 121 | 74 | 350 | 297 | 380 | 460 | 22 | M40x1.5 | 14.5 | 48 | 110 | 14 | 51.5 | M16x36 | 680 |
| K180L | | | 279 | | | | 335 | | | | | | | | | | | 720 |
| K200L | 200 | 318 | 305 | 133 | 75 | 395 | 370 | 420 | 515 | 25 | M50x1.5 | 18.5 | 55 | 110 | 16 | 59 | M20x42 | 760 |
| K225S | 225 | 356 | 286 | 149 | 75 | 436 | 355 | 465 | 560 | 28 | M50x1.5 | 18.5 | 60 | 140 | 18 | 64 | M20x42 | 825 |
| K225M-2 | | | 311 | | | | 380 | | | | | | 55 | 110 | 16 | 59 | | 820 |
| K225M-4-6-8 | | | 311 | | | | | | | | | | 60 | 140 | 18 | 64 | | 850 |
| K250M-2 | 250 | 406 | 349 | 168 | 88 | 495 | 440 | 520 | 620 | 33 | M63x1.5 | 24 | 60 | 140 | 18 | 64 | M20x42 | 925 |
| K250M-4-6-8 | | | | | | | | | | | | | 65 | | | 69 | | |
| K280S-2 | 280 | 457 | 368 | 190 | 109 | 550 | 535 | 570 | 685 | 35 | M63x1.5 | 24 | 65 | 140 | 18 | 69 | M20x42 | 970 |
| K280S-4-6-8 | | | 368 | | | | | | | | | | 75 | | 20 | 79.5 | | |
| K280M-2 | | | 419 | | | | 535 | | | | | | 65 | | 18 | 69 | | 1010 |
| K280M-4-6-8 | | | 419 | | | | | | | | | | 75 | | 20 | 79.5 | | |
| K315S-2 | 315 | 508 | 406 | 216 | 120 | 635 | 515 | 650 | 820 | 45 | M63x1.5 | 28 | 65 | 140 | 18 | 69 | M20x42 | 1160 |
| K315S-4-6-8 | | | | | | | | | | | | | 80 | 170 | 22 | 85 | | 1190 |
| K315M-2 | | | 457 | | | | 625 | | | | | | 65 | 140 | 18 | 69 | | 1270 |
| K315M-4-6-8 | | | | | | | | | | | | | 80 | 170 | 22 | 85 | | 1300 |
| K315L-2 | | | 508 | | | | | | | | | | 65 | 140 | 18 | 69 | | 1270 |
| K315L-4-6-8 | | | | | | | | | | | | | 80 | 170 | 22 | 85 | | 1300 |
| K355M-2 | 355 | 610 | 560 | 254 | 125 | 735 | 775 | 735 | 1000 | 49 | M72x1.5 | 28 | 75 | 140 | 20 | 79.5 | M24x50 | 1500 |
| K355M-4-6-8 | | | | | | | | | | | | | 100 | 210 | 28 | 106 | | 1570 |
| K355L-2 | | | 630 | | | | | | | | | | 75 | 140 | 20 | 79.5 | M24x50 | 1500 |
| K355L-4-6-8 | | | | | | | | | | | | | 100 | 210 | 28 | 106 | | 1570 |

# K-series

Dimension sheet

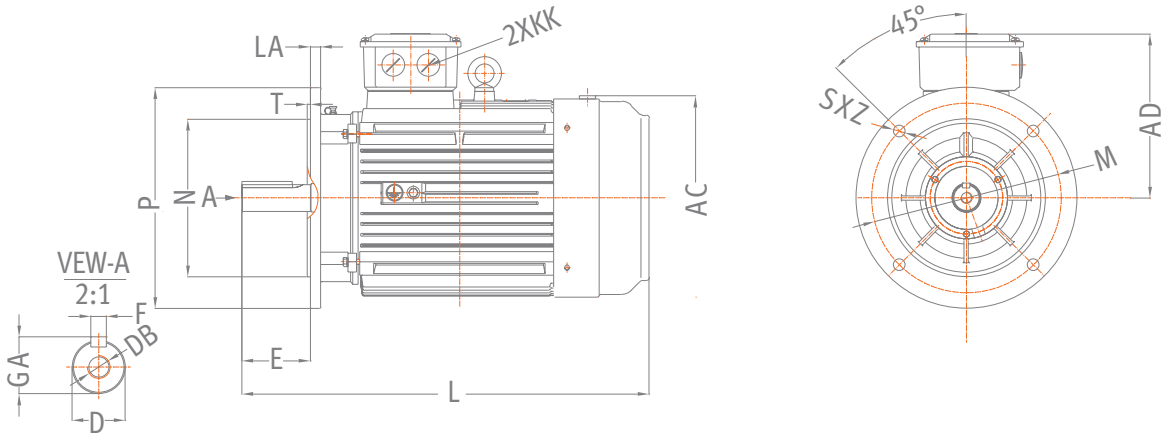


## MOUNTING B5

SIZE 80-355

| TYPE | P | N | LA | M | T | S | Z | D | E | F | KK | GA | DB | AD | AC | L |
|---|---|---|---|---|---|---|---|---|---|---|---|---|---|---|---|---|
| K80 | 200 | 130 | 12 | 165 | 3,5 | 12 | 4 | 19 | 40 | 6 | M25x1.5 | 21,5 | M6x16 | 148 | 175 | 295 |
| K90S | 200 | 130 | 12 | 165 | 3,5 | 12 | 4 | 24 | 50 | 8 | M25x1.5 | 27 | M8x19 | 165 | 190 | 320 |
| K90L | | | | | | | | | | | | | | | | 345 |
| K100L | 250 | 180 | 12 | 215 | 4 | 14.5 | 4 | 28 | 60 | 8 | M25x1.5 | 31 | M10x22 | 170 | 215 | 385 |
| K112M | 250 | 180 | 12 | 215 | 4 | 14.5 | 4 | 28 | 60 | 8 | M32x1.5 | 31 | M10x22 | 195 | 236 | 415 |
| K132S | 300 | 230 | 13 | 265 | 4 | 14.5 | 4 | 38 | 80 | 10 | M32x1.5 | 41 | M12x28 | 215 | 275 | 490 |
| K132M | | | | | | | | | | | | | | | | 520 |
| K160M | 350 | 250 | 15 | 300 | 5 | 18.5 | 4 | 42 | 110 | 12 | M40x1.5 | 45 | M16x36 | 265 | 330 | 610 |
| K160L | | | | | | | | | | | | | | | | 655 |
| K180M | 350 | 250 | 15 | 300 | 5 | 18.5 | 4 | 48 | 110 | 14 | M40x1.5 | 51,5 | M16x36 | 280 | 380 | 680 |
| K180L | | | | | | | | | | | | | | | | 720 |
| K200L | 400 | 300 | 17 | 350 | 5 | 18.5 | 4 | 55 | 110 | 16 | M50x1.5 | 59 | M20x42 | 315 | 420 | 760 |
| K225S | 450 | 350 | 20 | 400 | 5 | 18.5 | 8 | 60 | 140 | 18 | M50x1.5 | 64 | M20x42 | 335 | 465 | 825 |
| K225M-2 | | | | | | | | 55 | 110 | 16 | | 59 | | | | 820 |
| K225M-4-6-8 | | | | | | | | 60 | 140 | 18 | | 64 | | | | 850 |
| K250M-2 | 550 | 450 | 20 | 500 | 5 | 18.5 | 8 | 60 | 140 | 18 | M63x1.5 | 64 | M20x42 | 375 | 520 | 925 |
| K250M-4-6-8 | | | | | | | | 65 | | | | 69 | | | | |
| K280S-2 | 550 | 450 | 20 | 500 | 5 | 18.5 | 8 | 65 | 140 | 18 | M63x1.5 | 69 | M20x42 | 405 | 570 | 970 |
| K280S-4-6-8 | | | | | | | | 75 | | 20 | | 79,5 | | | | |
| K280M-2 | | | | | | | | 65 | | 18 | | 69 | | | | 1010 |
| K280M-4-6-8 | | | | | | | | 75 | | 20 | | 79,5 | | | | |
| K315S-2 | 660 | 550 | 24 | 600 | 6 | 24 | 8 | 65 | 140 | 18 | M63x1.5 | 69 | M20x42 | 500 | 650 | 1160 |
| K315S-4-6-8 | | | | | | | | 80 | 170 | 22 | | 85 | | | | 1190 |
| K315M-2 | | | | | | | | 65 | 140 | 18 | | 69 | | | | 1270 |
| K315M-4-6-8 | | | | | | | | 80 | 170 | 22 | | 85 | | | | 1300 |
| K315L-2 | | | | | | | | 65 | 140 | 18 | | 69 | | | | 1270 |
| K315L-4-6-8 | | | | | | | | 80 | 170 | 22 | | 85 | | | | 1300 |
| K355M-2 | 800 | 680 | 25 | 740 | 6 | 24 | 8 | 75 | 140 | 20 | M72x1.5 | 79,5 | M24x50 | 645 | 735 | 1500 |
| K355M-4-6-8 | | | | | | | | 100 | 210 | 28 | | 106 | | | | 1570 |
| K355L-2 | | | | | | | | 75 | 140 | 20 | | 79,5 | M24x50 | | | 1500 |
| K355L-4-6-8 | | | | | | | | 100 | 210 | 28 | | 106 | | | | 1570 |

# K-series

Dimension sheet

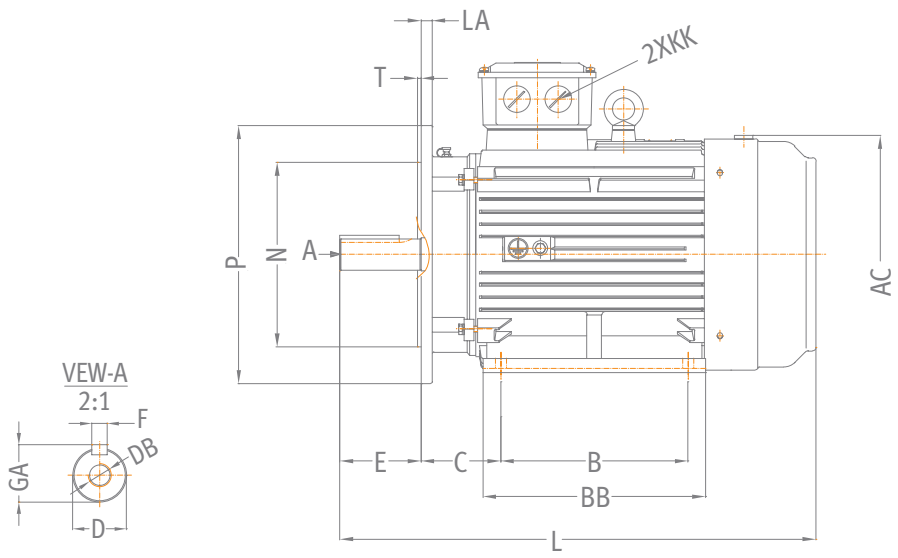


## MOUNTING B35

SIZE 80-355

| TYPE | H | A | B | C | AA | AB | BB | AC | HD | HA | KK | K |
|---|---|---|---|---|---|---|---|---|---|---|---|---|
| K80 | 80 | 125 | 100 | 50 | 34 | 160 | 130 | 175 | 230 | 10 | M25x1.5 | 10 |
| K90S | 90 | 140 | 100 | 56 | 36 | 180 | 135 | 190 | 260 | 12.5 | M25x1.5 | 10 |
| K90L | | | 125 | | | | 160 | | | | | |
| K100L | 100 | 160 | 140 | 63 | 40 | 200 | 182 | 215 | 270 | 14 | M25x1.5 | 12 |
| K112M | 112 | 190 | 140 | 70 | 45 | 230 | 195 | 236 | 310 | 14 | M32x1.5 | 12 |
| K132S | 132 | 216 | 140 | 89 | 52 | 265 | 208 | 275 | 350 | 16 | M32x1.5 | 12 |
| K132M | | | 178 | | | | 245 | | | | | |
| K160M | 160 | 254 | 210 | 108 | 65 | 320 | 260 | 330 | 425 | 19 | M40x1.5 | 14.5 |
| K160L | | | 254 | | | | 305 | | | | | |
| K180M | 180 | 279 | 241 | 121 | 74 | 350 | 297 | 380 | 460 | 22 | M40x1.5 | 14.5 |
| K180L | | | 279 | | | | 335 | | | | | |
| K200L | 200 | 318 | 305 | 133 | 75 | 395 | 370 | 420 | 515 | 25 | M50x1.5 | 18.5 |
| K225S | 225 | 356 | 286 | 149 | 75 | 436 | 355 | 465 | 560 | 28 | M50x1.5 | 18.5 |
| K225M-2 | | | 311 | | | | 380 | | | | | |
| K225M-4-6-8 | | | | | | | | | | | | |
| K250M-2 | 250 | 406 | 349 | 168 | 88 | 495 | 440 | 520 | 620 | 33 | M63x1.5 | 24 |
| K250M-4-6-8 | | | | | | | | | | | | |
| K280S-2 | 280 | 457 | 368 | 190 | 109 | 550 | 535 | 570 | 685 | 35 | M63x1.5 | 24 |
| K280S-4-6-8 | | | | | | | | | | | | |
| K280M-2 | | | 419 | | | | | | | | | |
| K280M-4-6-8 | | | | | | | | | | | | |
| K315S-2 | 315 | 508 | 406 | 216 | 120 | 635 | 515 | 650 | 820 | 45 | M63x1.5 | 28 |
| K315S-4-6-8 | | | | | | | | | | | | |
| K315M-2 | | | 457 | | | | 625 | | | | | |
| K315M-4-6-8 | | | | | | | | | | | | |
| K315L-2 | | | 508 | | | | | | | | | |
| K315L-4-6-8 | | | | | | | | | | | | |
| K355M-2 | 355 | 610 | 560 | 254 | 125 | 735 | 775 | 735 | 1000 | 49 | M72x1.5 | 28 |
| K355M-4-6-8 | | | | | | | | | | | | |
| K355L-2 | | | 630 | | | | | | | | | |
| K355L-4-6-8 | | | | | | | | | | | | |

# K-series

## Dimension sheet

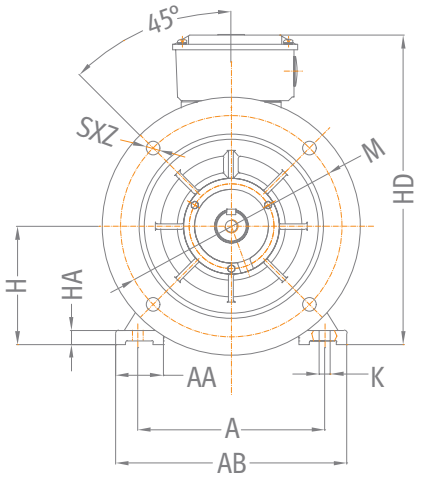


### MOUNTING B35

SIZE 80-355

| P | N | LA | M | T | S | Z | D | E | F | GA | DB | L | TYPE |
|---|---|---|---|---|---|---|---|---|---|---|---|---|---|
| 200 | 130 | 12 | 165 | 3,5 | 12 | 4 | 19 | 40 | 6 | 21.5 | M6x16 | 295 | K80 |
| 200 | 130 | 12 | 165 | 3,5 | 12 | 4 | 24 | 50 | 8 | 27 | M8x19 | 320 | K90S |
| | | | | | | | | | | | | 345 | K90L |
| 250 | 180 | 12 | 215 | 4 | 14.5 | 4 | 28 | 60 | 8 | 31 | M10x22 | 385 | K100L |
| 250 | 180 | 12 | 215 | 4 | 14.5 | 4 | 28 | 60 | 8 | 31 | M10x22 | 415 | K112M |
| 300 | 230 | 13 | 265 | 4 | 14.5 | 4 | 38 | 80 | 10 | 41 | M12x28 | 490 | K132S |
| | | | | | | | | | | | | 520 | K132M |
| 350 | 250 | 15 | 300 | 5 | 18.5 | 4 | 42 | 110 | 12 | 45 | M16x36 | 610 | K160M |
| | | | | | | | | | | | | 655 | K160L |
| 350 | 250 | 15 | 300 | 5 | 18.5 | 4 | 48 | 110 | 14 | 51.5 | M16x36 | 680 | K180M |
| | | | | | | | | | | | | 720 | K180L |
| 400 | 300 | 17 | 350 | 5 | 18.5 | 4 | 55 | 110 | 16 | 59 | M20x42 | 760 | K200L |
| 450 | 350 | 20 | 400 | 5 | 18.5 | 8 | 60 | 140 | 18 | 64 | M20x42 | 825 | K225S |
| | | | | | | | 55 | 110 | 16 | 59 | | 820 | K225M-2 |
| | | | | | | | 60 | 140 | 18 | 64 | | 850 | K225M-4-6-8 |
| 550 | 450 | 20 | 500 | 5 | 18.5 | 8 | 60 | 140 | 18 | 64 | M20x42 | 925 | K250M-2 |
| | | | | | | | 65 | | | 69 | | | K250M-4-6-8 |
| 550 | 450 | 20 | 500 | 5 | 18.5 | 8 | 65 | 140 | 18 | 69 | M20x42 | 970 | K280S-2 |
| | | | | | | | 75 | | 20 | 79.5 | | | K280S-4-6-8 |
| | | | | | | | 65 | | 18 | 69 | | 1010 | K280M-2 |
| | | | | | | | 75 | | 20 | 79.5 | | | K280M-4-6-8 |
| 660 | 550 | 24 | 600 | 6 | 24 | 8 | 65 | 140 | 18 | 69 | M20x42 | 1160 | K315S-2 |
| | | | | | | | 80 | 170 | 22 | 85 | | 1190 | K315S-4-6-8 |
| | | | | | | | 65 | 140 | 18 | 69 | | 1270 | K315M-2 |
| | | | | | | | 80 | 170 | 22 | 85 | | 1300 | K315M-4-6-8 |
| | | | | | | | 65 | 140 | 18 | 69 | | 1270 | K315L-2 |
| | | | | | | | 80 | 170 | 22 | 85 | | 1300 | K315L-4-6-8 |
| 800 | 680 | 25 | 740 | 6 | 24 | 8 | 75 | 140 | 20 | 79.5 | M24x50 | 1500 | K355M-2 |
| | | | | | | | 100 | 210 | 28 | 106 | | 1570 | K355M-4-6-8 |
| | | | | | | | 75 | 140 | 20 | 79.5 | | 1500 | K355L-2 |
| | | | | | | | 100 | 210 | 28 | 106 | | 1570 | K355L-4-6-8 |

# K-series

Dimension sheet

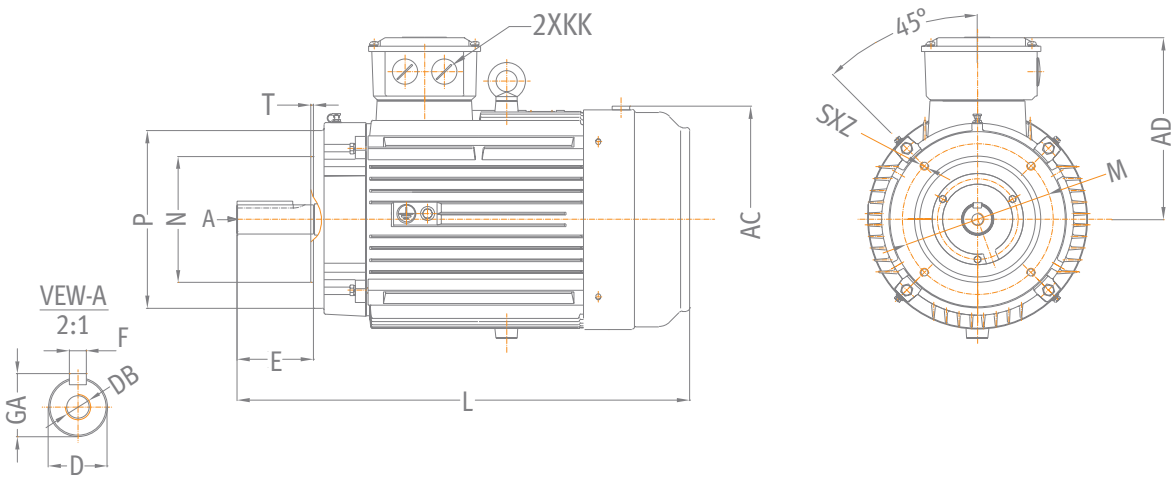


## MOUNTING B14

### SMALL FLANGE B14 A

SIZE 80-132

| TYPE | P | N | M | T | S | Z | D | E | F | GA | DB | KK | AC | AD | L |
|---|---|---|---|---|---|---|---|---|---|---|---|---|---|---|---|
| K80 | 120 | 80 | 100 | 3 | M6 | 4 | 19 | 40 | 6 | 21.5 | M6x16 | M25x1.5 | 175 | 148 | 295 |
| K90S | 140 | 95 | 115 | 3 | M8 | 4 | 24 | 50 | 8 | 27 | M8x19 | M25x1.5 | 190 | 165 | 320 |
| K90L | | | | | | | | | | | | | | | 345 |
| K100L | 160 | 110 | 130 | 3.5 | M8 | 4 | 28 | 60 | 8 | 31 | M10x22 | M25x1.5 | 215 | 170 | 385 |
| K112L | 160 | 110 | 130 | 3.5 | M8 | 4 | 28 | 60 | 8 | 31 | M10x22 | M32x1.5 | 236 | 195 | 415 |
| K132S | 200 | 130 | 165 | 3.5 | M10 | 4 | 38 | 80 | 10 | 41 | M12x28 | M32x1.5 | 275 | 215 | 490 |
| K132M | | | | | | | | | | | | | | | 520 |

## MOUNTING B14

### LARGE FLANGE B14 B

SIZE 80-132

| TYPE | P | N | M | T | S | Z | D | E | F | GA | KK | DB | AC | AD | L |
|---|---|---|---|---|---|---|---|---|---|---|---|---|---|---|---|
| K80 | 160 | 110 | 130 | 3.5 | M8 | 4 | 19 | 40 | 6 | 21.5 | M25x1.5 | M6x16 | 175 | 148 | 295 |
| K90S | 160 | 110 | 130 | 3.5 | M8 | 4 | 24 | 50 | 8 | 27 | M25x1.5 | M8x19 | 190 | 165 | 320 |
| K90L | | | | | | | | | | | | | | | 345 |
| K100L | 200 | 130 | 165 | 3.5 | M10 | 4 | 28 | 60 | 8 | 31 | M25x1.5 | M10x22 | 215 | 170 | 385 |
| K112L | 200 | 130 | 165 | 3.5 | M10 | 4 | 28 | 60 | 8 | 31 | M32x1.5 | M10x22 | 236 | 195 | 415 |
| K132S | 250 | 180 | 215 | 4 | M12 | 4 | 38 | 80 | 10 | 41 | M32x1.5 | M12x28 | 275 | 215 | 490 |
| K132M | | | | | | | | | | | | | | | 520 |

# K-series

Dimension sheet

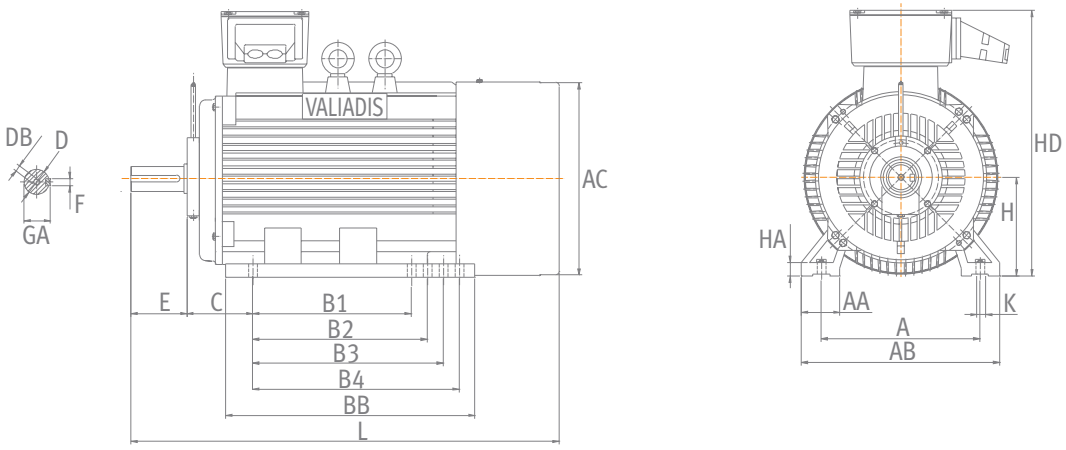


## MOUNTING B3

SIZE 400-560

| TYPE | H | A | B1 | B2 | B3 | B4 | C | AA | AB |
|---|---|---|---|---|---|---|---|---|---|
| K400 - 2 | 400 | 686 | 630 | 710 | – | – | 280 | 120 | 806 |
| K400 4-6-8 | | | | | | | | | |
| K450 - 2 | 450 | 800 | 900 | 1000 | 1120 | 1250 | 280 | 225 | 980 |
| K450 4-6-8 | | | | | | | | | |
| K500 4-6-8 | 500 | 1000 | 1400 | – | – | – | 315 | 180 | 1080 |
| K560 4-6-8 | 560 | 1000 | 1400 | – | – | – | 355 | 210 | 1170 |

| TYPE | BB | AC | HD | HA | K | D | E | F | DB | L |
|---|---|---|---|---|---|---|---|---|---|---|
| K400 - 2 | 1090 | 810 | 1090 | 45 | ∅35 | 80 | 170 | 22 | M20 | 1841 |
| K400 4-6-8 | | | | | | 110m6 | 210 | 28 | M24 | 1881 |
| K450 - 2 | 1495 | 1035 | 1310 | 45 | ∅35 | 95 | 170 | 25 | M24 | 2360 |
| K450 4-6-8 | | | | | | 120 | 210 | 32 | | 2400 |
| K500 4-6-8 | 1600 | 1095 | 1365 | 65 | ∅42 | 140 | 250 | 36 | M24 | 2520 |
| K560 4-6-8 | 1680 | 1195 | 1480 | 76 | ∅42 | 160 | 300 | 40 | M24 | 2650 |

# K-series

Dimension sheet

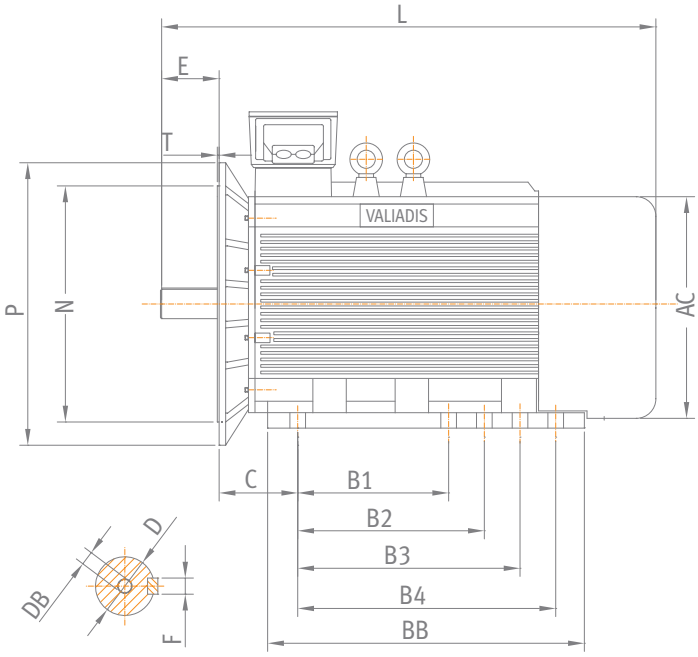


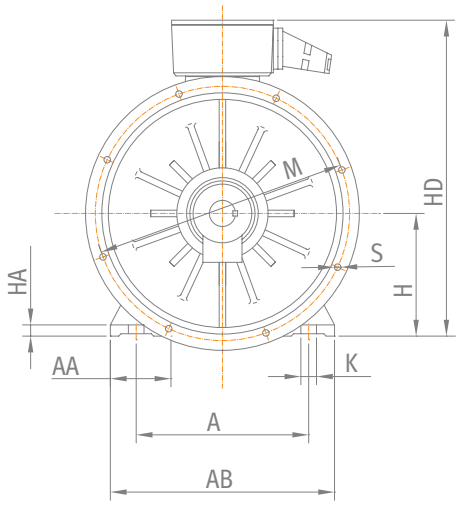


## MOUNTING B35

SIZE 400-560

| TYPE | P | N | M | T | S | H | A | B1 | B2 | B3 | B4 | C |
|---|---|---|---|---|---|---|---|---|---|---|---|---|
| K400 - 2 | 1000 | 880 | 940 | 6 | 8∅28 | 400 | 686 | 630 | 710 | – | – | 280 |
| K400 4-6-8 | | | | | | | | | | | | |
| K450 - 2 | 1000 | 880 | 940 | 6 | 8∅28 | 450 | 800 | 900 | 1000 | 1120 | 1250 | 280 |
| K450 4-6-8 | | | | | | | | | | | | |
| K500 4-6-8 | 1150 | 1000 | 1080 | 6 | 8∅28 | 500 | 900 | 1120 | – | – | – | 315 |
| K560 4-6-8 | 1250 | 1120 | 1180 | 7 | 8∅28 | 560 | 1000 | 1400 | – | – | – | 355 |

| TYPE | AA | AB | BB | AC | HD | HA | K | D | E | F | DB | L |
|---|---|---|---|---|---|---|---|---|---|---|---|---|
| K400 - 2 | 120 | 806 | 1090 | 810 | 1075 | 45 | ∅35 | 80 | 170 | 22 | M20 | 1841 |
| K400 4-6-8 | | | | | | | | 110m6 | 210 | 28 | M24 | 1881 |
| K450 - 2 | 225 | 980 | 1495 | 1035 | 1310 | 45 | ∅35 | 95 | 170 | 25 | M24 | 2360 |
| K450 4-6-8 | | | | | | | | 120 | 210 | 32 | | 2400 |
| K500 4-6-8 | 180 | 1080 | 1600 | 1095 | 1365 | 65 | ∅42 | 140 | 250 | 36 | M24 | 2520 |
| K560 4-6-8 | 210 | 1170 | 1680 | 1195 | 1480 | 76 | ∅42 | 160 | 300 | 40 | M24 | 2650 |

# K-series

Dimension sheet

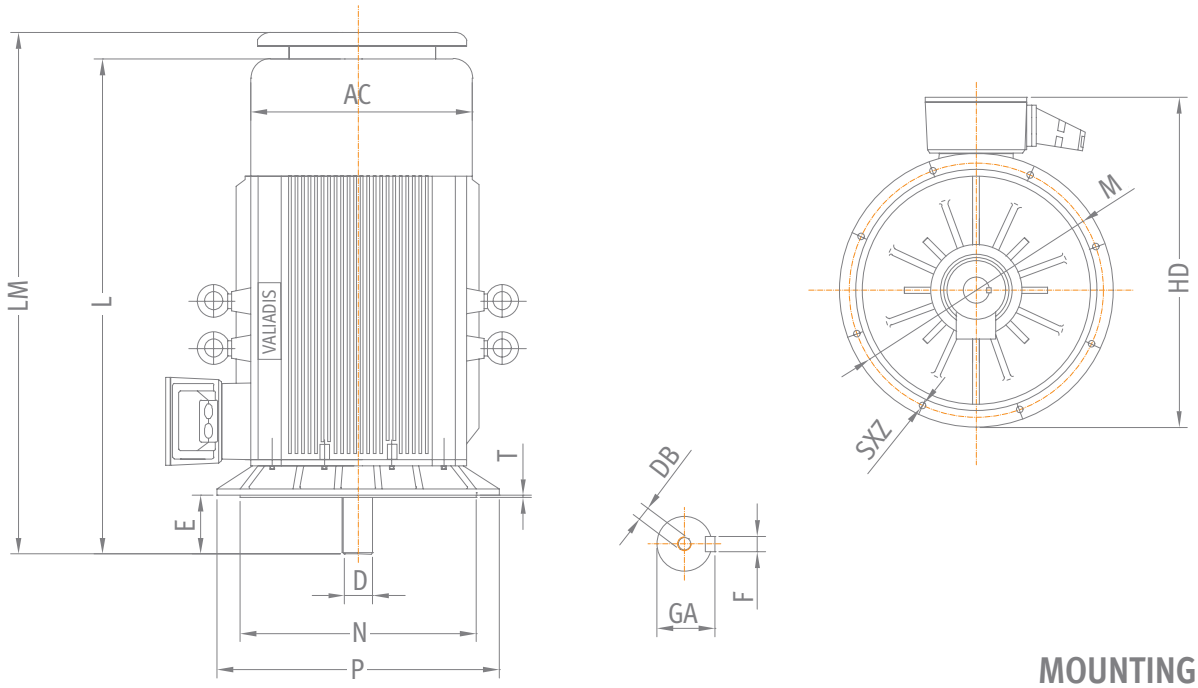


## MOUNTING V1

SIZE 400-560

| TYPE | P | N | M | T | S | D | E | F | GA | HD | AC | L | LM |
|---|---|---|---|---|---|---|---|---|---|---|---|---|---|
| K400-2 | 1000 | 880 | 940 | 6 | 8x∅28 | 80 | 170 | 22 | 85 | 1275 | 865 | 1841 | 2161 |
| K400-4-6-8 | | | | | | 110m6 | 210 | 28 | 116 | | | 1881 | 2201 |
| K450-2 | 1000 | 880 | 940 | 6 | 8x∅28 | 95 | 170 | 25 | 100 | 1536 | 1035 | 2360 | 2710 |
| K450-4-6-8 | | | | | | 120 | 210 | 32 | 127 | | | 2400 | 2750 |
| K500-4-6-8 | 1150 | 1000 | 1080 | 6 | 8x∅28 | 140 | 250 | 36 | 148 | 1576 | 1095 | 2520 | 2850 |
| K560-4-6-8 | 1250 | 1120 | 1180 | 7 | 8x∅28 | 160 | 300 | 40 | 168 | 1681 | 1195 | 2650 | 3000 |

## BEARINGS

| Frame | Drive-End | | Non-Drive-End | |
|---|---|---|---|---|
| | 2p | 4,6,8p | 2p | 4,6,8p |
| 80 | 6204ZZ C3 | 6204ZZ C3 | 6204ZZ C3 | 6204ZZ C3 |
| 90 | 6205ZZ C3 | 6205ZZ C3 | 6205ZZ C3 | 6205ZZ C3 |
| 100 | 6206ZZ C3 | 6206ZZ C3 | 6206ZZ C3 | 6206ZZ C3 |
| 112 | 6306ZZ C3 | 6306ZZ C3 | 6306ZZ C3 | 6306ZZ C3 |
| 132 | 6308ZZ C3 | 6308ZZ C3 | 6308ZZ C3 | 6308ZZ C3 |
| 160 | 6309C3 | 6309C3 | 6309C3 | 6309C3 |
| 180 | 6311C3 | 6311C3 | 6311C3 | 6311C3 |
| 200 | 6312C3 | 6312C3 | 6312C3 | 6312C3 |
| 225 | 6313C3 | 6313C3 | 6313C3 | 6313C3 |
| 250 | 6314C3 | 6314C3 | 6314C3 | 6314C3 |
| 280 | 6314C3 | 6317C3 | 6314C3 | 6317C3 |
| 315 | 6317C3 | 6319C3 or NU319 | 6317C3 | 6319C3 or NU319 |
| 355 | 6319C3 | 6322C3 or NU322 | 6319C3 | 6322C3 or NU322 |
| 400 | 6317C3 | 6326C3 or NU326 | 6317C3 | 6326C3 or NU326 |
| 450 | 6319C3 | 6328C3 or NU328 | 6319C3 | 6328C3 or NU328 |
| 500 | | 6330C3 or NU330 | | 6330C3 or NU330 |
| 560 | | 6330C3 or NU330 | | 6330C3 or NU330 |

# K-series

Three-phase motors with squirrel cage, protection degree IP55

**4 / 2 POLES-1.500 / 3.000 Rpm**
**CONSTANT TORQUE**
**DAHLANDER WINDING [Δ / YY]**
380-420 V 50 Hz
Insulation class F

| TYPE | Power | Speed | Efficiency | Power factor | Rated current (400V) | Starting current ratio | Starting torque ratio | Net weight |
|---|---|---|---|---|---|---|---|---|
| | KW | Rpm | % | συνφ | Amp | Ip/In | Mp/Mn | Kg |
| K80-4/2 | 0,45/0,6 | 1380/2710 | 57,5/63,0 | 0,74/0,77 | 1,69/1,79 | 3,8/4,0 | 1,6/1,7 | 17 |
| K80-4/2 | 0,6/0,8 | 1390/2750 | 59,7/63,8 | 0,78/0,91 | 2,12/2,09 | 3,8/4,5 | 1,6/1,8 | 18 |
| K90S-4/2 | 1/1,3 | 1345/2730 | 63,3/64,9 | 0,78/0,92 | 3,31/3,40 | 3,5/4,5 | 1,8/1,8 | 22 |
| K90L-4/2 | 1,4/1,9 | 1390/2790 | 75,1/70,6 | 0,82/0,91 | 3,25/4,00 | 4,8/5,4 | 2,1/2,3 | 28 |
| K100L-4/2 | 2/2,4 | 1430/2850 | 74,5/73,6 | 0,80/0,90 | 4,81/5,22 | 5,4/6,3 | 1,9/2,0 | 34 |
| K100LX-4/2 | 2,6/3,1 | 1410/2830 | 74,5/74,3 | 0,85/0,93 | 5,89/6,43 | 5,6/6,8 | 1,9/2,1 | 38 |
| K112M-4/2 | 3,6/4,3 | 1440/2870 | 82,5/79,7 | 0,82/0,90 | 7,86/9,6 | 6,6/7,2 | 2,2/2,0 | 47 |
| K132S-4/2 | 4,9/6 | 1425/2820 | 80,2/77,9 | 0,86/0,92 | 10,2/11,9 | 5,6/5,2 | 1,5/1,8 | 61 |
| K132M-4/2 | 6,5/9 | 1430/2845 | 83,4/82,0 | 0,88/0,93 | 13,4/15,2 | 6,7/6,4 | 1,7/1,7 | 73 |
| K160M-4/2 | 9/11 | 1450/2920 | 85,5/86,5 | 0,76/0,90 | 21,1/20,4 | 6,1/7,4 | 1,8/2,0 | 113 |
| K160L-4/2 | 13/16 | 1440/2905 | 87,4/84,3 | 0,88/0,93 | 23,4/27,5 | 6,6/7,9 | 1,9/2,4 | 133 |
| K180M-4/2 | 15/19 | 1460/2930 | 87,0/87,0 | 0,85/0,87 | 29,3/36,2 | 5,5/6,4 | 2,0/1,9 | 167 |
| K180L-4/2 | 18,5/22 | 1460/2930 | 89,3/86,9 | 0,90/0,93 | 33,1/39,3 | 6,0/7,5 | 1,6/1,8 | 181 |
| K200L-4/2 | 25/30 | 1465/2930 | 89,8/88,0 | 0,86/0,88 | 46,7/55,9 | 6,0/6,8 | 1,8/2,0 | 232 |
| K225S-4/2 | 30/35 | 1465/2945 | 90,2/89,0 | 0,86/0,89 | 55,8/63,8 | 6,0/6,8 | 1,8/2,0 | 287 |
| K225M-4/2 | 36/43 | 1465/2950 | 90,7/89,4 | 0,86/0,90 | 66,6/77,1 | 6,2/7,0 | 1,9/1,9 | 322 |
| K250M-4/2 | 45/54 | 1470/2960 | 91,5/89,8 | 0,86/0,90 | 86,2/96,4 | 6,5/7,0 | 1,9/2,1 | 381 |
| K280S-4/2 | 60/72 | 1470/2950 | 92,6/91,2 | 0,87/0,90 | 107/127 | 7,0/7,1 | 2,0/2,0 | 510 |
| K280M-4/2 | 75/85 | 1470/2955 | 93,0/91,0 | 0,86/0,89 | 135/151 | 6,8/7,0 | 1,9/1,9 | 600 |
| K315S-4/2 | 82/95 | 1475/2970 | 93,5/93,0 | 0,84/0,88 | 156/168 | 5,8/7,1 | 1,8/2,0 | 970 |
| K315M-4/2 | 95/115 | 1480/2970 | 94,0/93,4 | 0,83/0,88 | 176/202 | 5,9/7,3 | 1,9/1,9 | 1.080 |
| K315L-4/2 | 110/132 | 1480/2975 | 94,8/94,0 | 0,83/0,89 | 202/228 | 5,5/7,2 | 1,8/1,9 | 1.170 |
| K315LX-4/2 | 135/165 | 1480/2975 | 94,7/93,5 | 0,82/0,88 | 251/289 | 5,7/7,2 | 1,9/1,8 | 1.210 |

# K-series

Three-phase motors with squirrel cage, protection degree IP55

**4 / 2 POLES-1.500 / 3.000 Rpm**
**VARIABLE TORQUE**
**DAHLANDER WINDING [Y / YY]**
380-420 V 50 Hz
Insulation class F

| TYPE | Power | Speed | Efficiency | Power factor | Rated current (400V) | Starting current ratio | Starting torque ratio | Net weight |
|---|---|---|---|---|---|---|---|---|
| | KW | Rpm | % | συνφ | Amp | Ip/In | Mp/Mn | Kg |
| K80-4/2 | 0,18/0,7 | 1410/2875 | 52,0/64,0 | 0,65/0,77 | 0,77/2,05 | 3,5/5,5 | 1,6/2,2 | 16 |
| K80-4/2 | 0,25/0,9 | 1440/2880 | 53,3/63,1 | 0,62/0,74 | 1,07/2,79 | 3,2/5,4 | 3,0/3,1 | 17 |
| K90S-4/2 | 0,37/1,5 | 1420/2760 | 74,4/70,0 | 0,79/0,90 | 0,90/3,38 | 4,5/4,8 | 1,8/2,0 | 22 |
| K90L-4/2 | 0,5/2 | 1445/2855 | 78,0/72,1 | 0,74/0,86 | 1,24/4,63 | 5,8/6,2 | 2,4/2,4 | 28 |
| K100L-4/2 | 0,7/2,5 | 1425/2870 | 78,3/79,7 | 0,74/0,86 | 1,74/5,87 | 4,6/6,5 | 2,0/2,3 | 33 |
| K100LX-4/2 | 0,8/3 | 1430/2875 | 73,8/75,9 | 0,71/0,81 | 2,48/8,45 | 4,9/5,6 | 2,2/1,9 | 36 |
| K112M-4/2 | 1,1/4,1 | 1455/2870 | 85,0/79,7 | 0,82/0,90 | 2,48/9,57 | 6,6/7,2 | 1,6/2,0 | 47 |
| K132S-4/2 | 1,5/5,5 | 1445/2900 | 81,8/83,7 | 0,78/0,90 | 3,38/10,5 | 5,3/5,9 | 1,9/2,3 | 62 |
| K132M-4/2 | 2,2/9 | 1440/2880 | 83,4/85,7 | 0,78/0,91 | 4,90/15,1 | 5,2/7,4 | 1,9/2,2 | 85 |
| K160M-4/2 | 3/12 | 1450/2920 | 85,5/86,5 | 0,76/0,90 | 7,33/22,2 | 6,1/7,4 | 1,8/2,0 | 117 |
| K160L-4/2 | 4/16 | 1470/2920 | 87,1/89,3 | 0,73/0,89 | 9,71/30,7 | 6,1/8,1 | 2,5/2,5 | 134 |
| K180M-4/2 | 5,5/20 | 1460/2930 | 87,0/87,0 | 0,85/0,87 | 10,7/38,1 | 5,5/6,4 | 2,0/1,9 | 167 |
| K180L-4/2 | 6/24 | 1465/2925 | 88,8/87,1 | 0,90/0,93 | 11,6/42,5 | 5,3/6,7 | 1,9/1,8 | 185 |
| K200L-4/2 | 8/30 | 1465/2930 | 89,8/88,0 | 0,86/0,88 | 14,6/55,9 | 6,0/6,8 | 1,8/2,0 | 232 |
| K225S-4/2 | 10/37 | 1465/2950 | 89,9/89,4 | 0,86/0,89 | 17,7/67,1 | 6,5/7,2 | 1,9/2,0 | 287 |
| K225M-4/2 | 12/45 | 1470/2950 | 91,2/89,5 | 0,85/0,89 | 22,3/81,5 | 7,0/7,8 | 2,0/2,1 | 322 |
| K250M-4/2 | 15/55 | 1470/2960 | 91,5/89,8 | 0,86/0,90 | 27,5/98,2 | 6,5/7,0 | 1,9/2,1 | 381 |
| K280S-4/2 | 20/75 | 1475/2970 | 91,8/90,0 | 0,86/0,89 | 36,6/135 | 7,0/7,5 | 1,9/2,2 | 510 |
| K280M-4/2 | 24/90 | 1475/2970 | 92,2/90,5 | 0,85/0,90 | 44,2/159 | 7,0/7,6 | 2,0/2,2 | 600 |
| K315S-4/2 | 27/110 | 1480/2975 | 94,0/93,0 | 0,83/0,90 | 53,7/190 | 5,8/7,0 | 1,8/2,0 | 970 |
| K315M-4/2 | 33/132 | 1485/2970 | 94,3/93,6 | 0,78/0,90 | 68,7/226 | 5,1/6,8 | 1,8/1,9 | 1.080 |
| K315L-4/2 | 40/145 | 1480/2975 | 94,8/94,0 | 0,83/0,89 | 73,4/250 | 5,5/7,2 | 1,8/1,9 | 1.170 |
| K315LX-4/2 | 50/180 | 1480/2975 | 95,0/94,5 | 0,84/0,90 | 90,4/305 | 6,5/7,3 | 1,8/1,9 | 1.210 |

# K-series

Three-phase motors with squirrel cage, protection degree IP55

**8 / 4 POLES-750 / 1.500 Rpm**
**CONSTANT TORQUE**
**DAHLANDER WINDING [Δ / YY]**
380-420 V 50 Hz
Insulation class F

| TYPE | Power | Speed | Efficiency | Power factor | Rated current (400V) | Starting current ratio | Starting torque ratio | Net weight |
|---|---|---|---|---|---|---|---|---|
| | KW | Rpm | % | συνφ | Amp | Ip/In | Mp/Mn | Kg |
| K80-8/4 | 0,18/0,3 | 685/1405 | 42,0/67,7 | 0,60/0,82 | 1,02/0,78 | 2,6/4,8 | 2,4/2,3 | 17 |
| K80-8/4 | 0,25/0,4 | 690/1390 | 51,1/71,4 | 0,62/0,85 | 1,11/0,94 | 2,6/4,2 | 1,6/1,7 | 19 |
| K90S-8/4 | 0,35/0,55 | 690/1425 | 46,8/73,1 | 0,62/0,83 | 1,71/1,30 | 2,9/5,2 | 2,1/1,9 | 23 |
| K90L-8/4 | 0,44/0,75 | 700/1405 | 57,1/73,6 | 0,58/0,87 | 1,90/1,69 | 3,2/4,9 | 2,2/1,9 | 25 |
| K100L-8/4 | 0,7/1,1 | 705/1425 | 53,9/71,7 | 0,60/0,85 | 3,11/2,61 | 3,5/5,7 | 2,3/2,2 | 33 |
| K100L-8/4 | 1/1,5 | 705/1415 | 84,9/56,9 | 0,63/0,43 | 3,37/3,26 | 3,9/5,7 | 1,9/1,8 | 37 |
| K112M-8/4 | 1,4/2,2 | 700/1405 | 62,5/77,3 | 0,66/0,91 | 4,90/4,5 | 3,8/5,6 | 1,5/1,2 | 39 |
| K132S-8/4 | 2,2/3,3 | 725/1455 | 73,4/82,9 | 0,65/0,89 | 6,65/6,4 | 5,3/7,3 | 1,4/1,6 | 71 |
| K132M-8/4 | 2,6/4,2 | 725/1455 | 76,1/84,2 | 0,67/0,91 | 7,41/7,9 | 5,9/7,8 | 1,4/1,4 | 75 |
| K160M-8/4 | 4,5/6,5 | 720/1440 | 80,0/85,1 | 0,73/0,91 | 12,3/14,5 | 5,3/6,2 | 1,4/1,5 | 108 |
| K160L-8/4 | 6,5/9 | 715/1430 | 82,5/85,3 | 0,73/0,92 | 16,7/20,2 | 5,2/6,3 | 1,4/1,5 | 131 |
| K180L-8/4 | 10/16 | 735/1475 | 86,1/89,2 | 0,66/0,90 | 25,5/28,8 | 6,4/8,5 | 2,4/1,9 | 171 |
| K200L-8/4 | 14/22 | 720/1460 | 87,0/88,5 | 0,72/0,89 | 34,6/38,5 | 5,5/7,2 | 1,7/1,8 | 216 |
| K225M-8/4 | 22/30 | 735/1475 | 90,8/90,3 | 0,79/0,92 | 44,5/52,2 | 5,2/7,2 | 1,8/2,1 | 292 |
| K250M-8/4 | 28/38 | 730/1475 | 91,1/91,3 | 0,84/0,94 | 52,9/63,8 | 5,8/7,8 | 1,8/2,0 | 408 |
| K280S-8/4 | 35/50 | 735/1475 | 90,9/90,2 | 0,81/0,92 | 68,5/86,7 | 5,8/7,5 | 1,8/2,0 | 465 |
| K280M-8/4 | 45/60 | 735/1475 | 90,7/90,3 | 0,84/0,95 | 85,3/101 | 5,7/8,0 | 1,8/2,1 | 540 |
| K315S-8/4 | 55/80 | 740/1485 | 92,0/91,5 | 0,81/0,90 | 107/140 | 6,5/7,8 | 1,9/2,1 | 940 |
| K315M-8/4 | 70/100 | 740/1485 | 91,5/91,7 | 0,80/0,91 | 148/173 | 6,8/7,5 | 2,0/2,3 | 1.110 |
| K315L-8/4 | 80/115 | 740/1485 | 92,5/92,0 | 0,80/0,90 | 156/200 | 6,8/7,4 | 2,0/2,3 | 1.175 |
| K315L-8/4 | 100/140 | 740/1485 | 93,0/92,4 | 0,80/0,90 | 194/243 | 6,9/7,2 | 2,1/2,2 | 1.200 |

# K-series

Three-phase motors with squirrel cage, protection degree IP55

**8 / 4 POLES-750 / 1.500 Rpm**
**VARIABLE TORQUE**
**DAHLANDER WINDING [Y / YY]**
380-420 V 50 Hz
Insulation class F

| TYPE | Power | Speed | Efficiency | Power factor | Rated current (400V) | Starting current ratio | Starting torque ratio | Net weight |
|---|---|---|---|---|---|---|---|---|
| | KW | Rpm | % | συνφ | Amp | Ip/In | Mp/Mn | Kg |
| K80-8/4 | 0,12/0,6 | 695/1410 | 41,5/65,2 | 0,53/0,76 | 0,75/1,72 | 2,3/4,5 | 2,8/2,4 | 17 |
| K90S-8/4 | 0,3/1,3 | 705/1395 | 60,5/67,0 | 0,58/0,82 | 1,21/3,63 | 3,0/4,8 | 2,0/1,9 | 23 |
| K100L-8/4 | 0,5/2 | 690/1420 | 59,6/73,2 | 0,65/0,80 | 2,18/5,34 | 2,8/5,4 | 1,3/2,3 | 34 |
| K112M-8/4 | 1/4 | 695/1435 | 65,0/79,5 | 0,60/0,79 | 3,70/9,2 | 3,5/7,0 | 1,7/2,2 | 47 |
| K132S-8/4 | 1,2/5 | 740/1445 | 82,2/83,7 | 0,68/0,84 | 3,09/10,2 | 4,6/7,1 | 1,7/2,0 | 65 |
| K132M-8/4 | 1,8/6,5 | 725/1460 | 76,0/84,3 | 0,60/0,80 | 5,62/13,9 | 4,2/8,5 | 1,7/2,3 | 73 |
| K160M-8/4 | 2,5/10 | 730/1450 | 83,0/83,2 | 0,66/0,86 | 6,60/20,2 | 6,1/8,3 | 2,2/2,6 | 106 |
| K160L-8/4 | 3,5/12,5 | 730/1455 | 84,3/86,5 | 0,72/0,89 | 8,30/23,4 | 6,1/9,5 | 2,0/3,3 | 128 |
| K180M-8/4 | 4/16 | 730/1470 | 85,5/89,5 | 0,69/0,86 | 11,0/29,9 | 4,0/8,1 | 1,4/2,1 | 170 |
| K180L-8/4 | 5/20 | 725/1465 | 84,8/88,7 | 0,66/0,86 | 12,9/37,7 | 3,8/7,6 | 1,4/2,1 | 185 |
| K200L-8/4 | 7/26 | 730/1475 | 87,4/90,4 | 0,68/0,87 | 17,4/47,5 | 4,1/8,6 | 1,6/2,7 | 239 |
| K225S-8/4 | 9/35 | 735/1480 | 86,8/90,7 | 0,65/0,88 | 24,2/62,9 | 4,7/7,8 | 1,6/1,9 | 312 |
| K225M-8/4 | 11/45 | 740/1480 | 88,3/91,7 | 0,67/0,89 | 29,3/79,6 | 4,4/7,5 | 1,5/2,0 | 330 |
| K250M-8/4 | 14/50 | 735/1480 | 89,1/92,3 | 0,68/0,89 | 33,5/88,3 | 4,9/7,7 | 1,7/2,2 | 385 |
| K280S-8/4 | 14/66 | 740/1480 | 87,0/90,5 | 0,67/0,86 | 44,6/117 | 5,5/7,7 | 2,0/2,3 | 465 |
| K280M-8/4 | 20/78 | 740/1480 | 90,0/90,8 | 0,68/0,87 | 49,5/146 | 5,8/7,7 | 1,9/2,4 | 540 |
| K315S-8/4 | 22/95 | 740/1485 | 90,9/91,5 | 0,70/0,88 | 54,4/170 | 6,5/7,8 | 1,9/2,4 | 921 |
| K315M-8/4 | 26/110 | 740/1485 | 91,0/91,7 | 0,70/0,88 | 63,4/197 | 6,8/7,5 | 2,0/2,3 | 1.002 |
| K315L-8/4 | 30/130 | 740/1485 | 91,5/92,0 | 0,71/0,89 | 77,8/238 | 6,8/7,4 | 2,0/2,3 | 1.070 |
| K315L-8/4 | 38/160 | 740/1485 | 91,4/92,4 | 0,70/0,88 | 94,8/284 | 6,9/7,2 | 2,1/2,4 | 1.181 |

# K-series

Three-phase motors with squirrel cage, protection degree IP55

**6 / 4 POLES-1.000 / 1.500 Rpm**
**CONSTANT TORQUE**
**TWO SEPARATE WINDINGS**
380-420 V 50 Hz
Insulation class F

| TYPE | Power | Speed | Efficiency | Power factor | Rated current (400V) | Starting current ratio | Starting torque ratio | Net weight |
|---|---|---|---|---|---|---|---|---|
| | KW | Rpm | % | συνφ | Amp | Ip/In | Mp/Mn | Kg |
| K80-6/4 | 0,2/0,28 | 920/1420 | 45,0/51,0 | 0,64/0,63 | 1,00/1,26 | 3,3/4,0 | 1,8/1,6 | 17 |
| K80-6/4 | 0,25/0,37 | 930/1420 | 53,0/62,0 | 0,66/0,63 | 1,03/1,48 | 3,0/4,5 | 1,8/1,8 | 19 |
| K90S-6/4 | 0,35/0,6 | 935/1430 | 64,0/70,0 | 0,72/0,76 | 1,10/1,63 | 3,5/5,0 | 1,8/1,7 | 23 |
| K90L-6/4 | 0,5/0,9 | 940/1430 | 63,0/70,0 | 0,75/0,77 | 1,53/2,41 | 3,5/5,2 | 1,9/2,0 | 25 |
| K100L-6/4 | 0,8/1,2 | 950/1435 | 73,5/75,0 | 0,76/0,80 | 2,07/2,89 | 3,9/5,5 | 2,0/1,9 | 34 |
| K100LX-6/4 | 1/1,5 | 950/1435 | 74,0/75,0 | 0,74/0,81 | 2,64/3,80 | 4,2/5,5 | 1,9/2,0 | 38 |
| K112M-6/4 | 1,5/2,2 | 950/1435 | 72,5/74,5 | 0,82/0,84 | 3,88/5,5 | 5,0/6,0 | 1,8/1,7 | 44 |
| K132S-6/4 | 2/3,1 | 955/1440 | 73,5/74,5 | 0,84/0,85 | 4,68/7,1 | 5,5/6,0 | 1,7/1,9 | 61 |
| K132M-6/4 | 3/4,3 | 955/1445 | 74,0/77,0 | 0,85/0,87 | 6,43/9,3 | 6,0/6,5 | 1,8/2,0 | 73 |
| K160M-6/4 | 4,5/6,5 | 965/1450 | 77,5/80,0 | 0,83/0,90 | 10,1/13,8 | 6,8/7,0 | 1,7/1,8 | 113 |
| K160L-6/4 | 6,5/9,5 | 965/1450 | 81,0/81,5 | 0,85/0,91 | 13,6/18,5 | 6,5/7,0 | 2,0/1,8 | 133 |
| K180L-6/4 | 10/15 | 970/1455 | 83,5/83,0 | 0,87/0,90 | 18,9/27,1 | 6,7/7,0 | 1,7/1,8 | 181 |
| K200L-6/4 | 13/19 | 970/1460 | 86,0/85,5 | 0,89/0,89 | 25,5/30,3 | 6,5/6,8 | 2,0/2,0 | 216 |
| K200LX-6/4 | 15/20 | 970/1460 | 86,5/86,0 | 0,88/0,90 | 28,4/33,6 | 7,0/7,2 | 2,0/2,1 | 225 |
| K225M-6/4 | 20/30 | 975/1465 | 89,0/89,0 | 0,90/0,92 | 36,0/45,8 | 7,0/7,1 | 2,0/1,9 | 292 |
| K250M-6/4 | 25/35 | 980/1470 | 89,0/89,5 | 0,88/0,90 | 46,1/62,7 | 7,1/7,0 | 2,2/2,0 | 408 |
| K280S-6/4 | 30/40 | 980/1480 | 89,5/90,0 | 0,88/0,89 | 55,0/72,1 | 7,2/7,4 | 2,2/2,0 | 465 |
| K280M-6/4 | 37/45 | 980/1480 | 89,0/89,5 | 0,89/0,90 | 67,4/80,6 | 7,1/7,5 | 2,3/2,1 | 540 |
| K315S-6/4 | 55/63 | 985/1485 | 90,5/90,0 | 0,87/0,89 | 101/114 | 7,2/7,2 | 2,1/1,8 | 861 |
| K315M-6/4 | 65/80 | 990/1485 | 91,0/91,5 | 0,88/0,88 | 117/143 | 7,3/7,5 | 1,9/1,9 | 940 |
| K315L-6/4 | 80/100 | 990/1485 | 91,5/91,0 | 0,87/0,89 | 145/178 | 7,1/7,6 | 2,0/2,8 | 1.110 |
| K315LX-6/4 | 100/140 | 990/1485 | 91,5/91,0 | 0,88/0,88 | 179/252 | 7,0/7,6 | 2,0/1,9 | 1.175 |

# K-series

Three-phase motors with squirrel cage, protection degree IP55

**6 / 4 POLES-1.000 / 1.500 Rpm**
**VARIABLE TORQUE**
**TWO SEPARATE WINDINGS**
380-420 V 50 Hz
Insulation class F

| TYPE | Power | Speed | Efficiency | Power factor | Rated current (400V) | Starting curren ratio | Starting torque ratio | Net weight |
|---|---|---|---|---|---|---|---|---|
| | KW | Rpm | % | συνφ | Amp | Ip/In | Mp/Mn | Kg |
| K80-6/4 | 0,2/0,5 | 965/1420 | 49,9/64,2 | 0,54/0,79 | 1,02/1,69 | 3,8/4,6 | 3,2/2,3 | 17 |
| K90S-6/4 | 0,3/0,75 | 965/1435 | 59,5/61,6 | 0,61/0,74 | 1,36/3,13 | 3,9/5,2 | 2,1/2,1 | 23 |
| K90L-6/4 | 0,4/1,1 | 935/1420 | 61,0/65,0 | 0,65/0,72 | 1,46/3,4 | 4,5/6,0 | 2,1/1,9 | 25 |
| K100L-6/4 | 0,5/1,5 | 965/1435 | 70,5/79,5 | 0,66/0,86 | 2,29/3,5 | 4,5/6,8 | 2,2/2,0 | 34 |
| K100LX-6/4 | 0,8/2,4 | 960/1420 | 70,8/78,3 | 0,70/0,87 | 2,31/5,04 | 4,5/6,0 | 2,0/2,1 | 38 |
| K112M-6/4 | 1/3 | 965/1460 | 74,6/77,9 | 0,67/0,71 | 2,88/7,8 | 4,8/7,0 | 2,1/2,5 | 44 |
| K132S-6/4 | 1,3/4,2 | 975/1460 | 79,3/82,7 | 0,66/0,81 | 4,07/9,7 | 5,9/6,5 | 2,0/1,9 | 61 |
| K132M-6/4 | 1,5/5,5 | 975/1455 | 79,2/84,5 | 0,70/0,86 | 5,66/11,8 | 6,4/6,5 | 2,0/1,9 | 73 |
| K160M-6/4 | 3/9 | 975/1465 | 82,7/86,0 | 0,68/0,79 | 8,40/21,1 | 6,7/7,7 | 2,4/2,1 | 113 |
| K160L-6/4 | 3,5/12 | 980/1460 | 84,7/87,8 | 0,69/0,84 | 10,8/25,3 | 7,3/7,5 | 2,7/2,0 | 133 |
| K180M-6/4 | 5/14 | 985/1475 | 82,2/89,2 | 0,68/0,85 | 13,9/30,5 | 6,6/7,9 | 2,5/2,2 | 181 |
| K180L-6/4 | 6,5/18 | 985/1470 | 85,0/89,7 | 0,73/0,86 | 15,4/37,2 | 6,9/7,5 | 2,7/2,0 | 190 |
| K200L-6/4 | 9/26 | 980/1475 | 86,6/90,4 | 0,79/0,87 | 19,0/47,7 | 6,2/7,8 | 2,2/2,2 | 232 |
| K225S-6/4 | 10/31 | 985/1480 | 88,0/90,6 | 0,78/0,89 | 25,1/61,0 | 7,8/7,1 | 2,1/1,8 | 287 |
| K225M-6/4 | 13/38 | 990/1475 | 88,0/90,3 | 0,77/0,89 | 29,8/71,8 | 7,7/7,3 | 2,8/2,0 | 322 |
| K250M-6/4 | 17/48 | 990/1475 | 88,6/92,2 | 0,88/0,94 | 33,3/83,6 | 8,8/7,1 | 2,3/2,3 | 408 |
| K280S-6/4 | 23/65 | 980/1475 | 86,0/91,4 | 0,87/0,89 | 44,4/121 | 7,5/7,0 | 2,1/1,9 | 465 |
| K280M-6/4 | 27/80 | 985/1480 | 87,5/92,7 | 0,85/0,87 | 54,3/143 | 7,4/7,5 | 2,1/2,0 | 540 |
| K315S-6/4 | 32/95 | 985/1480 | 87,8/93,1 | 0,81/0,88 | 69,0/167 | 7,0/7,2 | 2,0/1,8 | 1.002 |
| K315M-6/4 | 37/115 | 985/1485 | 88,2/93,6 | 0,80/0,90 | 81,8/197 | 6,5/6,8 | 2,0/1,9 | 1.070 |
| K315L-6/4 | 45/125 | 990/1485 | 88,9/93,8 | 0,89/0,80 | 91,3/216 | 6,8/7,0 | 1,9/1,8 | 1.181 |
| K315LX-6/4 | 55/145 | 990/1485 | 90,9/94,0 | 0,81/0,89 | 108/250 | 6,9/7,1 | 2,0/1,8 | 1.250 |

# K-series

Three-phase motors with squirrel cage, protection degree IP55

**8 / 6 POLES-750 / 1.000 Rpm**
**CONSTANT TORQUE**
**TWO SEPARATE WINDINGS**
380-420 V 50 Hz
Insulation class F

| TYPE | Power | Speed | Efficiency | Power factor | Rated current (400V) | Starting current ratio | Starting torque ratio | Net weight |
|---|---|---|---|---|---|---|---|---|
| | KW | Rpm | % | συνφ | Amp | Ip/In | Mp/Mn | Kg |
| K90S-8/6 | 0,3/0,4 | 695/945 | 62 /68 | 0,61 /0,71 | 1,1 /1,2 | 2,5/4,5 | 1,4/1,6 | 25 |
| K90L-8/6 | 0,4/0,6 | 695/945 | 61,9 /70,5 | 0,61 /0,72 | 1,5 /1,7 | 2,5/4,5 | 1,6/1,8 | 26 |
| K100L-8/6 | 0,5/0,75 | 710/950 | 70,1 /75,1 | 0,66 /0,74 | 1,5 /1,9 | 3/5 | 1,5/1,7 | 38 |
| K100L-8/6 | 0,7/0,9 | 710/950 | 70,5 /75,1 | 0,67 /0,74 | 2,1 /2,3 | 3,5/5,2 | 1,6/1,7 | 40 |
| K112M-8/6 | 1/1,4 | 715/955 | 73,5 /79 | 0,68 /0,75 | 2,8 /3,4 | 3,6/6 | 1,8/2 | 50 |
| K132S-8/6 | 1,5/2 | 715/960 | 78 /83,4 | 0,71 /0,75 | 3,9 /4,6 | 3,6/7 | 1,6/2,5 | 65 |
| K132M-8/6 | 2,2/3 | 710/960 | 78 /83,4 | 0,71 /0,76 | 5,7 /6,8 | 4/7 | 1,7/2,3 | 80 |
| K160M-8/6 | 4/5,5 | 720/960 | 81 /86,5 | 0,73 /0,77 | 9,8 /11,9 | 4/6,6 | 1,7/2,8 | 120 |
| K160L-8/6 | 5,5/7,5 | 710/960 | 82,5 /86,7 | 0,73 /0,77 | 13 /16,2 | 3,8/7 | 1,9/3,2 | 145 |
| K180L-8/6 | 8/11 | 720/960 | 88,3 /90 | 0,75 /0,8 | 17 /22,1 | 4/6,5 | 2/2,5 | 185 |
| K200L-8/6 | 14/19 | 720/960 | 90,1 /92 | 0,76 /0,81 | 29 /36,9 | 4,5/6,5 | 2,2/2,4 | 250 |
| K225S-8/6 | 17/20 | 720/960 | 91,3 /92,5 | 0,78 /0,83 | 34 /37,7 | 4,5/6,5 | 2,4/2,5 | 266 |
| K225M-8/6 | 20/27 | 725/965 | 91,2 /91 | 0,78 /0,83 | 40 /51,8 | 4,5/6,5 | 2,1/2,3 | 300 |
| K250M-8/6 | 24/32 | 725/965 | 91,5 /93,5 | 0,79 /0,86 | 48 /57,6 | 5/7,5 | 2,4/2,5 | 410 |
| K280S-8/6 | 30/40 | 730/970 | 92 /93 | 0,79 /0,86 | 59 /72,4 | 6/7,5 | 2,4/2,5 | 530 |
| K280M-8/6 | 40/50 | 735/970 | 92,3 /93 | 0,79 /0,86 | 79 /90,6 | 6,/7,2 | 2,2/2,4 | 600 |
| K315S-8/6 | 50/60 | 735/980 | 94 /94 | 0,82 /0,86 | 94 /107,5 | 5,5/7,5 | 2/2,1 | 1.000 |
| K315M-8/6 | 60/80 | 730/980 | 94 /94 | 0,82 /0,86 | 112 /143,4 | 5/6,5 | 1,2/1,5 | 1.100 |
| K315M-8/6 | 70/90 | 730/980 | 94 /94 | 0,82 /0,86 | 131 /161,3 | 5/6,5 | 1,2/1,5 | 1.150 |
| K315L-8/6 | 80/100 | 735/980 | 94 /94 | 0,82 /0,86 | 150 /179,2 | 5/7 | 1,2/1,5 | 1.230 |

# K-series

Three-phase motors with squirrel cage, protection degree IP55

**8 / 6 POLES-750 / 1.000 Rpm**
**VARIABLE TORQUE**
**TWO SEPARATE WINDINGS**
380-420 V 50 Hz
Insulation class F

| TYPE | Power | Speed | Efficiency | Power factor | Rated current (400V) | Starting current ratio | Starting torque ratio | Net weight |
|---|---|---|---|---|---|---|---|---|
| | KW | Rpm | % | συνφ | Amp | Ip/In | Mp/Mn | Kg |
| K90L-8/6 | 0,3/0,75 | 695/920 | 48,4 /50,5 | 0,61 /0,73 | 1,5 /2,9 | 3/3,6 | 1,6/1,9 | 25 |
| K100L-8/6 | 0,55/1,3 | 720/950 | 50,0 /56,2 | 0,67 /0,75 | 2,4 /4,5 | 3,1/3,7 | 1,8/1,5 | 33 |
| K112M-8/6 | 0,7/1,9 | 720/950 | 52,3 /74,7 | 0,68 /0,76 | 2,9 /4,8 | 4/4,9 | 1,6/1,9 | 45 |
| K132S-8/6 | 1,1/2,5 | 720/960 | 68,4 /71,6 | 0,7 /0,76 | 3,3 /6,7 | 4/6,1 | 1,3/2 | 63 |
| K132M-8/6 | 1,5/3,8 | 720/960 | 63,1 /72,6 | 0,71 /0,76 | 4,8 /10 | 4/5,5 | 2/2,8 | 73 |
| K160M-8/6 | 2,5/6 | 720/960 | 84,2 /89,3 | 0,73 /0,77 | 5,9 /12,6 | 6,2/6,4 | 2,4/1,8 | 120 |
| K160L-8/6 | 3,5/7,5 | 720/960 | 90,1 /87,4 | 0,74 /0,77 | 7,6 /16,1 | 6/6,4 | 2/1,9 | 150 |
| K180L-8/6 | 5,5/12 | 730/960 | 73,6 /84,7 | 0,76 /0,8 | 14,2 /25,6 | 5/5,5 | 1,6/1,3 | 200 |
| K200L-8/6 | 9/20 | 730/960 | 86,0 /85,6 | 0,76 /0,81 | 20 /41,8 | 5,5/6,5 | 2,4/2,5 | 250 |
| K225S-8/6 | 11/24 | 730/970 | 86,0 /88,2 | 0,78 /0,83 | 23,7 /47,5 | 5/6,5 | 2,3/2,8 | 280 |
| K225M-8/6 | 13/27 | 730/970 | 89,6 /90,6 | 0,79 /0,83 | 26,6 /52 | 5/6,3 | 2,3/2,5 | 420 |
| K250M-8/6 | 15/35 | 730/970 | 91,9 /93,2 | 0,79 /0,85 | 29,9 /64 | 5,5/6,5 | 2,3/2,2 | 408 |
| K280S-8/6 | 22/45 | 730/970 | 94,4 /91,7 | 0,79 /0,85 | 42,7 /83,6 | 6,3/7 | 2,1/2 | 550 |
| K280M-8/6 | 25/53 | 730/970 | 94,6 /95,1 | 0,79 /0,85 | 48,4 /95 | 6,3/7 | 2,4/2,3 | 600 |
| K315S-8/6 | 33/70 | 730/980 | 95,3 /91,3 | 0,8 /0,86 | 62,7 /129,2 | 6,2/6,9 | 1,7/1,5 | 990 |
| K315M-8/6 | 40/80 | 730/980 | 91,8 /88,6 | 0,81 /0,86 | 78 /152 | 6,2/6,9 | 1,7/1,5 | 1.080 |
| K315M-8/6 | 45/100 | 735/980 | 94,1 /95,3 | 0,81 /0,86 | 86 /176,7 | 6,3/6,7 | 1,7/1,5 | 1.100 |
| K315L-8/6 | 55/120 | 740/985 | 93,0 /92,5 | 0,82 /0,86 | 105 /218,5 | 6,5/7 | 1,7/1,5 | 1.200 |

# K-series

Dimension sheet

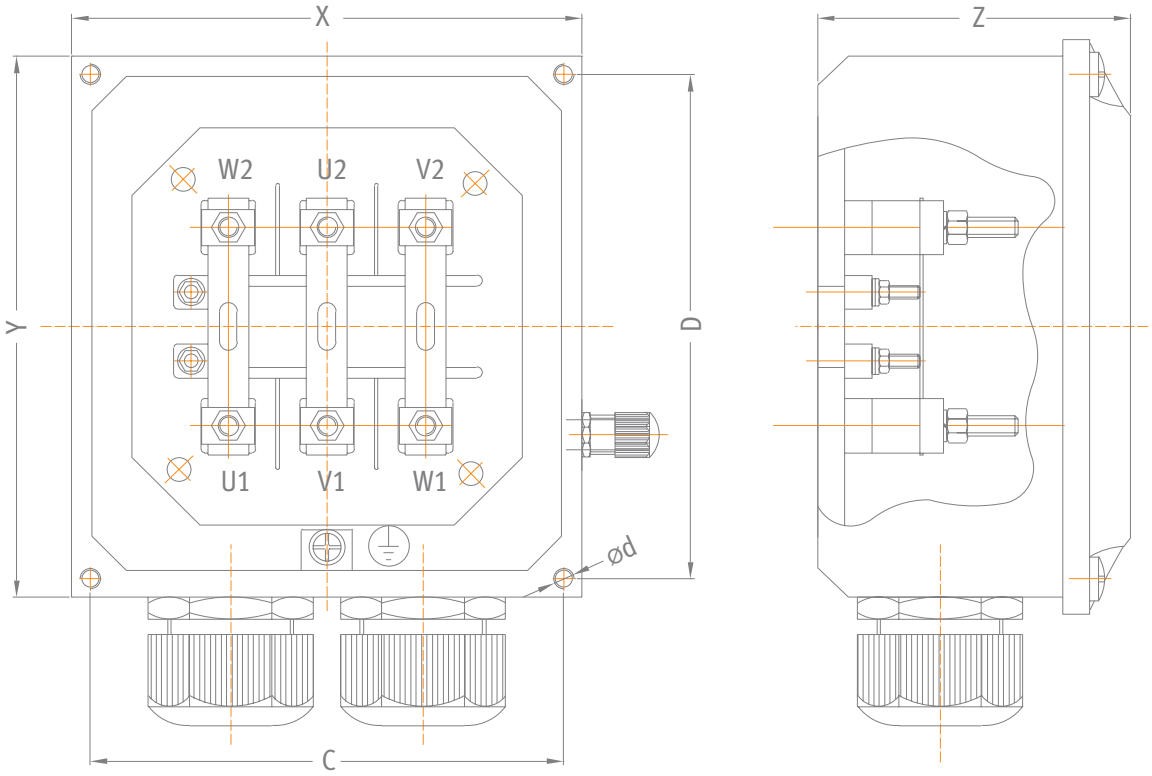


## TERMINAL BOX DIMENSIONS FOR K SERIES

SIZE 80-355

| TYPE | X | Y | Z | C | D | d |
|---|---|---|---|---|---|---|
| K80 | 103 | 103 | 64 | 78 | 78 | M5 |
| K90<br>K100 | 110 | 110 | 71 | 86 | 86 | M5 |
| K112<br>K132 | 118 | 126 | 79 | 94 | 102 | M5 |
| K160<br>K180 | 160 | 170 | 91 | 134 | 144 | M6 |
| K200<br>K225 | 187 | 208 | 102 | 165 | 185 | M8 |
| K250<br>K280 | 217 | 246 | 115 | 193 | 222 | M8 |
| K315 | 330 | 380 | 222 | 290 | 342 | M12 |
| K355 | 348 | 477 | 285 | 60 | 158/158 | M8 |

# K-series
Dimension sheet

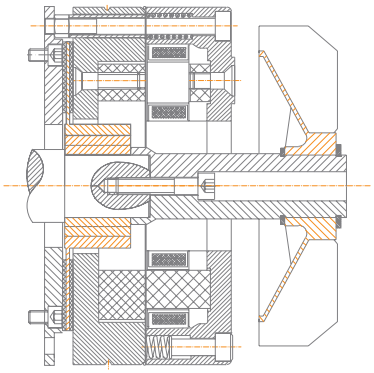

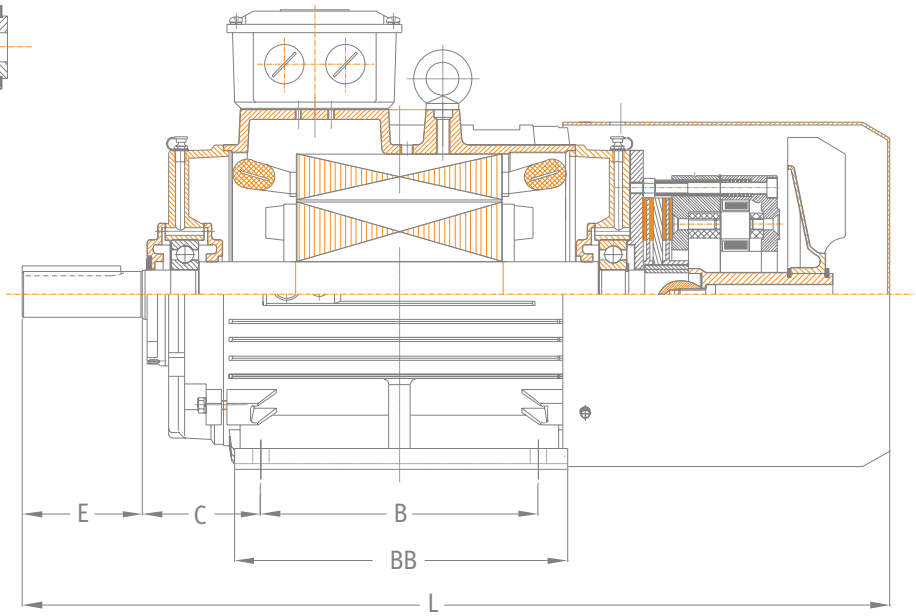


## BRAKE KITS FOR K (or AK) SERIES
SIZE 80-250

| TYPE | L | BRAKE TYPE | Braking Torqe (N.m.) |
|---|---|---|---|
| K80 | 364 | AC4 with kit | 20 |
| K90S/L | 417\442 | AC5 with kit | 40 |
| K100 | 480 | AC6 with kit | 60 |
| K112 | 510 | AC7 with kit | 90 |
| K132S/M | 580\618 | AC8 Z20 with kit | 200 |
| K160M/L | 750/794 | AC8D | 400 |
| K180M/L | 864/902 | T180D | 500 |
| K200L | 997 | T200D | 600 |
| K225S/M-2/M4-8 | 1052/1047/1077 | T200D | 600 |
| K250M | 1117 | K10 | 500-800 |

# K-series

Dimension sheet

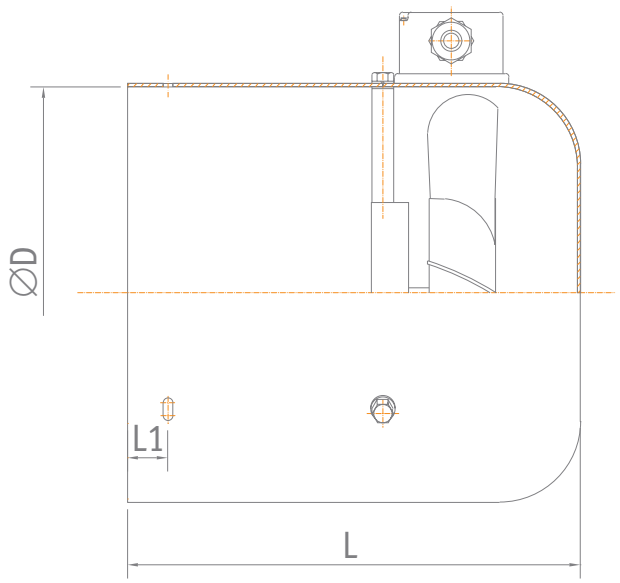


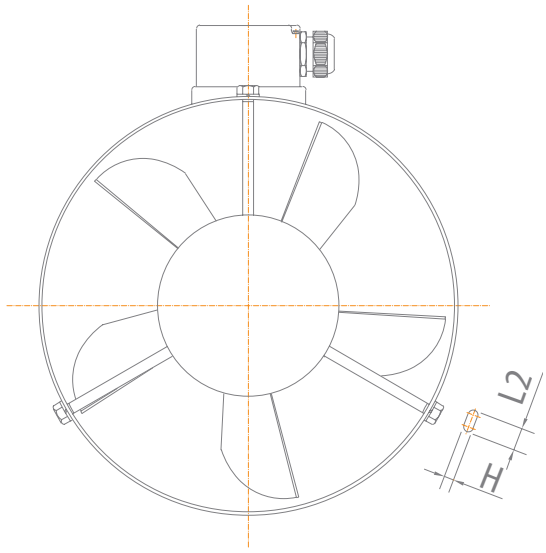


## FORCED COOLING KIT FOR K (or AK) SERIES

SIZE 80 - 132

| TYPE | L | L1 | L2 | H | D |
|---|---|---|---|---|---|
| K-80 | 168 | 15 | 38 | 7 | 153 |
| K-90 | 198 | 10 | 10 | 6 | 173 |
| K-100 | 198 | 15 | 10 | 6 | 193 |
| K-112 | 210 | 21 | 10 | 6 | 217 |
| K-132 | 235 | 22 | 10 | 6 | 256 |

# K-series

Dimension sheet

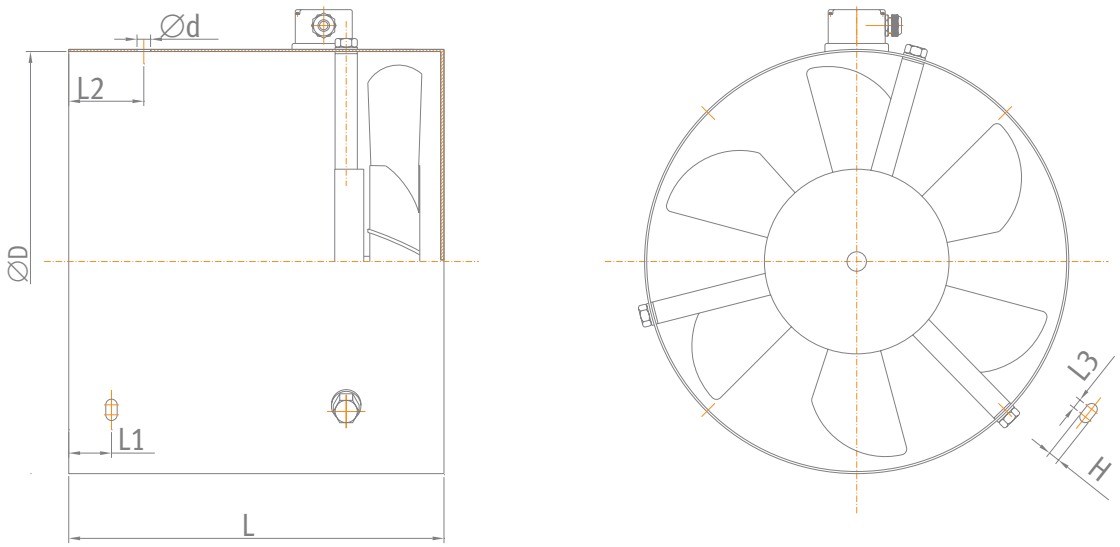


## FORCED COOLING KIT FOR K SERIES

SIZE 160 - 355

| TYPE | L | L1 | L2 | L3 | D | d | H |
|---|---|---|---|---|---|---|---|
| K-160 | 280 | 20 | 38 | 12 | 311 | 20 | 7 |
| K-180 | 335 | 40 | 67.5 | 14 | 352 | 20 | 8 |
| K-200 | 372 | 40 | 66 | 14 | 394 | 30 | 8 |
| K-225 | 395 | 45 | 71.5 | 18 | 442 | 30 | 10 |
| K-250 | 423 | 55 | 81.5 | 18 | 481 | 30 | 10 |
| K-280 | 500 | 69 | 91.5 | 18 | 543 | 30 | 10 |
| K-315 | 595 | 75 | 150 | 25 | 619 | 30 | 12 |
| K-355 | 587 | 101 | 127 | 13 | 698 | 19 | 12 |

# K-series

Dimension sheet

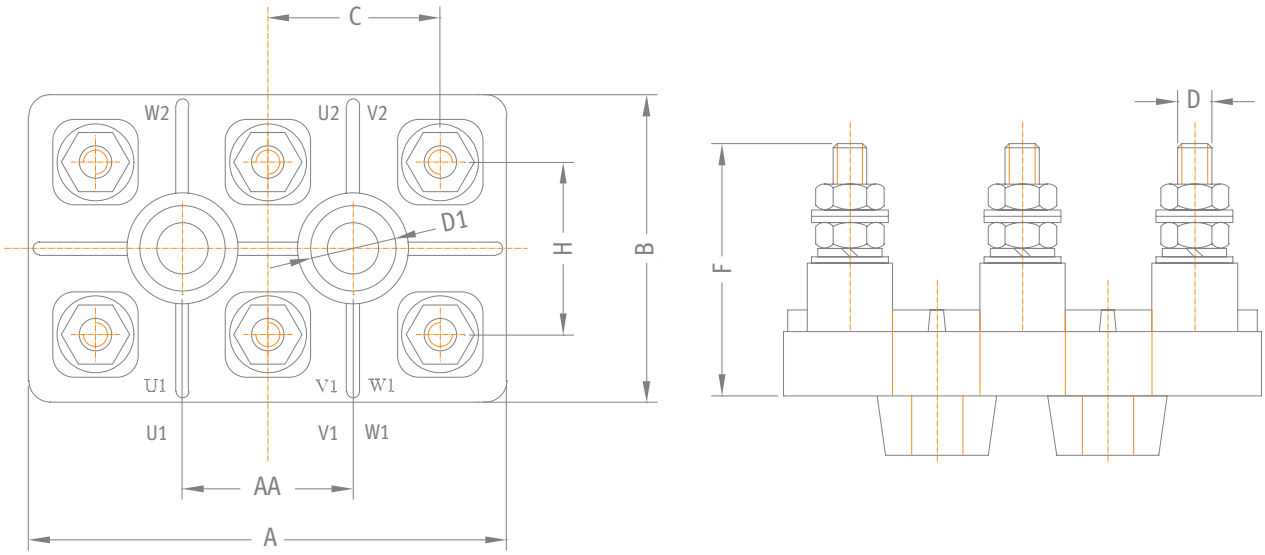


## TERMINAL PLATE

SIZE 80-335

| a/a | MOTOR TYPE | A | AA | H | B | C | F | D | D1 |
|---|---|---|---|---|---|---|---|---|---|
| 1 | **80** | 56 | 20 | 19 | 36 | 20 | 31 | M4 | 10 |
| 2 | **90-100** | 58 | 24 | 22 | 35 | 22 | 25 | M4 | 12 |
| 3 | **112-132** | 66 | 24 | 24 | 40 | 24 | 31 | M5 | 12 |
| 4 | **160-180** | 93 | 30 | 30 | 57 | 30 | 36 | M6 | 12 |
| 5 | **200-225** | 114 | 38 | 38 | 68 | 38 | 44 | M8 | 16 |
| 6 | **250-280** | 131 | 43 | 42 | 87 | 42 | 61 | M10 | 16 |
| 7 | **315** | 172 | 56 | 54 | 119 | 54 | 80 | M12 | 18 |
| 8 | **355** | 240 | 80 | 96 | 172 | 79 | 100 | M16 | 25 |

# K-series

Dimension sheet

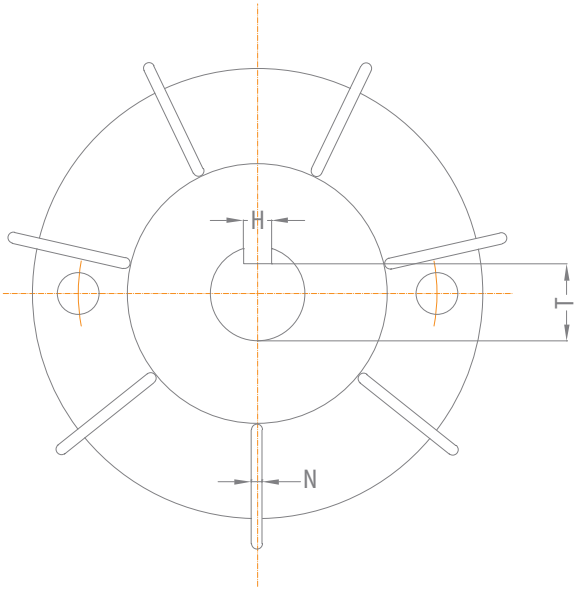


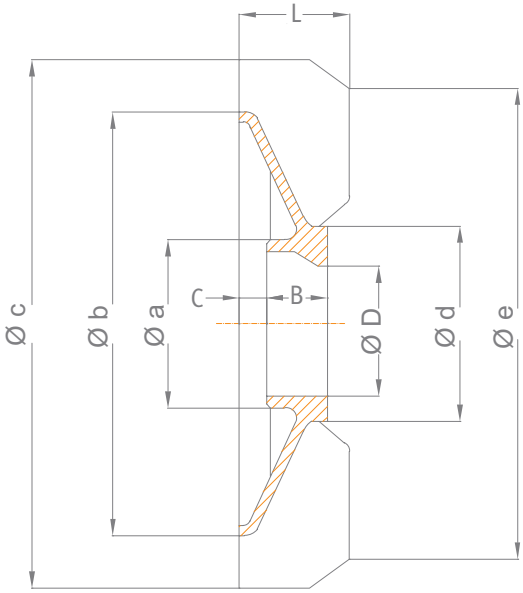


## FANS

SIZE 80-132, 280

| MOTOR TYPE | Ø D | Ø a | Ø b | Ø c | Ø d | Ø e | L | B | C | H | T | N |
|---|---|---|---|---|---|---|---|---|---|---|---|---|
| K80-2,4,6 | 19.2 | 27 | 85 | 100 | 38 | 85 | 28 | 22 | 6 | 6 | 16 | 5 |
| K90-2 | 24.2 | 32 | 110 | 135 | 50 | 115 | 35 | 27 | 6 | 8 | 20.5 | 5 |
| K90-4,6,8 | 24.2 | 32 | 130 | 155 | 50 | 136 | 40 | 27 | 6 | 8 | 20.5 | 7 |
| K100-2,4,6 | 28.2 | 36 | 130 | 155 | 54 | 136 | 40 | 27 | 6 | 8 | 24.5 | 5 |
| K112-2 | 28.2 | 36 | 130 | 155 | 54 | 136 | 40 | 30 | 6 | 8 | 24.5 | 5 |
| K112-4,6,8 | 28.2 | 36 | 150 | 185 | 54 | 160 | 45 | 30 | 6 | 8 | 24.5 | 7 |
| K132-2 | 38.2 | 48 | 150 | 185 | 66 | 160 | 47 | 35 | 12 | 10 | 33.5 | 5 |
| K132-4,6,8 | 38.2 | 48 | 165 | 200 | 66 | 175 | 50 | 35 | 12 | 10 | 33.5 | 7 |
| K280-2 | 68 | 83 | 280 | 280 | 110 | | 110 | 60 | 35 | 18 | 61.3 | 5 |
| K280-4,6,8,10 | 68 | 95 | 400 | 400 | 130 | | 130 | 65 | 35 | 20 | 61.3 | 9 |

# K-series

Dimension sheet

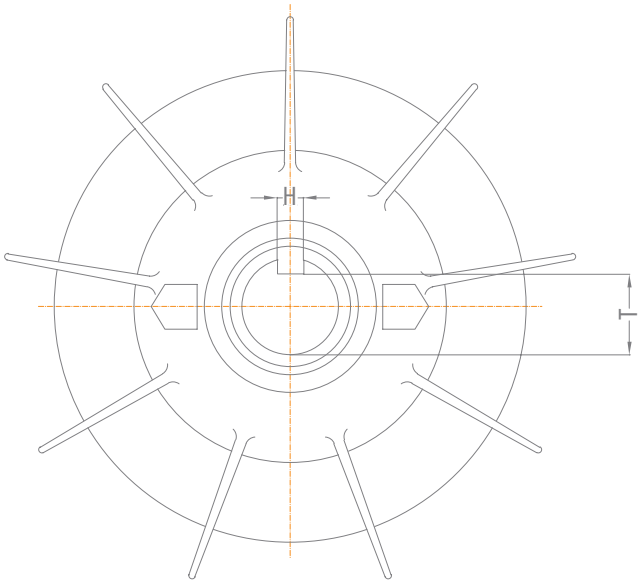


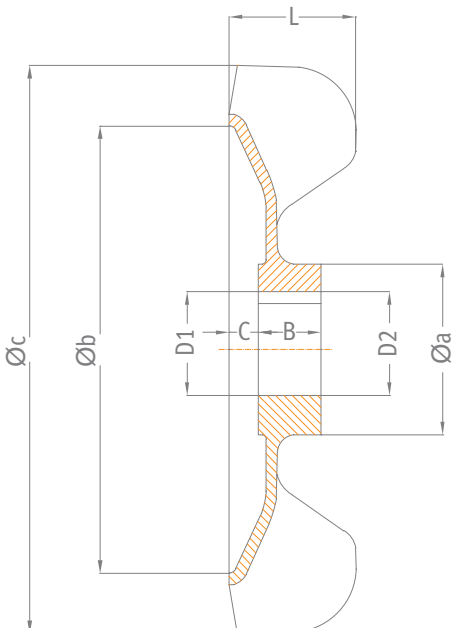


## FANS

SIZE 160-355

| MOTOR TYPE | Ø D1 | | Ø D2 | | Ø a | Ø b | Ø c | L | B | | H | | T | | C | |
|---|---|---|---|---|---|---|---|---|---|---|---|---|---|---|---|---|
| K160-2 | 43 | +0.26<br>-0.05 | 43 | +0.18<br>-0.12 | 63 | 170 | 215 | 50 | 40 | 0<br>-0.62 | 12 | +0.16<br>-0.06 | 38.3 | 0<br>-0.20 | 10 | 0<br>-0.18 |
| K160-4.6 | 43 | +0.26<br>-0.05 | 43 | +0.18<br>-0.12 | 64 | 230 | 250 | 58 | 40 | 0<br>-0.62 | 12 | +0.16<br>-0.06 | 38.3 | 0<br>-0.20 | 13 | 0<br>-0.18 |
| K180-2,4 | 52 | +0.28<br>0 | 52 | +0.05<br>-0.13 | 72 | 200 | 250 | 65 | 35 | 0<br>-0.62 | 14 | +0.16<br>-0.06 | 47 | 0<br>-0.20 | 10 | 0<br>-0.18 |
| K180-6,8 | 52 | +0.28<br>0 | 52 | +0.05<br>-0.13 | 72 | 220 | 275 | 63 | 35 | 0<br>-0.62 | 14 | +0.16<br>-0.06 | 47 | 0<br>-0.20 | 11 | 0<br>-0.18 |
| K200-2,4 | 58 | +0.28<br>0 | 58 | +0.05<br>-0.13 | 94 | 210 | 260 | 75 | 40 | 0<br>-0.62 | 16 | +0.18<br>0 | 52 | 0<br>-0.20 | 10 | 0<br>-0.18 |
| K200-6,8 | 58 | +0.28<br>0 | 58 | +0.05<br>-0.13 | 94 | 240 | 295 | 75 | 40 | 0<br>-0.62 | 16 | +0.18<br>0 | 52 | 0<br>-0.20 | 11 | 0<br>-0.18 |
| K225-2 | 62 | +0.07<br>-0.15 | 62 | +0.07<br>-0.15 | 92 | 190 | 250 | 78 | 45 | 0<br>-0.62 | 16 | +0.18<br>0 | 56 | 0<br>-0.20 | 6 | 0<br>-0.12 |
| K225-4,6,8 | 62 | +0.07<br>-0.15 | 62 | +0.07<br>-0.15 | 92 | 280 | 350 | 90 | 45 | 0<br>-0.62 | 18 | +0.18<br>0 | 55 | 0<br>-0.20 | 20 | 0<br>-2.1 |
| K250-2 | 68 | +0.30<br>0 | 68 | +0.07<br>-0.15 | 104 | 220 | 250 | 80 | 45 | 0<br>-0.62 | 18 | +0.18<br>0 | 61 | 0<br>-0.20 | 4 | 0<br>-0.12 |
| K250-4,6,8 | 68 | +0.30<br>0 | 68 | +0.07<br>-0.15 | 104 | 280 | 350 | 90 | 45 | 0<br>-0.62 | 18 | ±0.215 | 61 | 0<br>-0.20 | 22 | 0<br>-2.1 |
| K315-2 | 75 | +0.046<br>0 | 75 | +0.57<br>-0.11 | 118 | 290 | 350 | 110 | 60 | 0<br>-0.19 | 18 | +0.21<br>0 | 79.4 | +0.2<br>0 | 30 | 0<br>-0.12 |
| K315-4 | 90 | +0.11<br>-0.35 | 90 | +0.57<br>-0.11 | 125 | 420 | 420 | 150 | 80 | 0<br>-0.74 | 22 | +0.21<br>0 | 81.3 | 0<br>-0.2 | 35 | 0<br>-2.1 |
| K355-2 | 75 | +0.046<br>0 | 75 | +0.57<br>-0.11 | 118 | 290 | 350 | 110 | 70 | 0<br>-0.19 | 20 | -0.21<br>0 | 67.5 | +0.2<br>0 | 30 | 0<br>-0.12 |
| K355-4 | 90 | +0.11<br>-0.35 | 90 | +0.57<br>-0.11 | 145 | 450 | 570 | 110 | 70 | 0<br>-0.74 | 25 | +0.21<br>0 | 81.3 | 0<br>-0.2 | 10 | 0<br>-2.1 |

# K-series

Dimension sheet

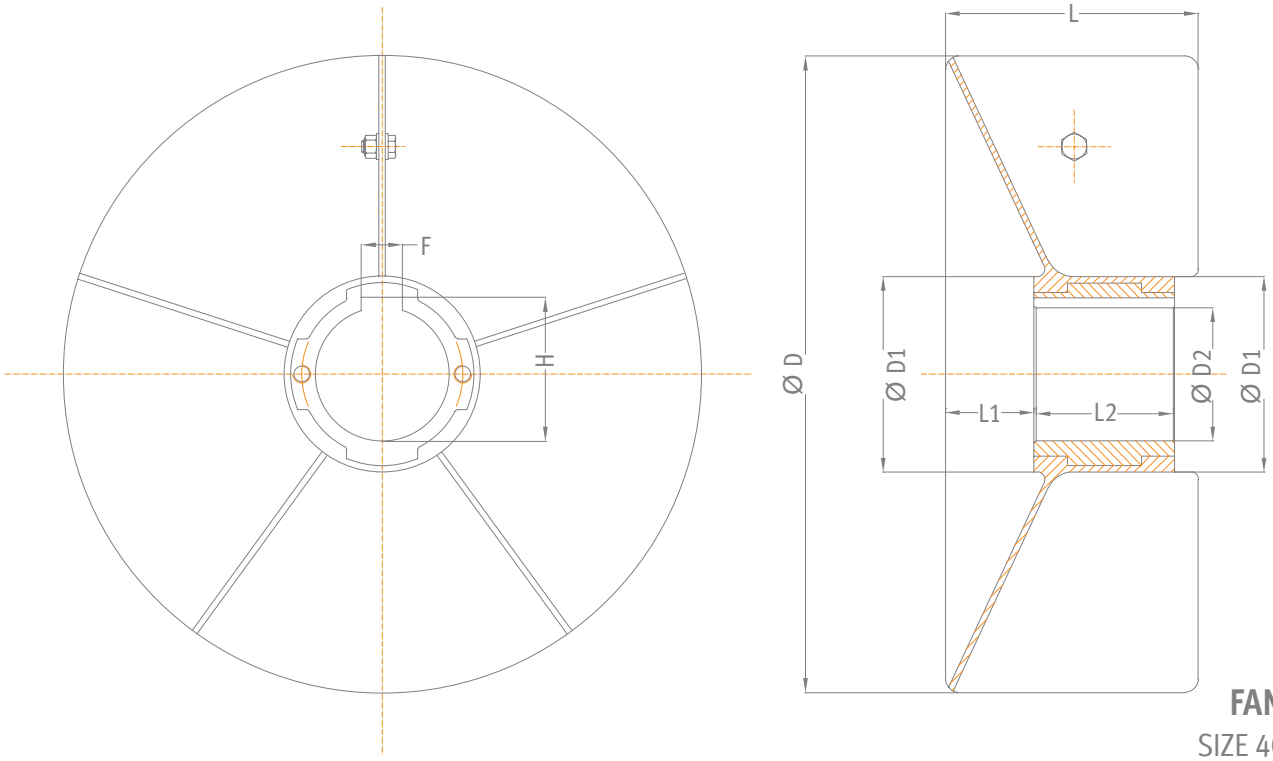


## FANS

SIZE 400

| MOTOR TYPE | Ø D | Ø D1 | Ø D2 | | F | H | | L | L1 | | L2 | |
|---|---|---|---|---|---|---|---|---|---|---|---|---|
| K400-2 | 410 | 132 | 90 | +0.054<br>0 | 25±0.026 | 96.4 | +0.2<br>0 | 171±1 | 60 | 0<br>-0.19 | 95 | 0<br>-0.22 |
| K400-4,6 | 500 | 159 | 110 | +0.054<br>0 | 28±0.026 | 116.4 | +0.2<br>0 | 233±1 | 74 | 0<br>-0.19 | 145 | 0<br>-0.22 |

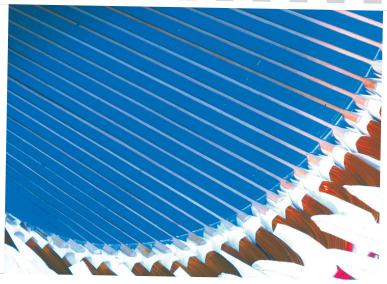
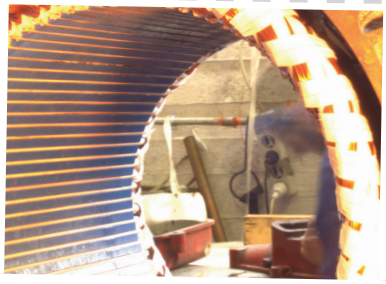
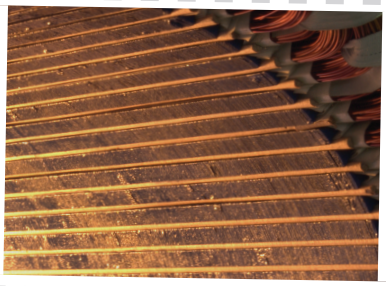
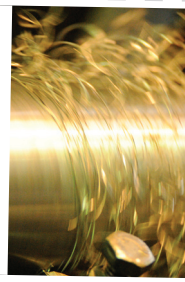

VALIADIS S.A. VALIADIS S.A. VALIADIS S.A. VALIADIS S.A.

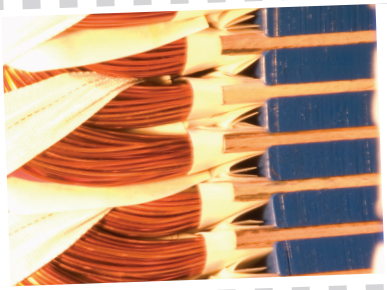

VALIADIS S.A. VALIADIS S.A. VALIADIS S.A. VALIADIS S.A.

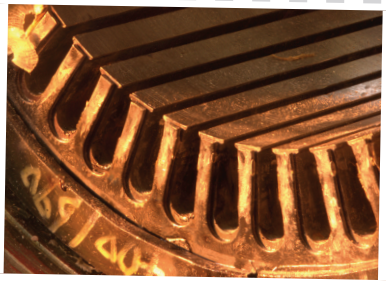
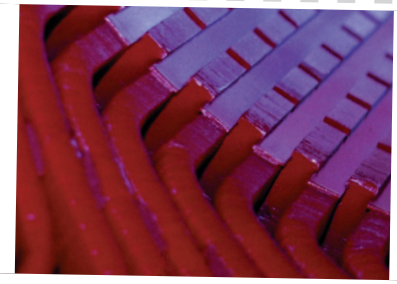

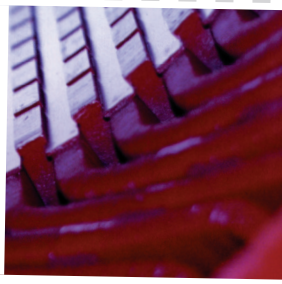

VALIADIS S.A. VALIADIS S.A. VALIADIS S.A. VALIADIS S.A. VALI

VALIADIS S.A. VALIADIS S.A. VALIADIS S.A. VALIADIS S.A.

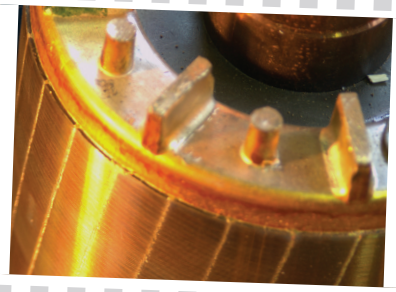

VALIADIS S.A. VALIADIS S.A. VALIADIS S.A. VALIADIS S.A. VALI

# AK series

HELLENIC
VALIAD
Tel.+30 210 2817217 10, G.LABRA
3~M
Type K802-
0.55 kW
Brgs DE 6204ZZC3
Brgs NDE 6204ZZC3
S1
885/1060

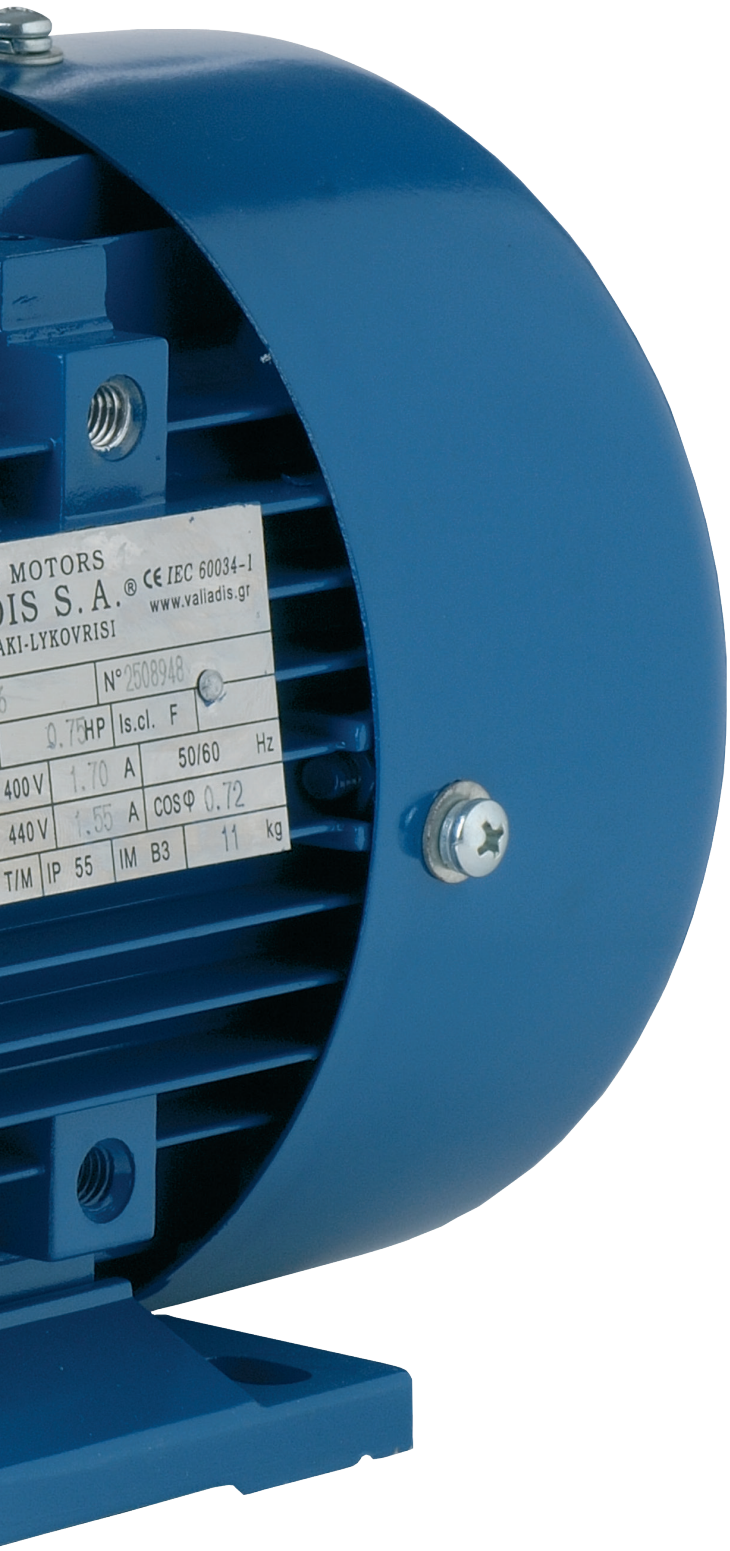


# AK-series

## Technical description
## IEC 56-132

Up to 3kW (4HP):
380-420 / 220-240 V Y/Δ 50Hz
From 4kW (5.5HP):
660-725 / 380-420 V Y/Δ 50Hz

## Applications

- Fans
- Pumps
- Gears
- Compressors
- Textiles
- Food industry

## Standard features

- Industrial series of aluminium housing motors
- IP55 protection degree
- Insulation class F, temperature rise 80°C
- Removable feet with the possibility of right and left hand side terminal box
- Terminal box rotation at 180o
- SKF or NSK bearings
- Cast iron housing for the bearing
- RAL 5010, blue colour

## Optional features

- Special voltages and frequency
- Class H insulation
- Brake kits for all motors
- Forced cooling for constant torque operation through frequency inverter
- IP56 / IP65 protection
- Cast iron flange / endshields
- PTC / PT100 in the winding
- Frame reduced motors (non-IEC)
- Anticondensation heaters
- Roller bearings on drive end
- Double shaft
- Cable execution (with terminal box or directly connected)
- Epoxy raisin encapsulated terminal box
- Epoxy raisin encapsulated winding
- Silicon encapsulated terminal box

# AK-series

Three-phase motors with squirrel cage, protection degree IP55

**2 POLES-3.000 Rpm,**
380-420/220-240 V Y/Δ 50 Hz
660-725/380-420 V Y/Δ 50 Hz
Insulation class F

| TYPE | Power | | Speed | Efficiency | Power factor | Rated current (400V) | Nominal torque | Moment of inertia GD²/4 | Starting current ratio | Starting torque ratio | Break-down torque | Net weight |
|---|---|---|---|---|---|---|---|---|---|---|---|---|
| | KW | HP | Rpm | % | συνφ | Amp | Nm | Mp/Mn | Ip/In | Mp/Mn | Mm/Mn | Kg |
| AK56-2 | 0,09 | 0,12 | 2700 | 60,3 | 0,77 | 0,28 | 0,3 | 0,00013 | 6,0 | 2,2 | 2,2 | 4,6 |
| AK56-2 | 0,12 | 0,16 | 2700 | 63,5 | 0,78 | 0,35 | 0,4 | 0,00014 | 6,0 | 2,2 | 2,2 | 4,8 |
| AK63-2 | 0,18 | 0,25 | 2720 | 65,0 | 0,80 | 0,5 | 0,6 | 0,00018 | 6,5 | 2,2 | 2,2 | 5 |
| AK63-2 | 0,25 | 0,33 | 2720 | 67,6 | 0,81 | 0,66 | 0,9 | 0,00019 | 6,5 | 2,2 | 2,2 | 5,3 |
| AK71-2 | 0,37 | 0,5 | 2720 | 70,2 | 0,81 | 0,94 | 1,3 | 0,00030 | 7,0 | 2,2 | 2,2 | 6,5 |
| AK71-2 | 0,55 | 0,75 | 2740 | 72,9 | 0,82 | 1,33 | 1,9 | 0,00035 | 7,0 | 2,2 | 2,3 | 7 |
| AK80-2 | 0,75 | 1 | 2845 | 75,0 | 0,83 | 1,74 | 2,5 | 0,00075 | 7,5 | 2,2 | 2,3 | 9,5 |
| AK80-2 | 1,1 | 1,5 | 2840 | 77,2 | 0,84 | 2,45 | 3,7 | 0,00090 | 7,9 | 2,2 | 2,3 | 11 |
| AK90S-2 | 1,5 | 2 | 2840 | 79,2 | 0,84 | 3,26 | 5,0 | 0,00240 | 7,9 | 2,2 | 2,3 | 13 |
| AK90L-2 | 2,2 | 3 | 2840 | 81,1 | 0,85 | 4,61 | 7,4 | 0,00280 | 7,9 | 2,2 | 2,3 | 16 |
| AK100L-2 | 3 | 4 | 2860 | 83,2 | 0,87 | 5,99 | 10,0 | 0,00290 | 8,1 | 2,2 | 2,3 | 22 |
| AK112M-2 | 4 | 5,5 | 2880 | 85,3 | 0,88 | 7,7 | 13,3 | 0,00550 | 8,1 | 2,2 | 2,3 | 30 |
| AK132S-2 | 5,5 | 7,5 | 2900 | 86,0 | 0,88 | 10,5 | 18,1 | 0,01090 | 8,1 | 2,2 | 2,3 | 38 |
| AK132S-2 | 7,5 | 10 | 2900 | 86,7 | 0,88 | 14,2 | 24,7 | 0,01260 | 8,1 | 2,2 | 2,3 | 42 |
| AK132M-2 | 9 | 12,5 | 2890 | 86,1 | 0,89 | 16,9 | 29,7 | 0,01350 | 7,4 | 2,6 | 3,5 | 49 |

# AK-series

Three-phase motors with squirrel cage, protection degree IP55

**4 POLES-1.500 Rpm,**
380-420/220-240 V Y/Δ 50 Hz
660-725/380-420 V Y/Δ 50 Hz
Insulation class F

| TYPE | Power | | Speed | Efficiency | Power factor | Rated current (400V) | Nominal torque | Moment of inertia GD²/4 | Starting current ratio | Starting torque ratio | Break-down torque | Net weight |
|---|---|---|---|---|---|---|---|---|---|---|---|---|
| | KW | HP | Rpm | % | συνφ | Amp | Nm | Kgm² | Ip/In | Mp/Mn | Mm/Mn | Kg |
| AK56-4 | 0,06 | 0,08 | 1305 | 51,8 | 0,62 | 0,27 | 0,4 | 0,00013 | 5,2 | 2,1 | 2,2 | 4,6 |
| AK56-4 | 0,09 | 0,12 | 1300 | 52,9 | 0,63 | 0,39 | 0,7 | 0,00014 | 5,2 | 2,1 | 2,2 | 4,8 |
| AK63-4 | 0,12 | 0,16 | 1310 | 57,3 | 0,72 | 0,42 | 0,9 | 0,00027 | 5,2 | 2,4 | 2,2 | 4,8 |
| AK63-4 | 0,18 | 0,25 | 1310 | 60,4 | 0,73 | 0,59 | 1,3 | 0,00032 | 5,2 | 2,4 | 2,2 | 5 |
| AK71-4 | 0,25 | 0,33 | 1330 | 65,1 | 0,74 | 0,75 | 1,8 | 0,00045 | 5,2 | 2,4 | 2,2 | 6,3 |
| AK71-4 | 0,37 | 0,5 | 1330 | 67,3 | 0,75 | 1,06 | 2,7 | 0,00051 | 5,2 | 2,4 | 2,2 | 7 |
| AK80-4 | 0,55 | 0,75 | 1390 | 71,1 | 0,75 | 1,49 | 3,8 | 0,00180 | 5,7 | 2,4 | 2,3 | 9,5 |
| AK80-4 | 0,75 | 1 | 1380 | 72,9 | 0,77 | 1,93 | 5,2 | 0,00210 | 6,5 | 2,3 | 2,3 | 11 |
| AK90S-4 | 1,1 | 1,5 | 1390 | 75,1 | 0,77 | 2,75 | 7,6 | 0,00210 | 6,5 | 2,3 | 2,3 | 14,5 |
| AK90L-4 | 1,5 | 2 | 1390 | 77,9 | 0,79 | 3,52 | 10,3 | 0,00270 | 6,5 | 2,3 | 2,3 | 16 |
| AK100L-4 | 2,2 | 3 | 1410 | 80,1 | 0,81 | 4,9 | 14,9 | 0,00540 | 7,5 | 2,3 | 2,3 | 23 |
| AK100L-4 | 3 | 4 | 1410 | 82,0 | 0,82 | 6,44 | 20,3 | 0,00670 | 7,5 | 2,3 | 2,3 | 27 |
| AK112M-4 | 4 | 5,5 | 1435 | 84,3 | 0,82 | 8,36 | 26,6 | 0,00950 | 7,5 | 2,3 | 2,3 | 29 |
| AK132S-4 | 5,5 | 7,5 | 1440 | 85,5 | 0,83 | 11,2 | 36,5 | 0,02140 | 7,5 | 2,3 | 2,3 | 40 |
| AK132M-4 | 7,5 | 10 | 1440 | 87,2 | 0,84 | 14,8 | 49,7 | 0,02960 | 7,5 | 2,3 | 2,3 | 50 |
| AK132M-4 | 9 | 12,5 | 1440 | 86,0 | 0,85 | 17,8 | 59,7 | 0,00350 | 7,8 | 2,6 | 3,3 | 58 |

# AK-series

Three-phase motors with squirrel cage, protection degree IP55

**6 POLES-1.000 Rpm**
380-420/220-240 V Y/Δ 50 Hz
660-725/380-420 V Y/Δ 50 Hz
Insulation class F

| TYPE | Power | | Speed | Efficiency | Power factor | rated current (400V) | Nominal torque | Moment of inertia GD²/4 | Starting current ratio | Starting torque ratio | Break-down torque | Net weight |
|---|---|---|---|---|---|---|---|---|---|---|---|---|
| | KW | HP | Rpm | % | συνφ | Amp | Nm | Kgm² | Ip/In | Mp/Mn | Mm/Mn | Kg |
| AK71-6 | 0,18 | 0,25 | 850 | 56,0 | 0,66 | 0,76 | 2,0 | 0,00065 | 4,0 | 1,9 | 2 | 6 |
| AK71-6 | 0,25 | 0,33 | 850 | 59,0 | 0,68 | 0,9 | 2,8 | 0,00074 | 4,0 | 1,9 | 2 | 6,3 |
| AK80-6 | 0,37 | 0,5 | 890 | 62,0 | 0,70 | 1,23 | 4,0 | 0,00158 | 4,7 | 1,9 | 2 | 10 |
| AK80-6 | 0,55 | 0,75 | 890 | 65,0 | 0,72 | 1,7 | 5,9 | 0,00210 | 4,7 | 1,9 | 2 | 11 |
| AK90S-6 | 0,75 | 1 | 910 | 72,7 | 0,72 | 2,07 | 7,9 | 0,00290 | 5,9 | 2 | 2,1 | 13 |
| AK90L-6 | 1,1 | 1,5 | 910 | 75,4 | 0,73 | 2,88 | 11,6 | 0,00350 | 5,9 | 2 | 2,1 | 14 |
| AK100L-6 | 1,5 | 2 | 940 | 77,5 | 0,75 | 3,72 | 15,2 | 0,00690 | 5,9 | 2 | 2,1 | 23 |
| AK112M-6 | 2,2 | 3 | 940 | 79,9 | 0,76 | 5,23 | 22,4 | 0,01380 | 6,9 | 2 | 2,1 | 25 |
| AK132S-6 | 3 | 4 | 960 | 81,6 | 0,76 | 6,98 | 29,9 | 0,02860 | 6,9 | 2,1 | 2,1 | 28 |
| AK132M-6 | 4 | 5,5 | 960 | 83,3 | 0,76 | 9,12 | 39,8 | 0,03570 | 6,9 | 2,1 | 2,1 | 45 |
| AK132M-6 | 5,5 | 7,5 | 960 | 85,0 | 0,77 | 12,1 | 54,7 | 0,04490 | 6,9 | 2,1 | 2,1 | 55 |

# AK-series

Three-phase motors with squirrel cage, protection degree IP55

**8 POLES-750 Rpm**
380-420/220-240 V Y/Δ 50 Hz
660-725/380-420 V Y/Δ 50 Hz
Insulation class F

| TYPE | Power | | Speed | Efficiency | Power factor | rated current (400V) | Nominal torque | Moment of inertia GD²/4 | Starting current ratio | Starting torque ratio | Break-down torque | Net weight |
|---|---|---|---|---|---|---|---|---|---|---|---|---|
| | KW | HP | Rpm | % | συνφ | Amp | Nm | Kgm² | Ip/In | Mp/Mn | Mm/Mn | Kg |
| AK80-8 | 0,18 | 0,25 | 640 | 55,0 | 0,61 | 0,77 | 2,7 | 0,00158 | 4,2 | 1,8 | 1,9 | 10 |
| AK80-8 | 0,25 | 0,33 | 640 | 58,0 | 0,61 | 1,02 | 3,7 | 0,00210 | 4,2 | 1,8 | 1,9 | 11 |
| AK90S-8 | 0,37 | 0,5 | 660 | 64,0 | 0,61 | 1,37 | 5,4 | 0,00290 | 4,5 | 1,8 | 1,9 | 13 |
| AK90L-8 | 0,55 | 0,75 | 660 | 67,0 | 0,61 | 1,94 | 8,0 | 0,00350 | 4,5 | 1,8 | 2 | 14 |
| AK100L-8 | 0,75 | 1 | 690 | 71,0 | 0,67 | 2,28 | 10,4 | 0,00690 | 5,5 | 1,8 | 2 | 23 |
| AK100L-8 | 1,1 | 1,5 | 690 | 73,0 | 0,67 | 3,25 | 15,2 | 0,01070 | 5,5 | 1,8 | 2 | 25 |
| AK112M-8 | 1,5 | 2 | 690 | 75,0 | 0,69 | 4,18 | 20,8 | 0,01490 | 5,5 | 1,8 | 2 | 28 |
| AK132S-8 | 2,2 | 3 | 710 | 78,0 | 0,71 | 5,73 | 29,6 | 0,03140 | 6,9 | 1,8 | 2 | 45 |
| AK132M-8 | 3 | 4 | 710 | 79,8 | 0,73 | 7,43 | 40,4 | 0,03950 | 6,9 | 1,8 | 2 | 55 |

# AK-series

Dimension sheet

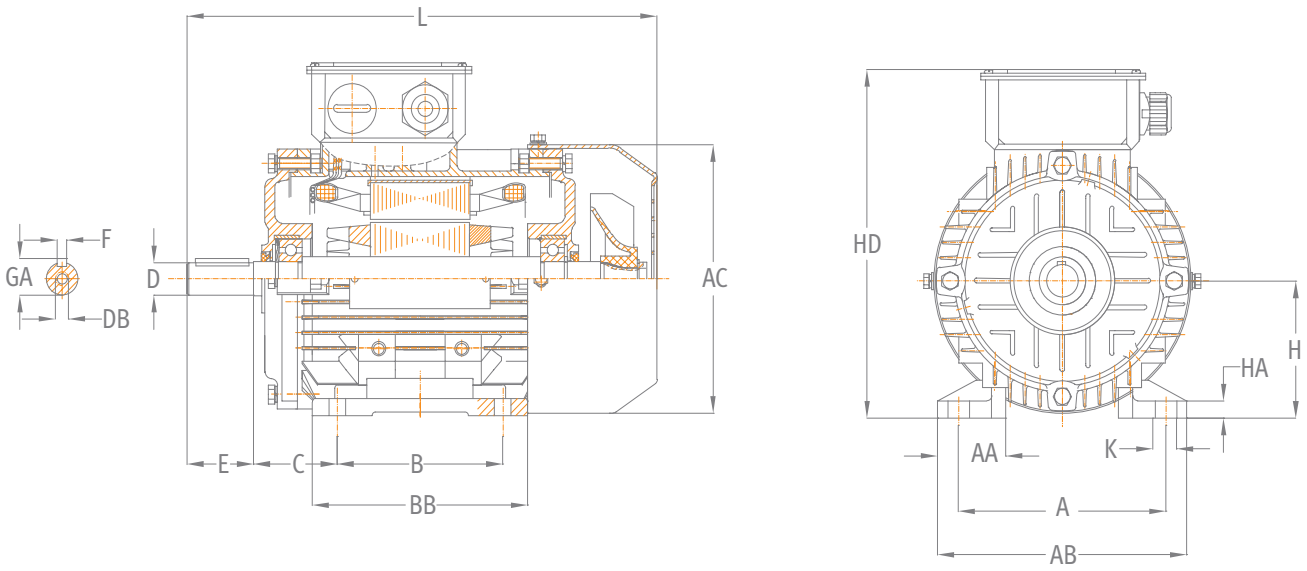


## MOUNTING B3

SIZE 56-132

| TYPE | H | A | B | C | AA | AB | BB | AC | HD | HA | K | D | E | F | GA | DB | L |
|---|---|---|---|---|---|---|---|---|---|---|---|---|---|---|---|---|---|
| AK56 | 56 | 90 | 71 | 36 | 25 | 110 | 90 | 121 | 154 | 8 | M6 | 9 | 20 | 3 | 10,2 | M3 | 192 |
| AK63 | 63 | 100 | 80 | 40 | 34 | 120 | 110 | 121 | 165 | 8 | M7 | 11 | 23 | 4 | 12,5 | M4 | 210 |
| AK71 | 71 | 112 | 90 | 45 | 36 | 132 | 120 | 137 | 180 | 9 | M7 | 14 | 30 | 5 | 16 | M5 | 250 |
| AK80 | 80 | 125 | 100 | 50 | 41 | 152 | 132 | 156 | 205 | 10 | M10 | 19 | 40 | 6 | 21,5 | M6 | 280 |
| AK90S | 90 | 140 | 100 | 56 | 47 | 168 | 140 | 176 | 230 | 12 | M10 | 24 | 50 | 8 | 27 | M8 | 310 |
| AK90L | | | 125 | | | | 165 | | | | | | | | | | 335 |
| AK100L | 100 | 160 | 140 | 63 | 50 | 192 | 176 | 196 | 250 | 12 | M12 | 28 | 60 | 8 | 31 | M10 | 370 |
| AK112M | 112 | 190 | 140 | 70 | 60 | 222 | 180 | 220 | 280 | 14 | M12 | 28 | 60 | 8 | 31 | M10 | 395 |
| AK132S | 132 | 216 | 140 | 89 | 61 | 248 | 224 | 260 | 320 | 15 | M12 | 38 | 80 | 10 | 41 | M12 | 465 |
| AK132M | | | 178 | | | | | | | | | | | | | | 495 |

# AK-series

Dimension sheet

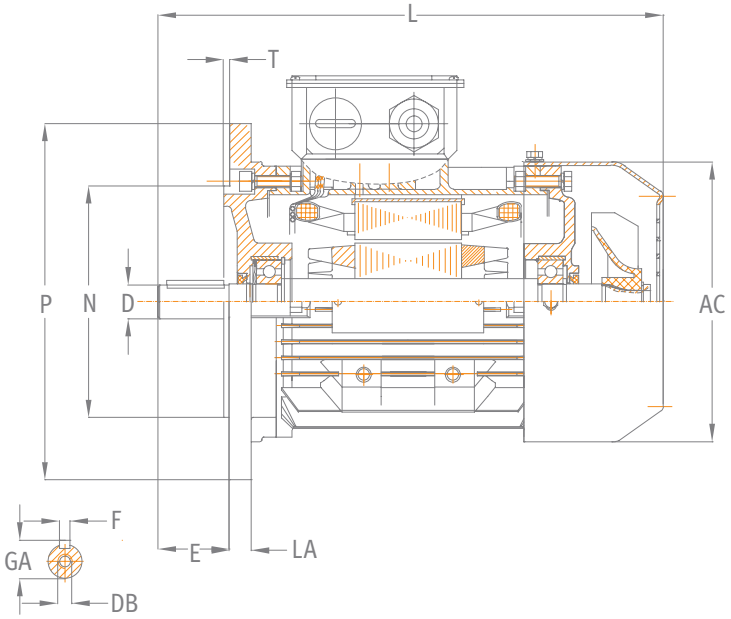


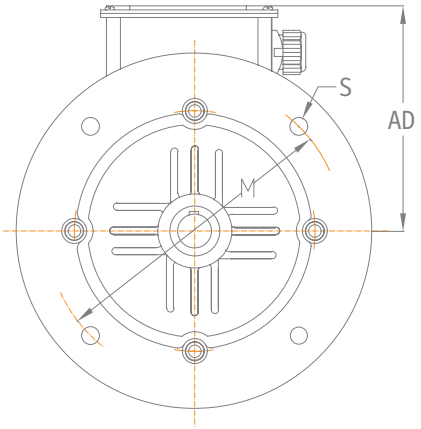


## MOUNTING B5

SIZE 56-132

| TYPE | P | N | LA | M | T | S | Z | D | E | F | GA | DB | AD | AC | L |
|---|---|---|---|---|---|---|---|---|---|---|---|---|---|---|---|
| AK56 | 120 | 80 | 9 | 100 | 3 | 7 | 4 | 9 | 20 | 3 | 10,2 | M3 | 98 | 112 | 192 |
| AK63 | 140 | 95 | 9 | 115 | 3 | 10 | 4 | 11 | 23 | 4 | 12,5 | M4 | 102 | 121 | 210 |
| AK71 | 160 | 110 | 10 | 130 | 3,5 | 10 | 4 | 14 | 30 | 5 | 16 | M5 | 109 | 137 | 250 |
| AK80 | 200 | 130 | 11 | 165 | 3,5 | 12 | 4 | 19 | 40 | 6 | 21,5 | M6 | 125 | 156 | 280 |
| AK90S | 200 | 130 | 11 | 165 | 3,5 | 12 | 4 | 24 | 50 | 8 | 27 | M8 | 140 | 176 | 310 |
| AK90L | | | | | | | | | | | | | | | 335 |
| AK100L | 250 | 180 | 14 | 215 | 4 | 15 | 4 | 28 | 60 | 8 | 31 | M10 | 150 | 196 | 370 |
| AK112M | 250 | 180 | 14 | 215 | 4 | 15 | 4 | 28 | 60 | 8 | 31 | M10 | 168 | 220 | 395 |
| AK132S | 300 | 230 | 16 | 265 | 4 | 15 | 4 | 38 | 80 | 10 | 41 | M12 | 188 | 260 | 465 |
| AK132M | | | | | | | | | | | | | | | 495 |

# AK-series
Dimension sheet

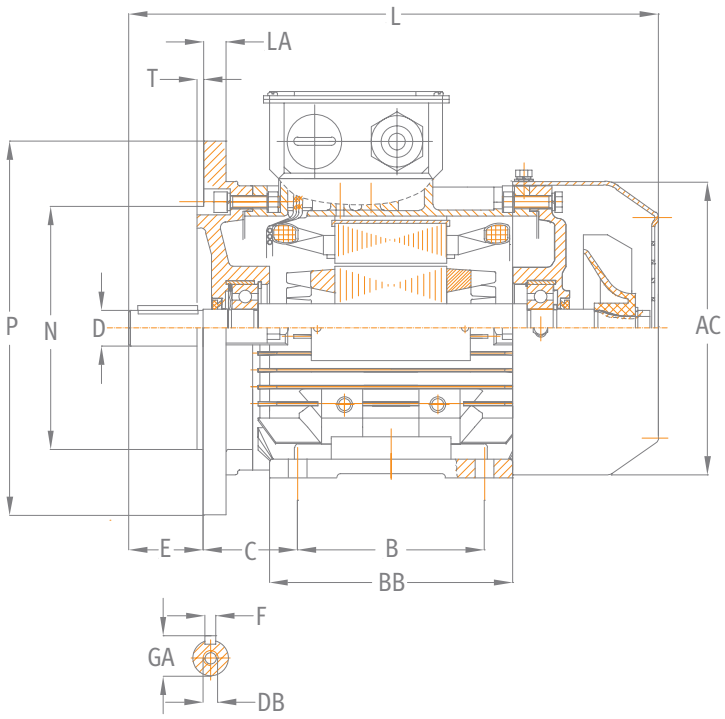


## MOUNTING B35
SIZE 56-132

| TYPE | P | N | LA | M | T | S | Z | H | A | B | C | AA |
|---|---|---|---|---|---|---|---|---|---|---|---|---|
| AK56 | 120 | 80 | 9 | 100 | 3 | 7 | 4 | 56 | 90 | 71 | 36 | 25 |
| AK63 | 140 | 95 | 9 | 115 | 3 | 10 | 4 | 63 | 100 | 80 | 40 | 34 |
| AK71 | 160 | 110 | 10 | 130 | 3.5 | 10 | 4 | 71 | 112 | 90 | 45 | 36 |
| AK80 | 200 | 130 | 11 | 165 | 3.5 | 12 | 4 | 80 | 125 | 100 | 50 | 41 |
| AK90S | 200 | 130 | 11 | 165 | 3.5 | 12 | 4 | 90 | 140 | 100 | 56 | 47 |
| AK90L | | | | | | | | | | 125 | | |
| AK100L | 250 | 180 | 14 | 215 | 4 | 15 | 4 | 100 | 160 | 140 | 63 | 50 |
| AK112M | 250 | 180 | 14 | 215 | 4 | 15 | 4 | 112 | 190 | 140 | 70 | 60 |
| AK132S | 300 | 230 | 16 | 265 | 4 | 15 | 4 | 132 | 216 | 140 | 89 | 61 |
| AK132M | | | | | | | | | | 178 | | |

# AK-series
Dimension sheet

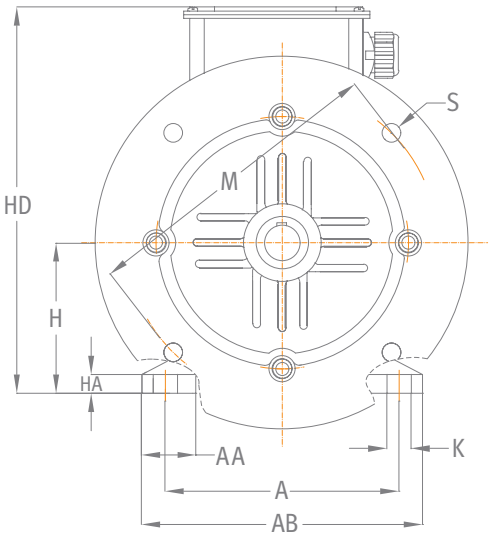


## MOUNTING B35
SIZE 56-132

| AB | BB | AC | HD | HA | K | D | E | F | GA | DB | L | TYPE |
|---|---|---|---|---|---|---|---|---|---|---|---|---|
| 110 | 90 | 112 | 154 | 8 | M6 | 9 | 20 | 3 | 10.2 | M3 | 192 | AK56 |
| 120 | 110 | 121 | 165 | 8 | M7 | 11 | 23 | 4 | 12.5 | M4 | 210 | AK63 |
| 132 | 120 | 137 | 180 | 9 | M7 | 14 | 30 | 5 | 16 | M5 | 250 | AK71 |
| 152 | 132 | 156 | 205 | 10 | M10 | 19 | 40 | 6 | 21.5 | M6 | 280 | AK80 |
| 168 | 140 | 176 | 230 | 12 | M10 | 24 | 50 | 8 | 27 | M8 | 310 | AK90S |
| | 165 | | | | | | | | | | 335 | AK90L |
| 192 | 176 | 196 | 250 | 12 | M12 | 28 | 60 | 8 | 31 | M10 | 370 | AK100L |
| 222 | 180 | 220 | 280 | 14 | M12 | 28 | 60 | 8 | 31 | M10 | 395 | AK112M |
| 248 | 224 | 260 | 320 | 15 | M12 | 38 | 80 | 10 | 41 | M12 | 465 | AK132S |
| | | | | | | | | | | | 495 | AK132M |

# AK-series

Dimension sheet

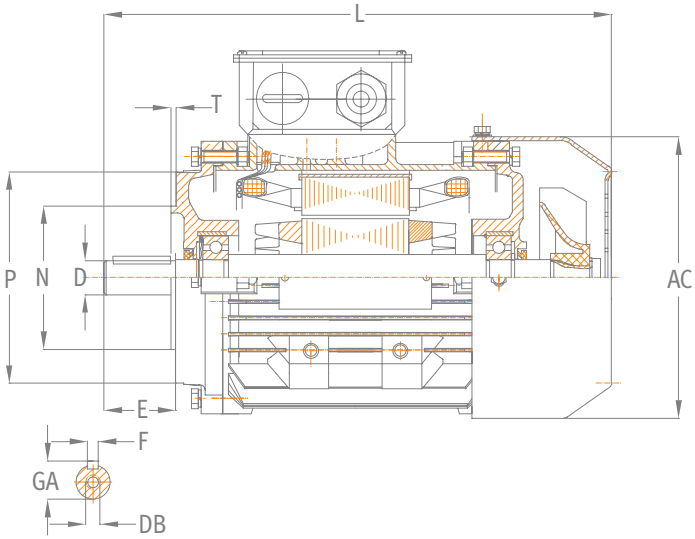


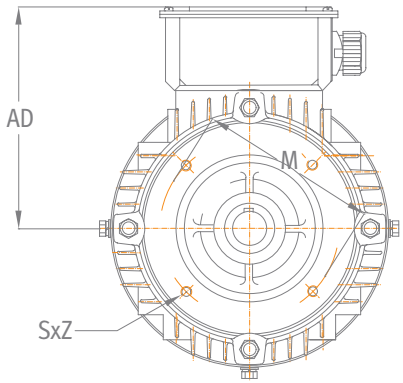


## MOUNTING B14

SIZE 56-132

### SMALL FLANGE B14A

| TYPE | P | N | M | T | S | Z | D | E | F | GA | DB | AC | AD | L |
|---|---|---|---|---|---|---|---|---|---|---|---|---|---|---|
| AK56 | 80 | 50 | 65 | 2.5 | M5 | 4 | 9 | 20 | 3 | 10.2 | M3 | 112 | 98 | 192 |
| AK63 | 90 | 60 | 75 | 2.5 | M5 | 4 | 11 | 23 | 4 | 12.5 | M4 | 121 | 102 | 210 |
| AK71 | 105 | 70 | 85 | 2.5 | M6 | 4 | 14 | 30 | 5 | 16.1 | M4 | 137 | 109 | 250 |
| AK80 | 120 | 80 | 100 | 3 | M6 | 4 | 19 | 40 | 6 | 21.5 | M5 | 156 | 125 | 280 |
| AK90S | 140 | 95 | 115 | 3 | M8 | 4 | 24 | 50 | 8 | 27 | M8 | 176 | 140 | 310 |
| AK90L | | | | | | | | | | | | | | 335 |
| AK100L | 160 | 110 | 130 | 3.5 | M8 | 4 | 28 | 60 | 8 | 31 | M8 | 196 | 150 | 370 |
| AK112L | 160 | 110 | 130 | 3.5 | M8 | 4 | 28 | 60 | 8 | 31 | M8 | 220 | 168 | 395 |
| AK132S | 200 | 130 | 165 | 3.5 | M10 | 4 | 38 | 80 | 10 | 41 | M12 | 260 | 188 | 465 |
| AK132M | | | | | | | | | | | | | | 495 |

### LARGE FLANGE B14B

| TYPE | P | N | M | T | S | Z | D | E | F | GA | DB | AC | AD | L |
|---|---|---|---|---|---|---|---|---|---|---|---|---|---|---|
| AK56 | 105 | 70 | 85 | 2.5 | M6 | 4 | 9 | 20 | 3 | 10.2 | M3 | 112 | 98 | 192 |
| AK63 | 120 | 80 | 100 | 3 | M6 | 4 | 11 | 23 | 4 | 12.5 | M4 | 121 | 102 | 210 |
| AK71 | 140 | 95 | 115 | 3 | M8 | 4 | 14 | 30 | 5 | 16.1 | M4 | 137 | 109 | 250 |
| AK80 | 160 | 110 | 130 | 3.5 | M8 | 4 | 19 | 40 | 6 | 21.5 | M5 | 156 | 125 | 280 |
| AK90S | 160 | 110 | 130 | 3.5 | M8 | 4 | 24 | 50 | 8 | 27 | M8 | 176 | 140 | 310 |
| AK90L | | | | | | | | | | | | | | 335 |
| AK100L | 200 | 130 | 165 | 3.5 | M10 | 4 | 28 | 60 | 8 | 31 | M8 | 196 | 150 | 370 |
| AK112L | 200 | 130 | 165 | 3.5 | M10 | 4 | 28 | 60 | 8 | 31 | M8 | 220 | 168 | 395 |
| AK132S | 250 | 180 | 215 | 4 | M12 | 4 | 38 | 80 | 10 | 41 | M12 | 260 | 188 | 465 |
| AK132M | | | | | | | | | | | | | | 495 |

# AK-series

Dimension sheet

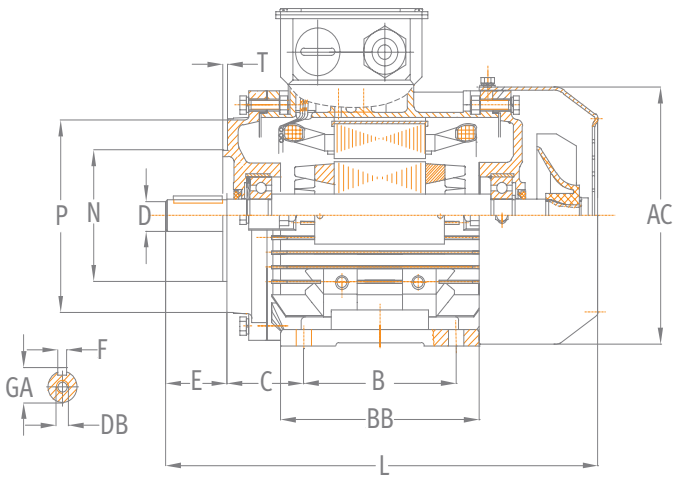


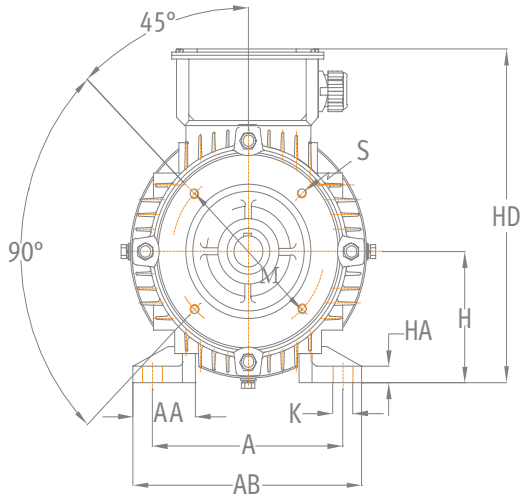


## MOUNTING B34

SIZE 56-132

| TYPE | P | N | M | T | S | Z | H | A | B | AA | AB | BB | AC | HD | HA | K | D | E | F | GA | DB | L | C |
|---|---|---|---|---|---|---|---|---|---|---|---|---|---|---|---|---|---|---|---|---|---|---|---|
| AK56 | 80 | 50 | 65 | 2.5 | M5 | 4 | 56 | 90 | 71 | 25 | 110 | 90 | 121 | 154 | 8 | M6 | 9 | 20 | 3 | 10.2 | M3 | 192 | 36 |
| AK63 | 90 | 60 | 75 | 2.5 | M5 | 4 | 63 | 100 | 80 | 34 | 120 | 110 | 121 | 165 | 8 | M7 | 11 | 23 | 4 | 12.5 | M4 | 210 | 40 |
| AK71 | 105 | 70 | 85 | 2.5 | M6 | 4 | 71 | 112 | 90 | 36 | 132 | 120 | 137 | 180 | 9 | M7 | 14 | 30 | 5 | 16 | M5 | 250 | 45 |
| AK80 | 120 | 80 | 100 | 3 | M6 | 4 | 80 | 125 | 100 | 41 | 152 | 132 | 156 | 205 | 10 | M10 | 19 | 40 | 6 | 21.5 | M6 | 280 | 50 |
| AK90S | 140 | 95 | 115 | 3 | M8 | 4 | 90 | 140 | 100 | 47 | 168 | 140 | 176 | 230 | 12 | M10 | 24 | 50 | 8 | 27 | M8 | 310 | 56 |
| AK90L | | | | | | | | | 125 | | | 165 | | | | | | | | | | 335 | |
| AK100L | 160 | 110 | 130 | 3.5 | M8 | 4 | 100 | 160 | 140 | 50 | 192 | 176 | 196 | 250 | 12 | M12 | 28 | 60 | 8 | 31 | M10 | 370 | 63 |
| AK112M | 160 | 110 | 130 | 3.5 | M8 | 4 | 112 | 190 | 140 | 60 | 222 | 180 | 220 | 280 | 14 | M12 | 28 | 60 | 8 | 31 | M10 | 395 | 71 |
| AK132S | 200 | 130 | 165 | 3.5 | M10 | 4 | 132 | 216 | 140 | 61 | 248 | 224 | 260 | 320 | 15 | M12 | 38 | 80 | 10 | 41 | M12 | 465 | 89 |
| AK132M | | | | | | | | | 178 | | | | | | | | | | | | | 495 | |

## BEARING SIZES FOR AK SERIES MOTORS

| Frame | Drive-End | | Non-Drive End | |
|---|---|---|---|---|
| | 2p | 4, 6, 8p | 2p | 4, 6, 8p |
| 56 | 6201ZZ C3 | 6201ZZ C3 | 6201ZZ C3 | 6201ZZ C3 |
| 63 | 6201ZZ C3 | 6201ZZ C3 | 6201ZZ C3 | 6201ZZ C3 |
| 71 | 6202ZZ C3 | 6202ZZ C3 | 6202ZZ C3 | 6202ZZ C3 |
| 80 | 6204ZZ C3 | 6204ZZ C3 | 6204ZZ C3 | 6204ZZ C3 |
| 90 | 6205ZZ C3 | 6205ZZ C3 | 6205ZZ C3 | 6205ZZ C3 |
| 100 | 6206ZZ C3 | 6206ZZ C3 | 6206ZZ C3 | 6206ZZ C3 |
| 112 | 6306ZZ C3 | 6306ZZ C3 | 6306ZZ C3 | 6306ZZ C3 |
| 132 | 6308ZZ C3 | 6308ZZ C3 | 6308ZZ C3 | 6308ZZ C3 |

# AK-series
Dimension sheet

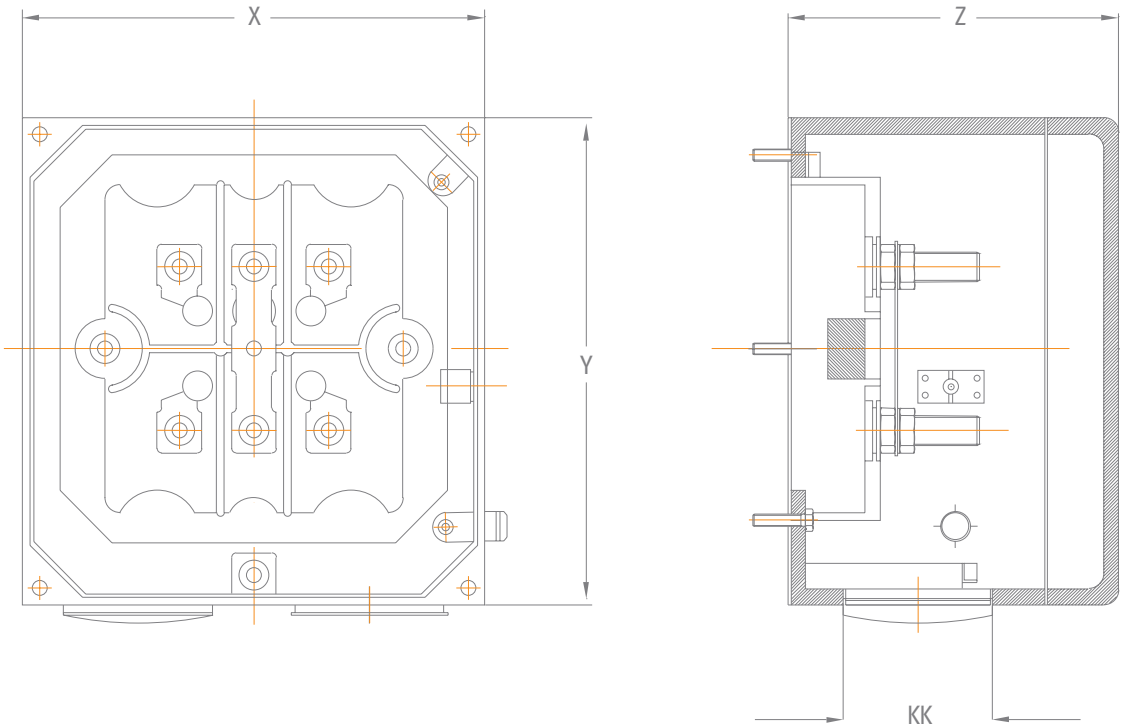


## TERMINAL BOX DIMENSIONS FOR AK SERIES
SIZE 56 - 132

| TYPE | X | Y | Z | KK |
|---|---|---|---|---|
| AK56 | 92 | 92 | 45 | 2 x M16 |
| AK63 | | | | |
| AK71 | | | | |
| AK80 | | | | |
| AK90 | 100 | 100 | 49 | 2 x M20 |
| AK100 | | | | |
| AK112 | 112 | 112 | 57 | 2 x M25 |
| AK132 | | | | |

# MK series

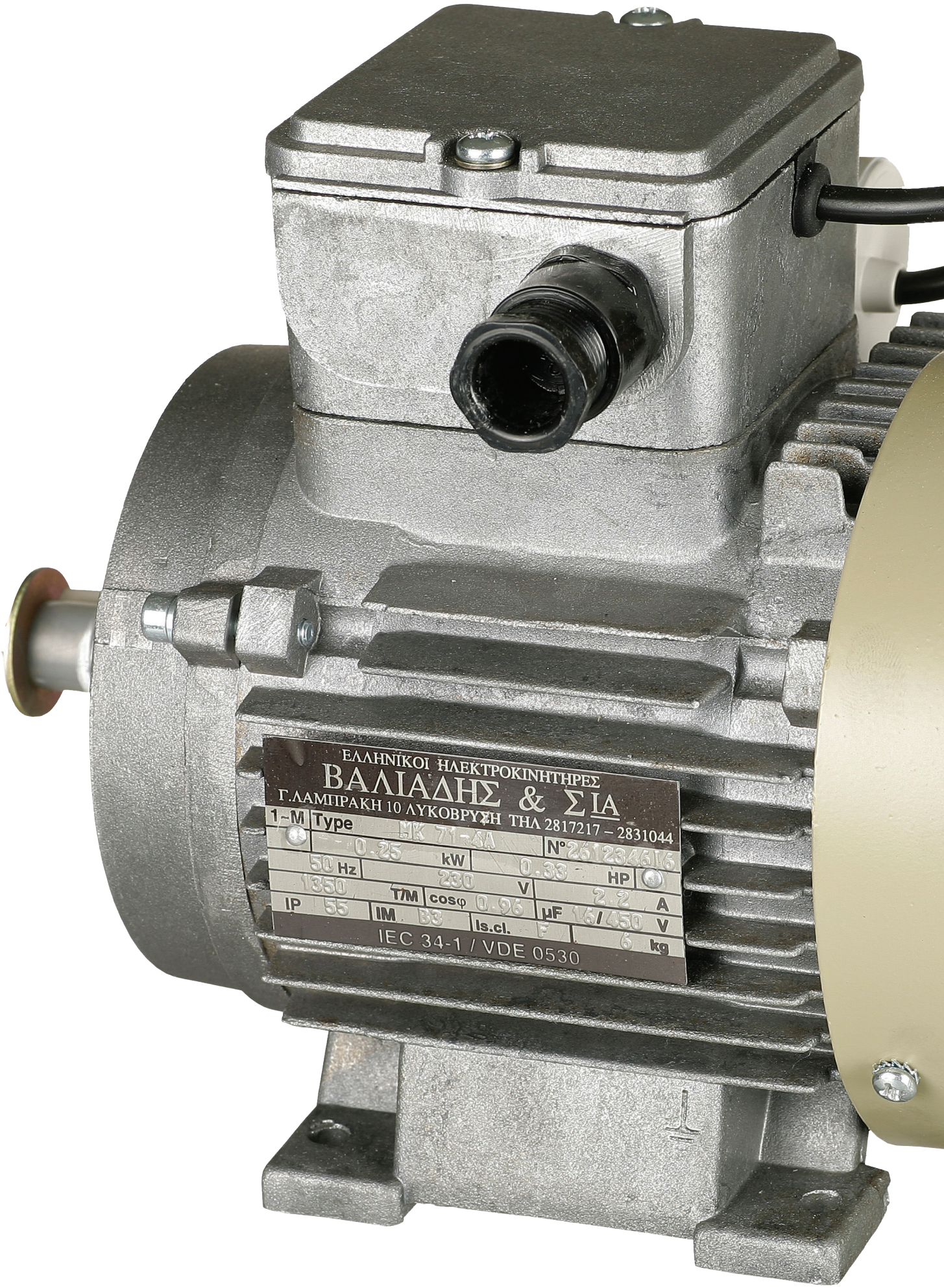
ΕΛΛΗΝΙΚΟΙ ΗΛΕΚΤΡΟΚΙΝΗΤΗΡΕΣ
ΒΑΛΙΑΔΗΣ & ΣΙΑ
Γ.ΛΑΜΠΡΑΚΗ 10 ΛΥΚΟΒΡΥΣΗ ΤΗΛ 2817217 – 2831044
1~M
Type
0.25
kW
N°
50 Hz
230
V
0.33
HP
1350
T/M
cosφ
0.96
2.2
A
IP
55
IM
B3
Is.cl.
F
µF
/450
V
6
kg
IEC 34-1 / VDE 0530

# MK-series

## Technical description
## IEC 71-100

220-230 V
50 Hz

## Applications

- Fans
- Pumps
- Food industry

## Standard features

- Industrial single phase series of aluminium housing motors
- Permanent cpacitor run
- IP55 protection degree
- Insulation class F, temperature rise 80°C
- Terminal box rotation at 180°
- SKF or NSK bearings
- Not painted, pure aluminioum appearance

## Optional features

- Electronic capacitor for high starting torque
- Special voltage / frequency
- 110V/50Hz
- Brake kits for all motors
- Cable and switch disposition

# MK-series

Single-phase induction motors with permanent capacitor

Single – phase motors are available in five sizes (from MK 71 to MK100 L).
Their protection degree is IP 55 and their insulation class is F. The power varies between 0.33 HP to 3 HP at 1500 RPM and between 0.5 HP to 4 HP at 3000 RPM.
Type of construction is B3, B5, B3/B5, B14, B34.

Conditions of operation:

- Temperature should vary between –5°C to 30°C.
- Maximum altidute is 1000m above the sea surface.
- Relative humidity should not surpass 65 15% at 20°C.

Direction of rotation and connection are refered to in the following figures:

Counter clockwise

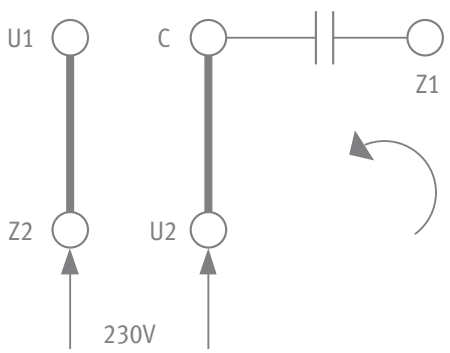


Clockwise

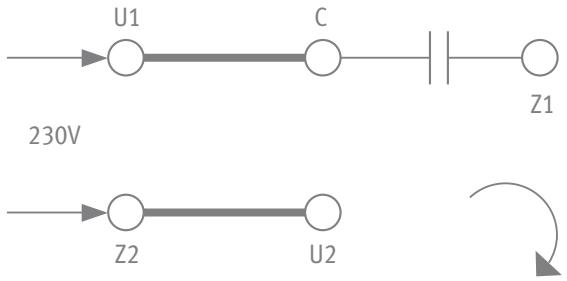


More details about single - phase motors are referred to in the next pages, as well as technical characteristics and dimension drawings.

# MK-series

Single-phase induction motors with permanent capacitor

**2 POLES - 3.000 Rpm**
**Degree of protection IP55**
**230V, 50Hz**
Insulation class F

| TYPE | Rated output | | Rated speed | Efficiency | Power factor | Rated current | Rated torque | Moment of Inertia | Break away starting current | Break away Torque | Break-down Torque | Capacitor | Net weight |
|---|---|---|---|---|---|---|---|---|---|---|---|---|---|
| | kW | HP | Rpm | % | cosφ | In(A) | Mn(Nm) | (GD2) /4 (kgm²) | Ip/In | Mp/Mn | Mm/Mn | μF/V | kg |
| MK 71-2 | 0.37 | 0.5 | 2700 | 60 | 0.85 | 3.3 | 1.3 | 0.0016 | 4.2 | 0.6 | 2.3 | 16/450 | 7.5 |
| MK 71-2 | 0.55 | 0.75 | 2700 | 66 | 0.9 | 4.2 | 1.9 | 0.0017 | 4.4 | 0.6 | 2.5 | 25/450 | 8.5 |
| MK 80-2 | 0.75 | 1 | 2750 | 57 | 0.86 | 6.9 | 2.5 | 0.0021 | 3.5 | 0.7 | 1.9 | 35/400 | 13 |
| MK 80-2 | 1.1 | 1.5 | 2800 | 64 | 0.91 | 8.5 | 3.7 | 0.0024 | 3.3 | 0.7 | 1.9 | 45/400 | 14.5 |
| MK90S-2 | 1.5 | 2 | 2800 | 68 | 0.95 | 10.5 | 5 | 0.0027 | 4.3 | 0.8 | 1.8 | 60/450 | 18.2 |
| MK90L-2 | 2.2 | 3 | 2850 | 72 | 0.94 | 14.3 | 7.4 | 0.003 | 4.5 | 0.6 | 2 | 80/450 | 21.7 |
| MK100L-2 | 3 | 4 | 2750 | 72 | 0.95 | 19 | 10.4 | 0.0050 | 4.5 | 0.7 | 2 | 90/450 | 31.5 |

**4 POLES - 1.500 Rpm**
**Degree of protection IP55**
**230V, 50Hz**
Insulation class F

| TYPE | Rated output | | Rated speed | Efficiency | Power factor | Rated current | Rated torque | Moment of Inertia | Break away starting current | Break away Torque | Break-down Torque | Capacitor | Net weight |
|---|---|---|---|---|---|---|---|---|---|---|---|---|---|
| | kW | HP | Rpm | % | cosφ | In(A) | Mn(Nm) | (GD2) /4 (kgm²) | Ip/In | Mp/Mn | Mm/Mn | μF/V | kg |
| MK 71-4 | 0.25 | 0.33 | 1350 | 51 | 0.96 | 2.3 | 1.8 | 0.0018 | 2.2 | 0.8 | 1.5 | 16/450 | 6.7 |
| MK 71-4 | 0.37 | 0.5 | 1350 | 58 | 0.93 | 3 | 2.5 | 0.002 | 2.7 | 0.7 | 1.5 | 20/450 | 7.9 |
| MK 80-4 | 0.55 | 0.75 | 1350 | 52 | 0.81 | 5.7 | 3.7 | 0.0021 | 2.6 | 0.7 | 1.7 | 25/450 | 12.9 |
| MK 80-4 | 0.75 | 1 | 1350 | 60 | 0.91 | 6.2 | 5.1 | 0.0023 | 2.7 | 0.7 | 1.6 | 30/450 | 14 |
| MK 90S-4 | 1.1 | 1.5 | 1390 | 63 | 0.94 | 8.2 | 7.5 | 0.0038 | 2.8 | 0.6 | 1.6 | 35/450 | 18.1 |
| MK 90L-4 | 1.5 | 2 | 1390 | 64 | 0.85 | 11 | 10 | 0.0043 | 3.2 | 0.6 | 1.5 | 45/450 | 22 |
| MK 100L-4 | 2.2 | 3 | 1425 | 67 | 0.9 | 16 | 15 | 0.0053 | 4.6 | 0.6 | 2.1 | 90/450 | 31.5 |

# MK-series

Dimension sheet

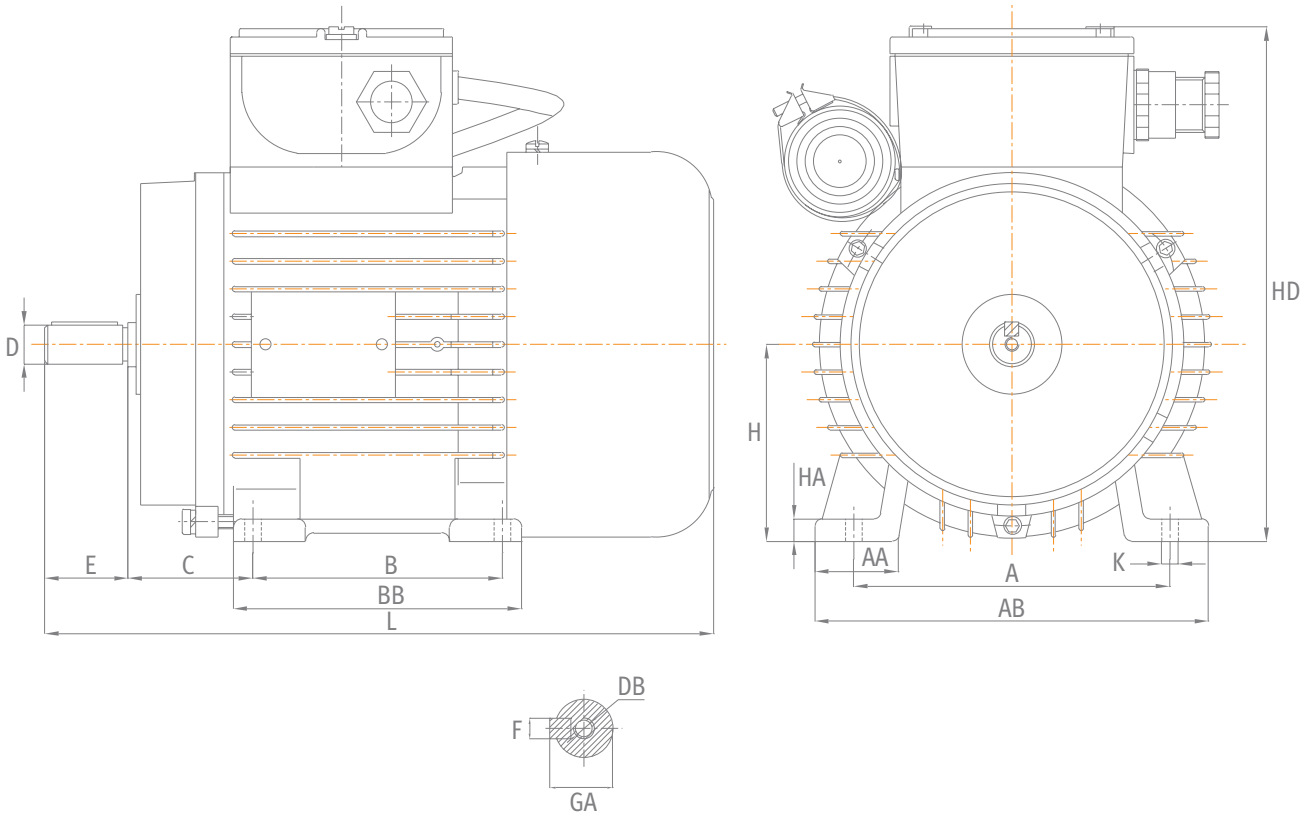


## MOUNTING B3

SIZE 71-100

| TYPE | H | A | B | C | AA | AB | BB | HD | HA | K | D | E | F | GA | DB | L |
|---|---|---|---|---|---|---|---|---|---|---|---|---|---|---|---|---|
| MK71 | 71 | 112 | 90 | 45 | 30 | 142 | 104 | 186 | 8 | M6 | 14 | 30 | 5 | 16,1 | M4 | 243 |
| MK80 | 80 | 125 | 100 | 50 | 32 | 151 | 132 | 199 | 10 | M10 | 19 | 40 | 6 | 21,5 | M5 | 282 |
| MK90S | 90 | 140 | 100 | 56 | 35 | 166 | 135 | 220 | 10 | M10 | 24 | 50 | 8 | 27 | M8 | 315 |
| MK90L | | | 125 | | | | 158 | | | | | | | | | 335 |
| MK100L | 100 | 160 | 140 | 63 | 40 | 190 | 182 | 239 | 12 | M12 | 28 | 60 | 8 | 31 | M8 | 368 |

# MK-series

Dimension sheet

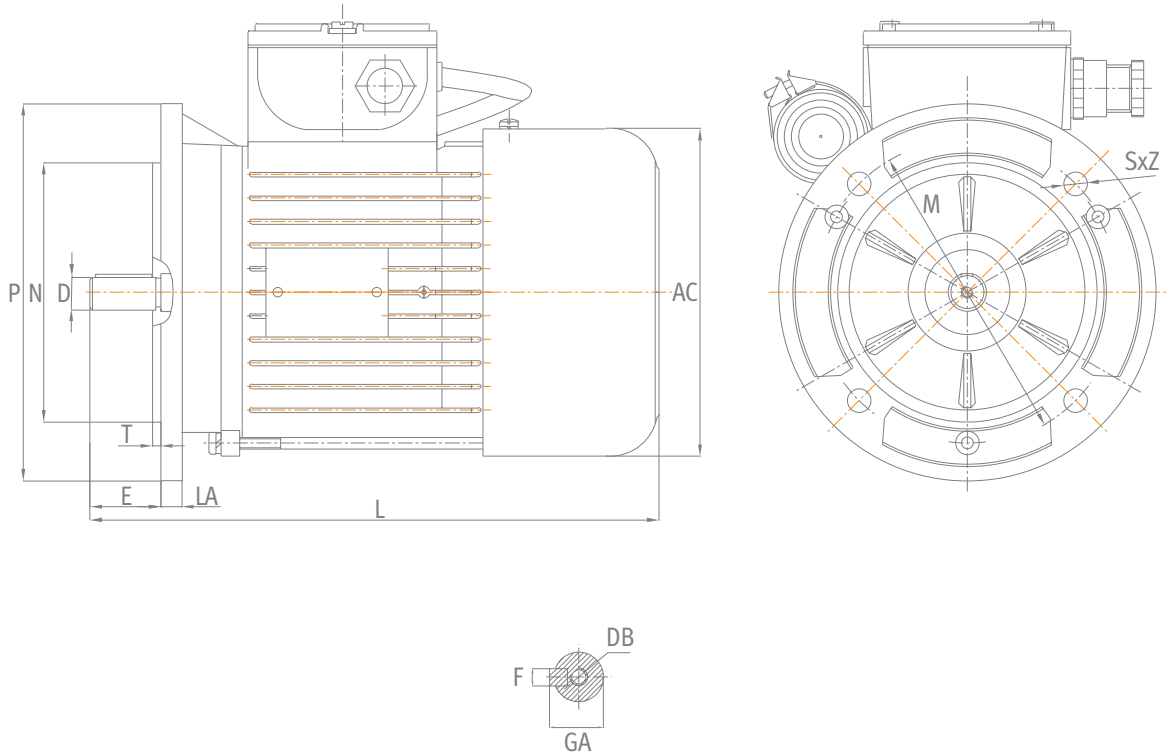


## MOUNTING B5

SIZE 71-100

| TYPE | P | N | M | T | LA | S | Z | AC | D | E | F | GA | DB | L |
|---|---|---|---|---|---|---|---|---|---|---|---|---|---|---|
| MK71 | 160 | 110 | 130 | 3,5 | 9 | 10 | 4 | 140 | 14 | 30 | 5 | 16,1 | M4 | 243 |
| MK80 | 200 | 130 | 165 | 3,5 | 10 | 12 | 4 | 156 | 19 | 40 | 6 | 21,5 | M5 | 282 |
| MK90S | 200 | 130 | 165 | 3,5 | 10 | 12 | 4 | 170 | 24 | 50 | 8 | 27 | M8 | 315 |
| MK90L | | | | | | | | | | | | | | 335 |
| MK100L | 250 | 180 | 215 | 4 | 11 | 15 | 4 | 195 | 28 | 60 | 8 | 31 | M8 | 368 |

# MK-series

Dimension sheet

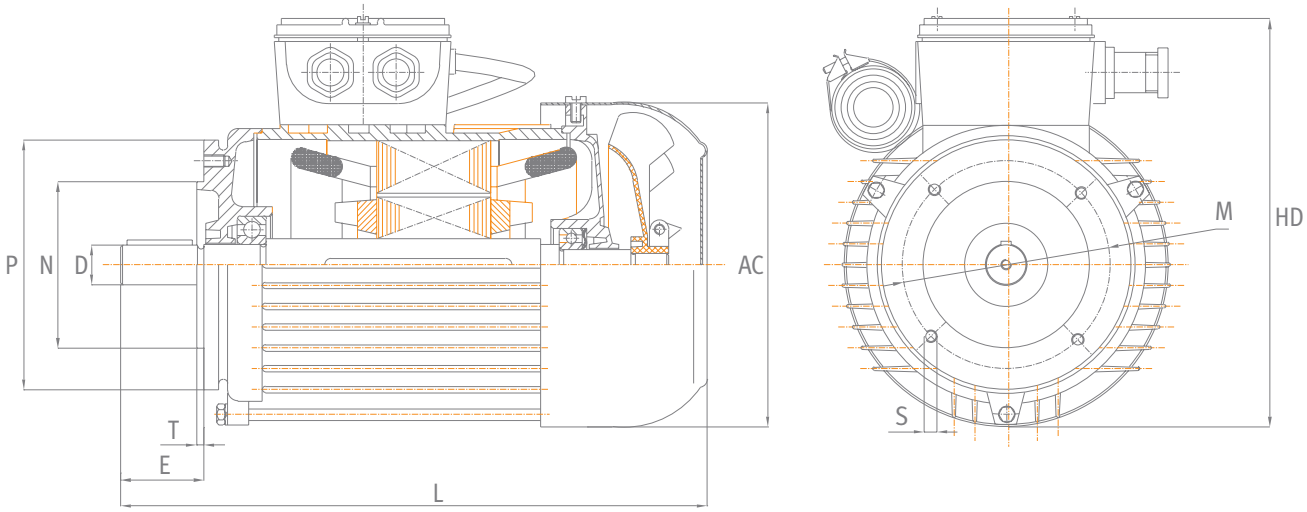


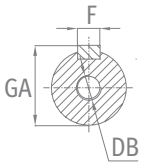


## MOUNTING B14

SIZE 71-100

| TYPE | P | N | M | T | S | Z | AC | D | E | F | GA | DB | L |
|---|---|---|---|---|---|---|---|---|---|---|---|---|---|
| MK71 | 105 | 70 | 85 | 2,5 | M6 | 4 | 140 | 14 | 30 | 5 | 16,1 | M4 | 243 |
| MK80 | 120 | 80 | 100 | 3,0 | M6 | 4 | 156 | 19 | 40 | 6 | 21,5 | M5 | 282 |
| MK90S | 140 | 95 | 115 | 3,0 | M8 | 4 | 170 | 24 | 50 | 8 | 27 | M8 | 315 |
| MK90L | | | | | | | | | | | | | 335 |
| MK100L | 160 | 110 | 130 | 3,5 | M8 | 4 | 195 | 28 | 60 | 8 | 31 | M8 | 368 |

# KA-A series

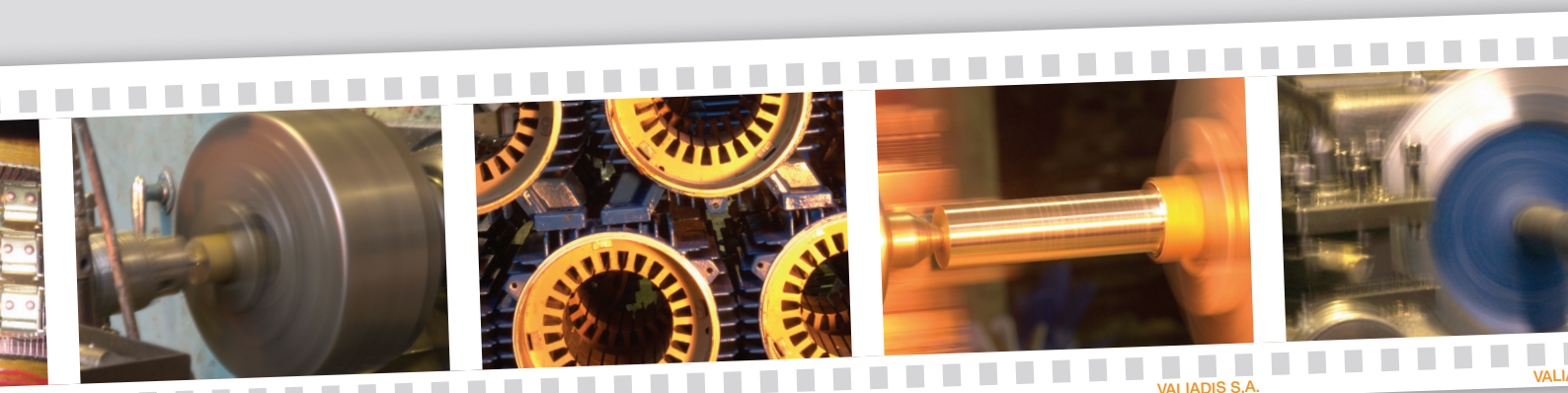
VALIADIS S.A.
VALIADIS S.A.
VALIADIS S.A.
VALI

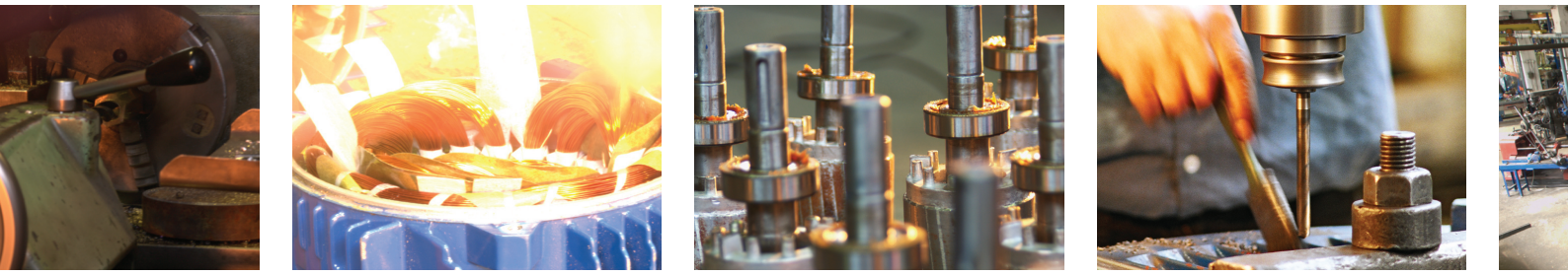
VALIADIS S.A.
VALIADIS S.A.
VALIADIS S.A.
VALIADIS S.A.

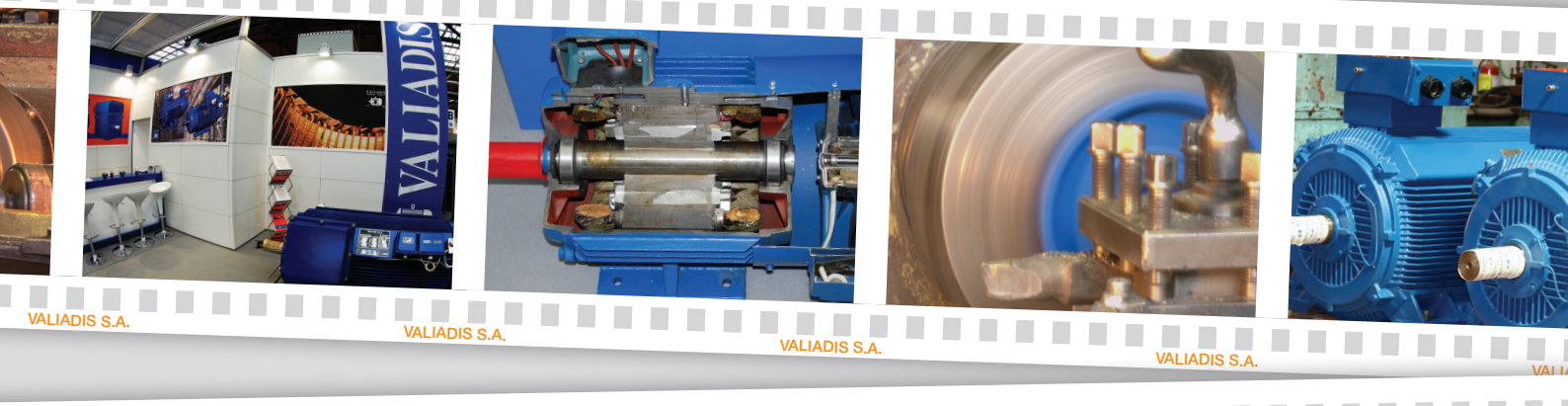
VALIADIS
VALIADIS S.A.
VALIADIS S.A.
VALIADIS S.A.
VALIADIS S.A.

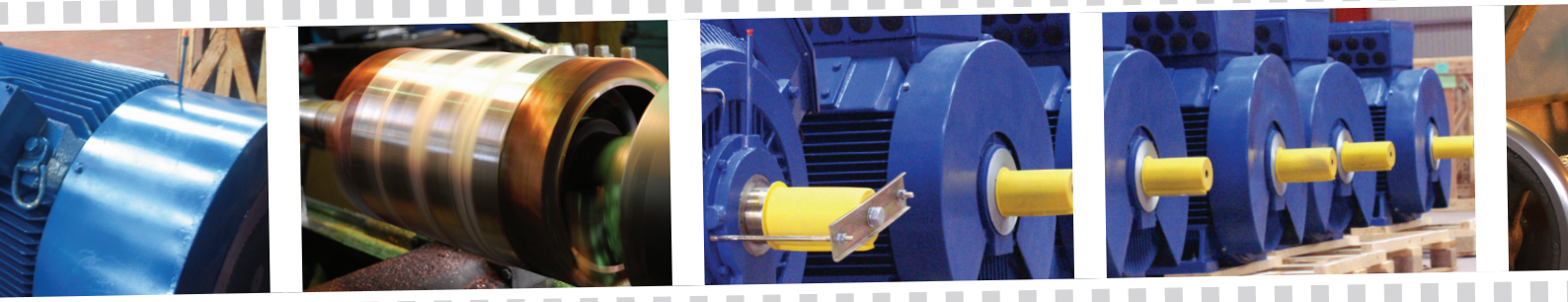
VALIADIS S.A.
VALIADIS S.A.
VALIADIS S.A.
VALIADIS S.A.

VALIADIS S.A.
VALIADIS S.A.
VALIADIS S.A.
VALIADIS S.A.

# KA-A-series

160-280

## Standard features

- Vertical hollow shaft motors for deep well pumps
- WP1 protection degree
- Insulation class F temperature rise 80°C
- SKF or NSK bearings
- PTC protection for the windings
- Heavy duty thrust bearing on the top side
- Oil lubrication for the DE bearing

## Options

- PT100 in the winding
- Water cooled DE bearing

# KA-A-series

Three-phase Vertical Hollow Shaft motors with squirrel cage, protection degree WP1

**NEMA DESIGN**
**4 POLES-1.500 Rpm**
660-725/380-420 V Y/Δ 50 Hz
Insulation class F

| TYPE | Power | | Speed | Efficiency | Power factor | Rated current (400V) | Nominal torque | Starting current ratio | Starting torque ratio | Break-down torque | Down-thrust load | Net weight |
|---|---|---|---|---|---|---|---|---|---|---|---|---|
| | KW | HP | Rpm | % | συνφ | Amp | Nm | Ip/In | Mp/Mn | Mm/Mn | lb | Kg |
| KA-A 160 | 11 | 15 | 1460 | 86,5 | 0,85 | 22 | 72 | 7 | 1,8 | 2 | 3.740 | 236 |
| KA-A 160 | 15 | 20 | 1485 | 87,5 | 0,86 | 29 | 96 | 7 | 1,8 | 2 | 3.740 | 248 |
| KA-A 180 | 18,5 | 25 | 1465 | 88,0 | 0,86 | 35 | 121 | 7 | 1,7 | 2 | 3.740 | 305 |
| KA-A 180 | 22 | 30 | 1470 | 88,5 | 0,86 | 42 | 143 | 7 | 1,7 | 2 | 3.740 | 310 |
| KA-A 200 | 30 | 40 | 1480 | 89,5 | 0,87 | 56 | 194 | 7 | 1,7 | 2 | 5.000 | 390 |
| KA-A 200 | 37 | 50 | 1480 | 90,0 | 0,87 | 68 | 239 | 7 | 1,7 | 2 | 5.000 | 410 |
| KA-A 200 | 45 | 60 | 1480 | 90,5 | 0,87 | 83 | 290 | 7 | 1,7 | 2 | 5.000 | 430 |
| KA-A 250 | 55 | 75 | 1480 | 91,0 | 0,88 | 99 | 355 | 7 | 1,7 | 2 | 8.800 | 660 |
| KA-A 250 | 75 | 100 | 1480 | 91,5 | 0,88 | 135 | 484 | 7 | 1,7 | 2 | 8.800 | 700 |
| KA-A 250 | 90 | 125 | 1480 | 91,5 | 0,88 | 162 | 581 | 7 | 1,7 | 2 | 8.800 | 730 |
| KA-A 280 | 110 | 150 | 1490 | 92,0 | 0,88 | 196 | 705 | 7 | 1,7 | 2 | 11.600 | 940 |
| KA-A 280 | 132 | 180 | 1490 | 92,5 | 0,88 | 234 | 846 | 7 | 1,7 | 2 | 11.600 | 990 |
| KA-A 280 | 150 | 200 | 1490 | 92,5 | 0,88 | 266 | 961 | 7 | 1,7 | 2 | 11.600 | 1.020 |
| KA-A 280 | 185 | 250 | 1490 | 92,5 | 0,88 | 328 | 1186 | 7 | 1,7 | 2 | 11.600 | 1.140 |
| KA-A 280 | 200 | 270 | 1490 | 93,0 | 0,88 | 353 | 1282 | 7 | 1,7 | 2 | 11.600 | 1.190 |
| KA-A 280 | 220 | 300 | 1490 | 93,0 | 0,88 | 388 | 1410 | 7 | 1,7 | 2 | 11.600 | 1.240 |

**BEARINGS**
**VERTICAL HOLLOW SHAFT MOTORS**

| FRAME | THRUST | GUIDE |
|---|---|---|
| | 4p | 4p |
| 160 | 7314B | 6211-Z |
| 180 | 7315B | 6212-Z |
| 200 | 7318B | 6213-Z |
| 250 | 7322B | 6317-Z |
| 280 | 7328B | 6318-Z |

# KA-A-series

Dimension sheet

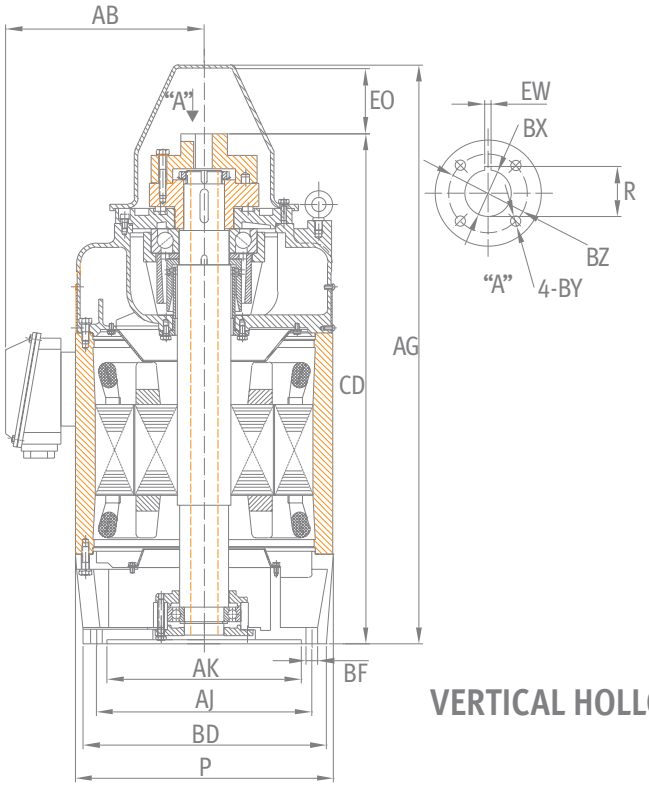


## VERTICAL HOLLOW SHAFT MOTORS
## NEMA DESIGN

SIZES 160 - 280

| TYPE | Power | | Dimensions in inches | | | | | | | | | | | | | |
|---|---|---|---|---|---|---|---|---|---|---|---|---|---|---|---|---|
| | KW | HP | BD | AJ | AK | BF | BX | BZ | EW | R | BY | CD | EO› | P | AB | AG |
| KA-A 160 | 11 | 15 | 12 | 9,125 | 8,25 | 0,44 | 1,001 | 1,375 | 0,25 | 1,114 | 10x32 | 29,02 | 3,15 | 13,8 | 10,4 | 32,9 |
| KA-A 160 | 15 | 20 | | | | | | | | | | | | | | |
| KA-A 180 | 18,5 | 25 | 16,5 | 14,75 | 13,5 | 0,69 | 1,001 | 1,375 | 0,25 | 1,114 | 10x32 | 30,31 | 3,54 | 15,6 | 11,4 | 34,3 |
| KA-A 180 | 22 | 30 | | | | | | | | | | | | | | |
| KA-A 200 | 30 | 40 | 16,5 | 14,75 | 13,5 | 0,69 | 1,188 | 1,75 | 0,25 | 1,304 | 1/4x20 | 34,29 | 3,74 | 17,5 | 13 | 38,6 |
| KA-A 200 | 37 | 50 | | | | | | | | | | | | | | |
| KA-A 200 | 45 | 60 | | | | | | | | | | | | | | |
| KA-A 250 | 55 | 75 | 16,5 | 14,75 | 13,5 | 0,69 | 1,188 | 1,75 | 0,25 | 1,304 | 1/4x20 | 45 | 4,13 | 21,3 | 15,60 | 50 |
| KA-A 250 | 75 | 100 | 16,5 | 14,75 | 13,5 | 0,69 | 1,438 | 2,125 | 0,375 | 1,605 | 1/4x20 | 45 | 4,13 | 21,3 | 15,6 | 50 |
| KA-A 250 | 90 | 125 | | | | | | | | | | | | | | |
| KA-A 280 | 110 | 150 | 16,5 | 14,75 | 13,5 | 0,69 | 1,688 | 2,5 | 0,375 | 1,859 | 1/4x20 | 51,62 | 4,72 | 23,6 | 17,5 | 57,7 |
| KA-A 280 | 132 | 180 | | | | | | | | | | | | | | |
| KA-A 280 | 150 | 200 | | | | | | | | | | | | | | |
| KA-A 280 | 185 | 250 | 20 | 14,75 | 13,5 | 0,69 | 1,938 | 2,5 | 0,5 | 2,16 | 1/4x20 | 53,5 | 4,72 | 23,6 | 21,26 | 58,5 |
| KA-A 280 | 200 | 270 | | | | | | | | | | | | | | |
| KA-A 280 | 220 | 300 | | | | | | | | | | | | | | |

VALIADIS S.A.

VALIADIS S.A.

VALIADIS S.A.

VALIADIS S.A.

VALIADIS S.A.

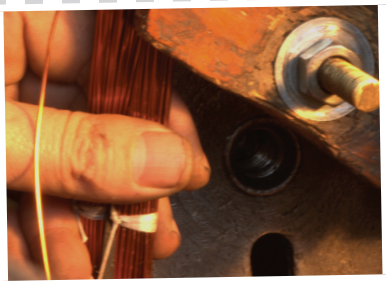

VALIADIS S.A.

VALIADIS S.A.

VALIADIS S.A.

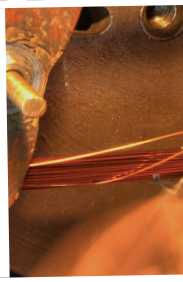

VALIADIS S.A.

VALIADIS S.A.

VALIADIS S.A.

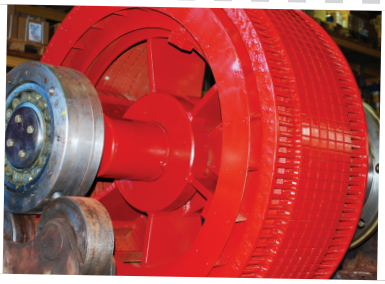

VALIADIS S.A.

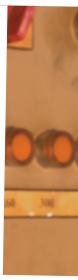

VALIADIS S.A.

VALIADIS S.A.

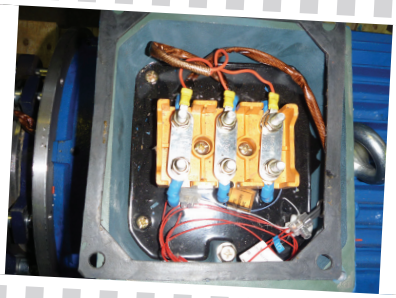

VALIADIS S.A.

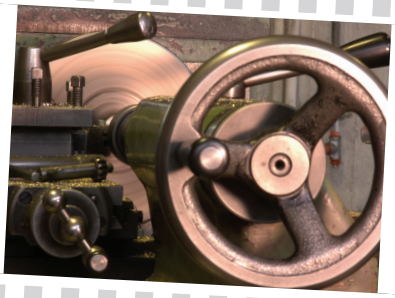

VALIADIS S.A.

VALIADIS S.A.

VALIADIS S.A.

VALIADIS S.A.

VALIADIS S.A.

# AB series

# AB-series

Technical description
IEC 160-355

## Standard features

- Protection IP23
- Insulation class F, temperature rise 80°C
- Standard PTC protection in the winding (1 per phase series connected)
- Top mounted terminal box
- Terminal box rotation at 180o
- SKF or NSK bearings

## Options

- PT 100 in the windings and bearings
- Double shaft
- Anticondensation heater

# AB-series

Three-phase motors with squirrel cage, protection degree IP23

**2 POLES-3.000 Rpm**
660-725/380-420 V Y/Δ 50 Hz
Insulation class F

| TYPE | Power | | Speed | Efficiency | Power factor | Rated current (400V) | Nominal Torque | Moment of inertia GD²/4 | Starting current ratio | Starting Torque ratio | Break-down Torque | Net weight |
|---|---|---|---|---|---|---|---|---|---|---|---|---|
| | KW | HP | Rpm | % | συνφ | Amp | Nm | Kgm² | Ip/In | Mp/Mn | Mm/Mn | Kg |
| AB160-2 | 15 | 20 | 2920 | 89,5 | 0,88 | 28 | 49 | 0,067 | 6,5 | 2,0 | 2,5 | 132 |
| AB160-2 | 18,5 | 25 | 2925 | 91,0 | 0,88 | 33 | 60 | 0,068 | 6,8 | 2,1 | 2,6 | 141 |
| AB160-2 | 22 | 30 | 2925 | 88,2 | 0,87 | 41 | 71 | 0,070 | 7,0 | 2,1 | 2,6 | 152 |
| AB180-2 | 30 | 40 | 2935 | 90,8 | 0,89 | 34 | 97 | 0,125 | 7,0 | 2,2 | 2,8 | 210 |
| AB180-2 | 37 | 50 | 2940 | 91,2 | 0,89 | 66 | 120 | 0,135 | 7,0 | 2,2 | 2,8 | 222 |
| AB200-2 | 45 | 60 | 2945 | 91,8 | 0,89 | 80 | 145 | 0,188 | 7,0 | 2,1 | 2,7 | 285 |
| AB200-2 | 55 | 75 | 2945 | 91,7 | 0,89 | 97 | 177 | 0,210 | 7,0 | 2,1 | 2,7 | 297 |
| AB225-2 | 75 | 100 | 2950 | 92,5 | 0,89 | 131 | 241 | 0,362 | 7,2 | 2,1 | 2,8 | 367 |
| AB250-2 | 90 | 125 | 2960 | 93,5 | 0,90 | 154 | 289 | 0,531 | 7,5 | 2,4 | 3,0 | 507 |
| AB250-2 | 110 | 150 | 2965 | 94,5 | 0,90 | 187 | 353 | 0,584 | 7,5 | 2,4 | 3,0 | 543 |
| AB280-2 | 132 | 180 | 2960 | 94,0 | 0,91 | 223 | 423 | 0,793 | 7,5 | 2,2 | 3,0 | 700 |
| AB315-2 | 160 | 220 | 2970 | 94,4 | 0,89 | 275 | 513 | 1,592 | 6,5 | 1,6 | 2,8 | 942 |
| AB315-2 | 200 | 270 | 2965 | 94,2 | 0,87 | 352 | 641 | 1,751 | 7,2 | 1,6 | 2,8 | 970 |
| AB315-2 | 250 | 340 | 2965 | 94,4 | 0,87 | 439 | 801 | 1,935 | 7,2 | 1,6 | 2,8 | 1.035 |
| AB315-2 | 315 | 430 | 2970 | 95,6 | 0,90 | 528 | 1009 | 2,503 | 7,0 | 1,9 | 3,0 | 1.180 |
| AB315X-2 | 355 | 480 | 2965 | 95,5 | 0,87 | 617 | 1140 | 2,629 | 7,0 | 1,5 | 2,1 | 1.286 |
| AB315X-2 | 400 | 540 | 2970 | 95,9 | 0,91 | 662 | 1284 | 2,997 | 7,0 | 1,8 | 3,0 | 1.350 |
| AB315X-2 | 450 | 610 | 2970 | 95,5 | 0,87 | 782 | 1447 | 3,145 | 7,0 | 1,5 | 2,1 | 1.420 |
| AB355-2 | 500 | 680 | 2970 | 96,0 | 0,92 | 817 | 1608 | 4,500 | 6,5 | 1,3 | 2,7 | 1.620 |
| AB355-2 | 560 | 760 | 2970 | 96,0 | 0,92 | 915 | 1801 | 4,980 | 6,5 | 1,3 | 2,7 | 1.750 |
| AB355-2 | 630 | 850 | 2970 | 96,0 | 0,92 | 1029 | 2026 | 5,340 | 6,5 | 1,3 | 2,7 | 1.855 |
| AB355-2 | 710 | 965 | 2970 | 96,0 | 0,92 | 1160 | 2283 | 5,340 | 6,5 | 1,3 | 2,7 | 1.880 |

# AB-series

Three-phase motors with squirrel cage, protection degree IP23

**4 POLES-1500 Rpm**
660-725/380-420 V Y/Δ 50 Hz
Insulation class F

| TYPE | Power | | Speed | Efficiency | Power factor | Rated current (400V) | Nominal Torque | Moment of inertia GD²/4 | Starting current Ratio | Starting Torque Ratio | Break-down Torque | Net weight |
|---|---|---|---|---|---|---|---|---|---|---|---|---|
| | KW | HP | Rpm | % | συνφ | Amp | Nm | Kgm² | Ip/In | Mp/Mn | Mm/Mn | Kg |
| AB160-4 | 11 | 15 | 1450 | 88,7 | 0,83 | 21,6 | 72 | 0,122 | 6 | 1,8 | 2,3 | 140 |
| AB160-4 | 15 | 20 | 1460 | 89,8 | 0,84 | 28,7 | 96 | 0,128 | 6,5 | 2,0 | 2,5 | 142 |
| AB160-4 | 18,5 | 25 | 1460 | 90,9 | 0,84 | 35 | 121 | 0,130 | 7 | 2,2 | 2,5 | 154 |
| AB180-4 | 22 | 30 | 1460 | 91,2 | 0,88 | 40 | 143 | 0,224 | 7,5 | 2,7 | 3,2 | 206 |
| AB180-4 | 30 | 40 | 1460 | 91,9 | 0,88 | 54 | 194 | 0,266 | 7,5 | 2,7 | 3,2 | 226 |
| AB200-4 | 37 | 50 | 1465 | 91,7 | 0,86 | 68 | 239 | 0,328 | 6,5 | 2,1 | 2,6 | 297 |
| AB200-4 | 45 | 60 | 1465 | 92,0 | 0,86 | 82 | 290 | 0,620 | 6,5 | 2,1 | 2,6 | 311 |
| AB225-4 | 55 | 75 | 1470 | 93,0 | 0,88 | 97 | 355 | 0,945 | 7 | 2,4 | 3,0 | 389 |
| AB250-4 | 75 | 100 | 1475 | 93,1 | 0,88 | 132 | 484 | 1,032 | 7 | 2,4 | 3,0 | 524 |
| AB250-4 | 90 | 125 | 1475 | 93,5 | 0,89 | 156 | 581 | 1,546 | 7,2 | 2,4 | 3,0 | 551 |
| AB280-4 | 110 | 150 | 1475 | 94,4 | 0,90 | 187 | 705 | 1,764 | 7,4 | 2,6 | 3,2 | 735 |
| AB280-4 | 132 | 180 | 1475 | 93,5 | 0,90 | 226 | 846 | 3,212 | 7 | 2,4 | 3,0 | 742 |
| AB315-4 | 160 | 220 | 1480 | 94,8 | 0,87 | 280 | 1026 | 3,074 | 6,2 | 1,7 | 2,5 | 968 |
| AB315-4 | 200 | 270 | 1480 | 95,2 | 0,87 | 349 | 1282 | 3,744 | 6,2 | 1,7 | 2,5 | 1.064 |
| AB315-4 | 250 | 340 | 1480 | 95,3 | 0,88 | 430 | 1602 | 4,481 | 6,2 | 1,7 | 2,5 | 1.165 |
| AB315-4 | 315 | 430 | 1480 | 95,9 | 0,88 | 539 | 2019 | 5,126 | 6,5 | 1,8 | 2,6 | 1.364 |
| AB315-4 | 355 | 480 | 1480 | 96,0 | 0,87 | 614 | 2275 | 6,090 | 7 | 1,9 | 2,8 | 1.498 |
| AB315X-4 | 400 | 540 | 1480 | 94,5 | 0,86 | 710 | 2564 | 6,211 | 6,7 | 1,6 | 2,4 | 1.506 |
| AB355-4 | 500 | 680 | 1485 | 95,5 | 0,87 | 868 | 3205 | 9,170 | 6 | 1,4 | 2,3 | 1.790 |
| AB355-4 | 560 | 760 | 1485 | 95,5 | 0,88 | 962 | 3589 | 10,490 | 6 | 1,4 | 2,3 | 1.945 |
| AB355-4 | 630 | 850 | 1485 | 95,0 | 0,88 | 1087 | 4052 | 12,080 | 6,5 | 1,6 | 2,5 | 2.095 |
| AB355-4 | 710 | 965 | 1485 | 96,0 | 0,88 | 1213 | 4551 | 13,000 | 6,5 | 1,6 | 2,5 | 2.200 |

# AB-series

Three-phase motors with squirrel cage, protection degree IP23

**6 POLES-1.000Rpm**
660-725/380-420 V Y/Δ 50 Hz
Insulation class F

| TYPE | Power | | Speed | Efficiency | Power factor | Rated current (400V) | Nominal torque | Moment of inertia GD²/4 | Starting current ratio | Starting torque ratio | Break-down torque | Net weight |
|---|---|---|---|---|---|---|---|---|---|---|---|---|
| | KW | HP | Rpm | % | συνφ | Amp | Nm | Kgm² | Ip/In | Mp/Mn | Mm/Mn | Kg |
| AB160-6 | 11 | 15 | 975 | 88,0 | 0,77 | 23,4 | 108 | 0,162 | 6,0 | 1,8 | 2,5 | 141 |
| AB180-6 | 15 | 20 | 975 | 89,0 | 0,81 | 30 | 148 | 0,231 | 6,0 | 2,3 | 2,8 | 198 |
| AB180-6 | 18,5 | 25 | 975 | 90,0 | 0,82 | 36 | 182 | 0,256 | 6,0 | 2,3 | 2,8 | 212 |
| AB200-6 | 22 | 30 | 980 | 90,7 | 0,82 | 43 | 217 | 0,342 | 6,5 | 2,1 | 2,7 | 262 |
| AB200-6 | 30 | 40 | 980 | 91,2 | 0,82 | 58 | 292 | 0,402 | 6,5 | 2,1 | 2,7 | 279 |
| AB225-6 | 37 | 50 | 980 | 91,6 | 0,86 | 68 | 361 | 0,632 | 6,5 | 2,1 | 2,7 | 343 |
| AB250-6 | 45 | 60 | 985 | 91,6 | 0,84 | 84 | 439 | 0,834 | 6,5 | 2,2 | 2,8 | 473 |
| AB250-6 | 55 | 75 | 985 | 91,8 | 0,84 | 103 | 536 | 0,894 | 6,5 | 2,2 | 2,8 | 490 |
| AB280-6 | 75 | 100 | 985 | 93,0 | 0,83 | 140 | 723 | 1,421 | 6,0 | 2,0 | 2,5 | 675 |
| AB280-6 | 90 | 125 | 985 | 93,6 | 0,84 | 165 | 868 | 1,853 | 6,0 | 2,0 | 2,5 | 745 |
| AB315-6 | 110 | 150 | 988 | 94,2 | 0,82 | 206 | 1061 | 3,378 | 5,5 | 1,6 | 2,4 | 925 |
| AB315-6 | 132 | 180 | 988 | 94,6 | 0,82 | 246 | 1273 | 3,961 | 5,5 | 1,7 | 2,4 | 965 |
| AB315-6 | 160 | 220 | 988 | 95,0 | 0,81 | 300 | 1543 | 4,804 | 6,0 | 1,8 | 2,5 | 1.083 |
| AB315-6 | 200 | 270 | 988 | 95,0 | 0,83 | 366 | 1929 | 5,727 | 6,0 | 1,8 | 2,5 | 1.165 |
| AB315-6 | 250 | 340 | 988 | 95,2 | 0,83 | 457 | 2412 | 7,022 | 6,0 | 1,9 | 2,5 | 1.371 |
| AB355-6 | 315 | 430 | 988 | 94,5 | 0,82 | 587 | 3039 | 7,910 | 5,0 | 1,5 | 1,9 | 1.620 |
| AB355-6 | 355 | 480 | 988 | 95,0 | 0,82 | 658 | 3424 | 9,330 | 5,3 | 1,6 | 2,0 | 1.730 |
| AB355-6 | 400 | 540 | 988 | 95,0 | 0,82 | 741 | 3859 | 9,330 | 5,5 | 1,6 | 2,0 | 1.770 |
| AB355-6 | 450 | 610 | 988 | 95,0 | 0,82 | 834 | 4341 | 10,740 | 5,5 | 1,6 | 2,0 | 1.925 |
| AB355-6 | 500 | 680 | 988 | 95,5 | 0,82 | 922 | 4823 | 12,250 | 6,0 | 1,7 | 2,2 | 2.075 |

# AB-series

Three-phase motors with squirrel cage, protection degree IP23

**8 POLES-750Rpm**
660-725/380-420 V Y/Δ 50 Hz
Insulation class F

| TYPE | Power | | Speed | Efficiency | Power factor | Rated current (400V) | Nominal torque | Moment of inertia GD²/4 | Starting current Ratio | Starting Torque Ratio | Break-down Torque | Net weight |
|---|---|---|---|---|---|---|---|---|---|---|---|---|
| | KW | HP | Rpm | % | συνφ | Amp | Nm | Kgm² | Ip/In | Mp/Mn | Mm/Mn | Kg |
| AB180-8 | 11 | 15 | 715 | 84,0 | 0,76 | 25 | 144 | 0,220 | 4,5 | 1,8 | 2,1 | 185 |
| AB180-8 | 15 | 20 | 715 | 84,5 | 0,77 | 33 | 196 | 0,260 | 4,5 | 1,8 | 2,1 | 200 |
| AB200-8 | 18,5 | 25 | 720 | 84,5 | 0,77 | 41 | 242 | 0,340 | 4,5 | 1,8 | 2,1 | 240 |
| AB200-8 | 22 | 30 | 720 | 86,0 | 0,77 | 48 | 284 | 0,370 | 4,5 | 1,8 | 2,1 | 25 |
| AB225-8 | 30 | 40 | 725 | 88,0 | 0,77 | 64 | 387 | 0,640 | 4,8 | 1,8 | 2,2 | 355 |
| AB250-8 | 37 | 50 | 730 | 88,0 | 0,77 | 79 | 478 | 0,850 | 4,8 | 1,8 | 2,2 | 420 |
| AB250-8 | 45 | 60 | 730 | 88,0 | 0,77 | 96 | 581 | 0,920 | 4,8 | 1,8 | 2,2 | 440 |
| AB280-8 | 55 | 75 | 730 | 90,5 | 0,77 | 114 | 710 | 1,800 | 5,5 | 2,0 | 2,5 | 645 |
| AB280-8 | 75 | 100 | 730 | 90,5 | 0,77 | 155 | 968 | 1,850 | 5,5 | 2,0 | 2,5 | 650 |
| AB315-8 | 90 | 125 | 735 | 92,0 | 0,79 | 179 | 1161 | 3,956 | 6,0 | 1,7 | 3,0 | 870 |
| AB315-8 | 110 | 150 | 735 | 92,5 | 0,80 | 215 | 1420 | 5,125 | 6,0 | 1,7 | 3,0 | 955 |
| AB315-8 | 132 | 180 | 735 | 92,5 | 0,80 | 257 | 1704 | 5,983 | 6,0 | 1,7 | 3,0 | 970 |
| AB315-8 | 160 | 220 | 735 | 93,5 | 0,83 | 298 | 2065 | 6,865 | 5,8 | 1,3 | 2,3 | 1.060 |
| AB315-8 | 200 | 270 | 735 | 93,0 | 0,82 | 379 | 2581 | 7,895 | 5,5 | 1,2 | 2,2 | 1.110 |
| AB355-8 | 250 | 340 | 742 | 94,0 | 0,77 | 499 | 3226 | 9,540 | 5,0 | 1,4 | 2,0 | 1.760 |
| AB355-8 | 315 | 430 | 742 | 94,5 | 0,79 | 609 | 4065 | 12,510 | 5,0 | 1,4 | 2,0 | 2.080 |

# AB-series

Dimension sheet

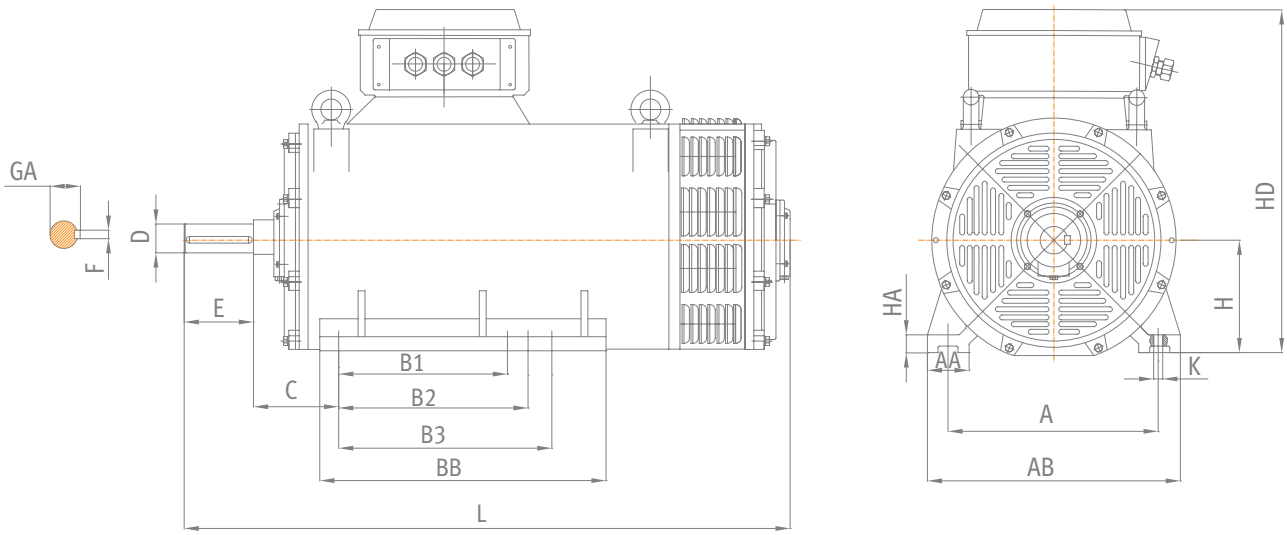


## MOUNTING B3

SIZE 160 - 355

| TYPE | H | A | B1 | B2 | B3 | C | AA | AB | BB | AC | HD | HA | K | D | E | F | GA | DB | L |
|---|---|---|---|---|---|---|---|---|---|---|---|---|---|---|---|---|---|---|---|
| AB160 | 160 | 254 | 210 | 254 | – | 108 | 45 | 294 | 306 | 305 | 440 | 24 | 14 | 48 | 110 | 14 | 51,5 | M16 | 645 |
| AB180 | 180 | 279 | 241 | 279 | – | 121 | 65 | 350 | 335 | 380 | 490 | 30 | 15 | 55 | 110 | 16 | 59 | M20 | 760 |
| AB200 | 200 | 318 | 267 | 305 | – | 133 | 70 | 392 | 375 | 445 | 550 | 30 | 19 | 60 | 140 | 18 | 64 | M20 | 800 |
| AB225-2 | 225 | 356 | 311 | – | – | 149 | 75 | 445 | 390 | 475 | 630 | 35 | 19 | 60 | 140 | 18 | 64 | M20 | 890 |
| AB225-4-6-8 | | | | | | | | | | | | | | 65 | | | 69 | M20 | |
| AB250-2 | 250 | 406 | 311 | 349 | – | 168 | 85 | 492 | 425 | 520 | 730 | 40 | 24 | 65 | 140 | 18 | 69 | M20 | 960 |
| AB250-4-6-8 | | | | | | | | | | | | | | 75 | | 20 | 79,5 | M20 | |
| AB280-2 | 280 | 457 | 368 | 419 | – | 190 | 95 | 555 | 490 | 585 | 785 | 45 | 24 | 65 | 140 | 18 | 69 | M20 | 1056 |
| AB280-4-6-8 | | | | | | | | | | | | | | 80 | 170 | 22 | 85 | M20 | 1086 |
| AB315- 2 | 315 | 508 | 406 | 457 | 508 | 216 | 112 | 620 | 615 | 665 | 950 | 50 | 28 | 70 | 140 | 20 | 74,5 | M20 | 1260 |
| AB315-4-6-8 | | | | | | | | | | | | | | 90 | 170 | 25 | 95 | M24 | 1295 |
| AB315X-2 | | | 457 | 508 | 560 | | | | 705 | | | | | 80 | 140 | 22 | 85 | M20 | 1455 |
| AB315X-4-6-8 | | | | | | | | | | | | | | 90 | 170 | 25 | 95 | M24 | 1490 |
| AB355-2 | 355 | 610 | 500 | 560 | 630 | 254 | 120 | 740 | 850 | 768 | 1090 | 50 | 28 | 80 | 170 | 22 | 85 | M20 | 1760 |
| AB355-4-6-8 | | | | | | | | | | | | | | 100 | 210 | 28 | 106 | M24 | 1800 |

# AB-series
Dimension sheet

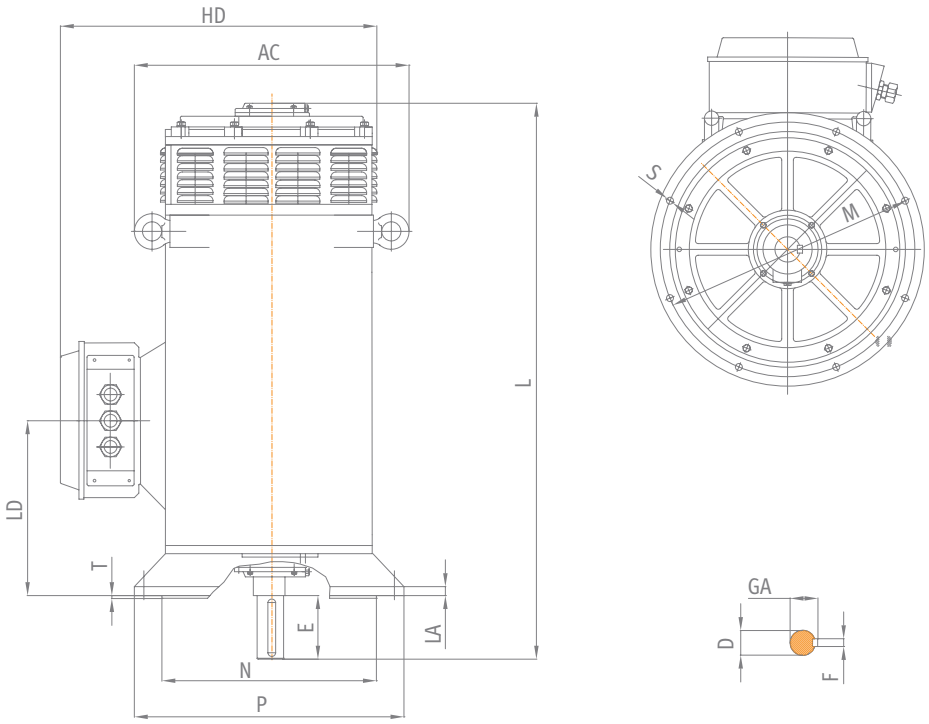


## MOUNTING V1
SIZE 160 - 355

| TYPE | P | N | LA | M | T | S | Z | D | E | F | GA | DB | AC | HD | LD | L |
|---|---|---|---|---|---|---|---|---|---|---|---|---|---|---|---|---|
| AB160 | 350 | 250 | 15 | 300 | 5 | 19 | 4 | 48 | 110 | 14 | 51,5 | M16 | 425 | 455 | 191 | 645 |
| AB180 | 400 | 300 | 15 | 350 | 5 | 19 | 4 | 55 | 110 | 16 | 59 | M20 | 488 | 490 | 279 | 760 |
| AB200 | 450 | 350 | 16 | 400 | 5 | 19 | 8 | 60 | 140 | 18 | 64 | M20 | 545 | 540 | 287 | 800 |
| AB225-2 | 550 | 450 | 18 | 500 | 5 | 19 | 8 | 60 | 140 | 18 | 64 | M20 | 615 | 610 | 318 | 890 |
| AB225-4-6-8 | | | | | | | | 65 | | | 69 | | | | | |
| AB250-2 | 660 | 550 | 22 | 600 | 6 | 24 | 8 | 65 | 140 | 18 | 69 | M20 | 665 | 720 | 332 | 960 |
| AB250-4-6-8 | | | | | | | | 75 | | 20 | 79,5 | | | | | |
| AB280-2 | 660 | 550 | 22 | 600 | 6 | 24 | 8 | 65 | 140 | 18 | 69 | M20 | 740 | 765 | 370 | 1056 |
| AB280-4-6-8 | | | | | | | | 80 | 170 | 22 | 85 | | | | | 1086 |
| AB315- 2 | 800 | 680 | 25 | 740 | 6 | 24 | 8 | 70 | 140 | 20 | 74,5 | M20 | 900 | 875 | 473 | 1260 |
| AB315-4-6-8 | | | | | | | | 90 | 170 | 25 | 95 | M24 | | | | 1295 |
| AB315X-2 | | | | | | | | 80 | 140 | 22 | 85 | M20 | | | | 1455 |
| AB315X-4-6-8 | | | | | | | | 90 | 170 | 25 | 95 | M24 | | | | 1490 |
| AB355-2 | 1000 | 880 | 28 | 940 | 6 | 24 | 8 | 80 | 170 | 22 | 85 | M20 | 1000 | 1100 | 566 | 1760 |
| AB355-4-6-8 | | | | | | | | 100 | 210 | 28 | 106 | M24 | | | | 1800 |

# AB-series

## Bearings

| Frame | Drive End | | Non-Drive End | |
|---|---|---|---|---|
| | 2p | 4,6,8p | 2p | 4,6,8p |
| 160 | 6310 C3 | 6310 C3 | 6310 C3 | 6310 C3 |
| 180 | 6312 C3 | 6312 C3 | 6312 C3 | 6312 C3 |
| 200 | 6313 C3 | 6313 C3 | 6313 C3 | 6313 C3 |
| 225 | 6314 C3 | 6314 C3 | 6314 C3 | 6314 C3 |
| 250 | 6314 C3 | 6317 C3 | 6314 C3 | 6317 C3 |
| 280 | 6314 C3 | 6318 C3 | 6314 C3 | 6318 C3 |
| 315 | 6317 C3 | 6319C3or NU319 | 6317 C3 | 6319C3 |
| 355 | 6319 C3 | 6322C3 or NU322 | 6319 C3 | 6322C3 |

# KHV series

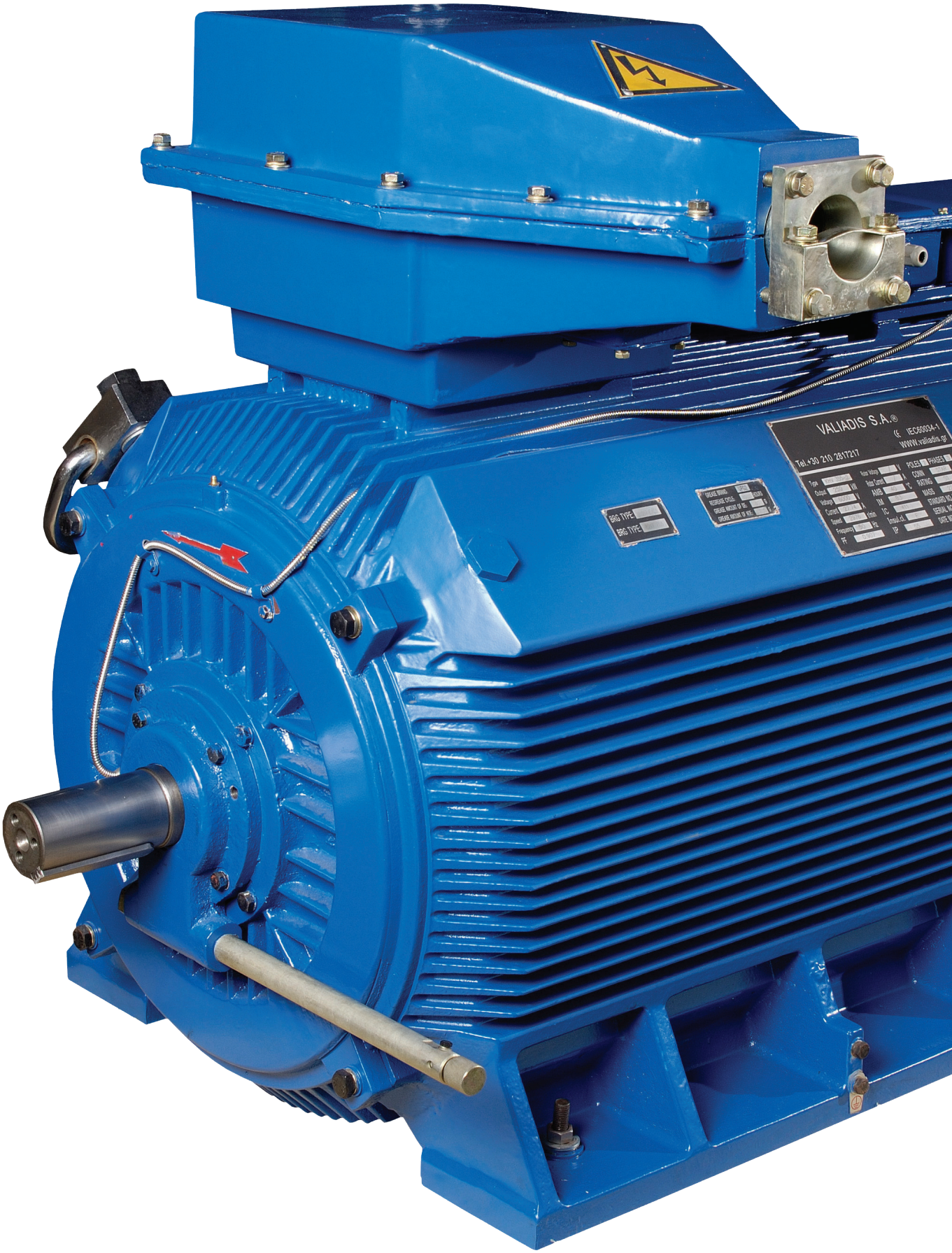
VALIADIS S.A.®
IEC60034-1
www.valiadis.gr
Tel.+30 210 2817217
BRG TYPE
BRG TYPE

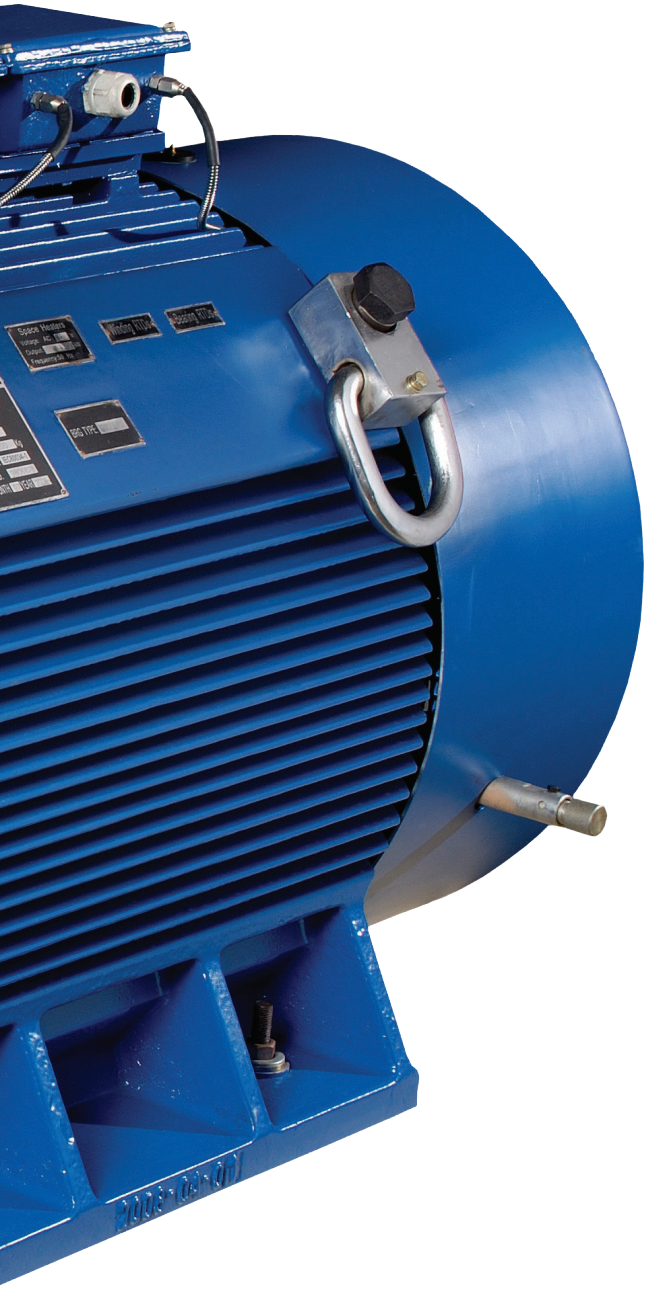

# KHV-series

Technical description
IEC 355-560

## Standard features

- Industrial series of MV motors
- Insulation class F, temperature rise 80°C
- SKF or NSK bearings
- PTC /PT100 protection for the windings
- PT100 protection for the bearings.

## Options

- 10kV windings
- Ask our possibilities for special designs, special dimensions, reverse engineering projects

# KHV-series

Three-phase motors with squirrel cage, protection degree IP55

**2 POLES-3.000 Rpm**
**COOLING: IC 411**
6.000V Y 50 Hz
Insulation class F

| TYPE | Power | Speed | Efficiency | Power factor | Rated current (6000V) | Nominal torque | Moment of inertia GD²/4 | Starting current ratio | Starting torque ratio | Break-down torque | Net weight |
|---|---|---|---|---|---|---|---|---|---|---|---|
| | KW | Rpm | % | συνφ | Amp | Nm | Kgm² | Ip/In | Mp/Mn | Mm/Mn | Kg |
| KHV355-2 | 200 | 2975 | 94,6 | 0,88 | 23,1 | 642 | 2,6 | 6,9 | 1,60 | 2,70 | 1.900 |
| KHV355-2 | 250 | 2975 | 94,9 | 0,88 | 28,8 | 803 | 3,0 | 6,6 | 1,50 | 2,60 | 2.100 |
| KHV400-2 | 315 | 2980 | 94,8 | 0,86 | 37,2 | 1.009 | 4,5 | 6,9 | 1,40 | 3,40 | 2.800 |
| KHV400-2 | 355 | 2980 | 95,2 | 0,88 | 40,8 | 1.138 | 5,0 | 7,0 | 1,50 | 3,60 | 2.900 |
| KHV400-2 | 400 | 2980 | 95,2 | 0,87 | 46,5 | 1.282 | 5,5 | 6,6 | 1,60 | 3,30 | 3.000 |
| KHV400-2 | 450 | 2980 | 95,2 | 0,88 | 52,3 | 1.442 | 6,0 | 6,7 | 1,50 | 3,10 | 3.100 |
| KHV450-2 | 500 | 2980 | 95,3 | 0,87 | 58,0 | 1.602 | 10,0 | 6,9 | 1,20 | 2,90 | 3.400 |
| KHV450-2 | 560 | 2980 | 95,4 | 0,87 | 64,9 | 1.795 | 11,0 | 6,7 | 1,40 | 2,80 | 3.500 |
| KHV450-2 | 630 | 2980 | 95,5 | 0,87 | 73,0 | 2.019 | 12,0 | 6,9 | 1,30 | 2,70 | 3.600 |
| KHV450-2 | 710 | 2980 | 95,7 | 0,87 | 82,1 | 2.275 | 13,0 | 7,0 | 1,10 | 2,60 | 3.700 |
| KHV500-2 | 800 | 2980 | 95,6 | 0,88 | 91,5 | 2.564 | 16,0 | 6,7 | 0,80 | 2,40 | 4.300 |
| KHV500-2 | 900 | 2980 | 95,7 | 0,88 | 102,8 | 2.884 | 17,0 | 6,2 | 0,70 | 2,40 | 4.400 |
| KHV500-2 | 1000 | 2980 | 95,9 | 0,88 | 114,0 | 3.205 | 19,0 | 6,7 | 0,80 | 2,30 | 4.600 |

# KHV-series

Three-phase motors with squirrel cage, protection degree IP55

**4 POLES-1.500 Rpm**
**COOLING: IC 411**
6.000V Y 50 Hz
Insulation class F

| TYPE | Power | Speed | Efficiency | Power factor | Rated current (6000V) | Nominal torque | Moment of inertia GD²/4 | Starting current ratio | Starting torque ratio | Break-down torque | Net weight |
|---|---|---|---|---|---|---|---|---|---|---|---|
| | KW | Rpm | % | συνφ | Amp | Nm | Kgm² | Ip/In | Mp/Mn | Mm/Mn | Kg |
| KHV355-4 | 200 | 1480 | 94,4 | 0,85 | 24,0 | 1.291 | 6,0 | 6,7 | 1,70 | 3,30 | 1.900 |
| KHV355-4 | 250 | 1480 | 94,9 | 0,86 | 29,5 | 1.613 | 8,0 | 6,8 | 1,40 | 3,10 | 2.100 |
| KHV400-4 | 315 | 1485 | 94,9 | 0,88 | 36,3 | 2.026 | 10,0 | 6,2 | 1,20 | 2,70 | 2.900 |
| KHV400-4 | 355 | 1485 | 95,0 | 0,88 | 40,9 | 2.283 | 11,0 | 6,4 | 1,30 | 2,90 | 3.000 |
| KHV400-4 | 400 | 1485 | 95,2 | 0,88 | 45,9 | 2.572 | 12,0 | 6,1 | 1,10 | 2,60 | 3.100 |
| KHV400-4 | 450 | 1485 | 95,3 | 0,88 | 51,6 | 2.894 | 13,0 | 6,0 | 1,00 | 2,40 | 3.200 |
| KHV450-4 | 500 | 1485 | 95,3 | 0,86 | 58,7 | 3.215 | 20,0 | 5,3 | 1,40 | 3,20 | 3.500 |
| KHV450-4 | 560 | 1485 | 95,6 | 0,86 | 65,5 | 3.601 | 22,0 | 5,1 | 1,50 | 2,60 | 3.600 |
| KHV450-4 | 630 | 1485 | 96,0 | 0,86 | 73,4 | 4.052 | 24,0 | 5,8 | 1,50 | 3,10 | 3.700 |
| KHV450-4 | 710 | 1485 | 96,1 | 0,87 | 81,7 | 4.566 | 26,0 | 6,4 | 1,40 | 2,60 | 3.800 |
| KHV500-4 | 800 | 1485 | 95,7 | 0,86 | 93,5 | 5.145 | 38,0 | 5,9 | 1,20 | 2,60 | 4.500 |
| KHV500-4 | 900 | 1485 | 95,8 | 0,86 | 105,1 | 5.788 | 41,0 | 6,2 | 1,10 | 2,50 | 4.700 |
| KHV500-4 | 1000 | 1485 | 95,9 | 0,86 | 116,7 | 6.431 | 44,0 | 5,8 | 1,10 | 2,40 | 5.200 |
| KHV500-4 | 1120 | 1485 | 96,0 | 0,86 | 130,5 | 7.203 | 47,0 | 6,3 | 1,20 | 2,70 | 5.400 |
| KHV560-4 | 1250 | 1490 | 96,1 | 0,87 | 143,9 | 8.012 | 65,0 | 6,3 | 0,90 | 2,10 | 5.600 |
| KHV560-4 | 1400 | 1490 | 96,2 | 0,87 | 161,0 | 8.973 | 70,0 | 6,4 | 1,00 | 2,30 | 5.900 |
| KHV560-4 | 1600 | 1490 | 96,4 | 0,87 | 183,6 | 10.832 | 75,0 | 6,1 | 1,00 | 2,30 | 6.400 |

# KHV-series

Three-phase motors with squirrel cage, protection degree IP55

**6 POLES-1.000 Rpm**
**COOLING: IC 411**
6.000V Y 50 Hz
Insulation class F

| TYPE | Power | Speed | Efficiency | Power factor | Rated current (6000V) | Nominal torque | Moment of irentia GD²/4 | Starting current ratio | Starting torque ratio | Break-down torque | Net weight |
|---|---|---|---|---|---|---|---|---|---|---|---|
| | KW | Rpm | % | συνφ | Amp | Nm | Kgm² | Ip/In | Mp/Mn | Mm/Mn | Kg |
| KHV355-6 | 200 | 985 | 94,3 | 0,82 | 24,9 | 1.939 | 10,0 | 5,5 | 1,20 | 2,60 | 2.300 |
| KHV400-6 | 250 | 990 | 93,9 | 0,84 | 30,5 | 2.412 | 14,0 | 5,6 | 1,10 | 2,50 | 2.900 |
| KHV400-6 | 315 | 990 | 94,3 | 0,84 | 38,3 | 3.039 | 18,0 | 5,9 | 1,20 | 2,60 | 3.200 |
| KHV450-6 | 355 | 985 | 95,0 | 0,84 | 42,8 | 3.442 | 26,0 | 5,7 | 0,90 | 2,40 | 3.400 |
| KHV450-6 | 400 | 985 | 95,3 | 0,85 | 47,5 | 3.878 | 28,0 | 5,6 | 0,80 | 2,30 | 3.500 |
| KHV450-6 | 450 | 985 | 96,0 | 0,86 | 52,4 | 4.363 | 30,0 | 5,4 | 0,80 | 2,50 | 3.600 |
| KHV450-6 | 500 | 985 | 95,9 | 0,85 | 59,0 | 4.848 | 32,0 | 6,0 | 0,90 | 2,10 | 3.700 |
| KHV500-6 | 560 | 990 | 95,1 | 0,85 | 66,7 | 5.402 | 46,0 | 5,9 | 1,40 | 2,70 | 4.300 |
| KHV500-6 | 630 | 990 | 95,2 | 0,85 | 74,9 | 6.077 | 50,0 | 5,7 | 1,30 | 2,50 | 4.500 |
| KHV500-6 | 710 | 990 | 95,3 | 0,85 | 84,3 | 6.849 | 58,0 | 5,5 | 1,20 | 2,30 | 4.700 |
| KHV500-6 | 800 | 990 | 95,4 | 0,85 | 94,9 | 7.717 | 62,0 | 5,4 | 1,10 | 2,10 | 4.900 |
| KHV560-6 | 900 | 990 | 95,6 | 0,84 | 107,8 | 8.682 | 90,0 | 5,4 | 1,00 | 2,20 | 5.200 |
| KHV560-6 | 1000 | 990 | 95,7 | 0,84 | 119,7 | 9.646 | 96,0 | 5,8 | 1,10 | 2,30 | 5.500 |
| KHV560-6 | 1120 | 990 | 95,8 | 0,84 | 133,9 | 10.804 | 108,0 | 5,7 | 1,10 | 2,40 | 6.000 |
| KHV560-6 | 1250 | 990 | 95,9 | 0,84 | 149,3 | 12.058 | 114,0 | 5,9 | 1,20 | 2,60 | 6.300 |

# KHV-series

Three-phase motors with squirrel cage, protection degree IP55

**8 POLES-750 Rpm**
**COOLING : IC 411**
6.000V Y 50 Hz
Insulation class F

| TYPE | Power | Speed | Efficiency | Power factor | Rated current (6000V) | Nominal torque | Moment of inertia GD²/4 | Starting current ratio | Starting-torque ratio | Break-down torque | Net weight |
|---|---|---|---|---|---|---|---|---|---|---|---|
| | KW | Rpm | % | συνφ | Amp | Nm | Kgm² | Ip/In | Mp/Mn | Mm/Mn | Kg |
| KHV400-8 | 200 | 740 | 93,5 | 0,77 | 26,7 | 2.581 | 16,0 | 5,1 | 1,10 | 2,60 | 3.100 |
| KHV450-8 | 250 | 740 | 93,9 | 0,78 | 32,8 | 3.226 | 26,0 | 5,3 | 1,00 | 2,30 | 3.400 |
| KHV450-8 | 315 | 740 | 94,2 | 0,78 | 41,3 | 4.065 | 30,0 | 5,3 | 0,90 | 2,40 | 3.600 |
| KHV450-8 | 355 | 740 | 94,4 | 0,78 | 46,4 | 4.581 | 32,0 | 5,4 | 1,00 | 2,40 | 3.700 |
| KHV500-8 | 400 | 740 | 94,5 | 0,79 | 51,6 | 5.162 | 50,0 | 4,9 | 1,00 | 2,30 | 4.300 |
| KHV500-8 | 450 | 740 | 94,6 | 0,79 | 57,9 | 5.807 | 54,0 | 4,8 | 0,90 | 2,00 | 4.600 |
| KHV500-8 | 500 | 740 | 94,8 | 0,8 | 63,4 | 6.453 | 58,0 | 5,3 | 1,00 | 2,20 | 4.800 |
| KHV500-8 | 560 | 740 | 94,9 | 0,8 | 71,0 | 7.227 | 62,0 | 5,1 | 1,00 | 2,20 | 4.900 |
| KHV560-8 | 630 | 740 | 95,1 | 0,81 | 78,7 | 8.130 | 90,0 | 4,9 | 0,90 | 2,10 | 5.400 |
| KHV560-8 | 710 | 740 | 95,3 | 0,81 | 88,5 | 9.163 | 102,0 | 4,2 | 1,00 | 2,30 | 5.700 |
| KHV560-8 | 800 | 740 | 95,4 | 0,81 | 99,6 | 10.324 | 108,0 | 5,1 | 1,20 | 2,50 | 6.000 |
| KHV560-8 | 900 | 740 | 95,6 | 0,81 | 111,8 | 11.615 | 114,0 | 4,6 | 1,00 | 2,10 | 6.300 |

# KHV-series

Dimension sheet

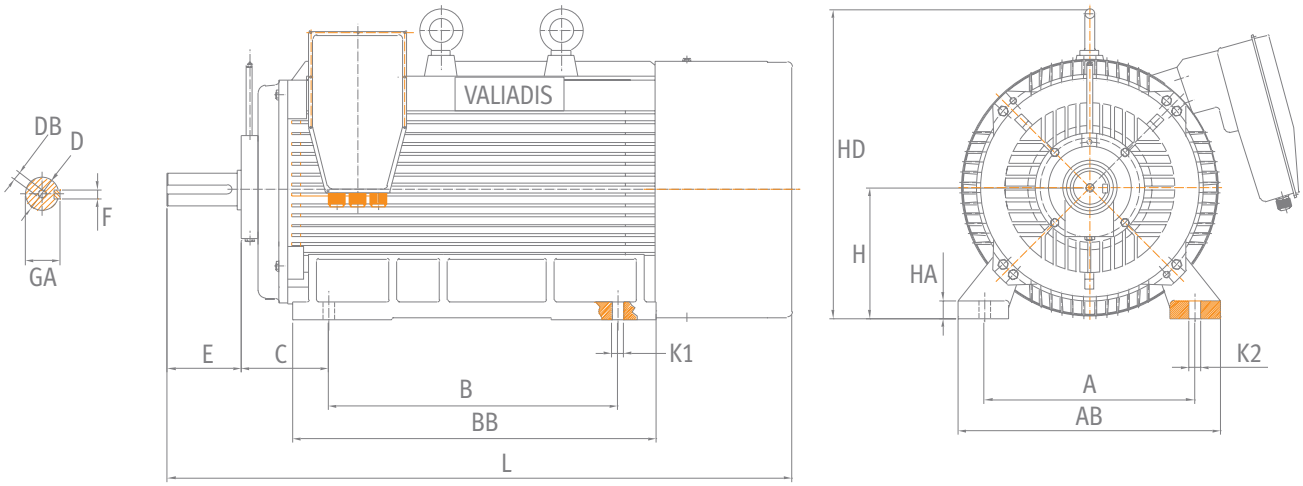


**MOUNTING B3**
**SIZE 355 -560**
6.000V Y 50 Hz
Insulation class F

| TYPE | H | A | B | C | AB | BB | HD | HA | K1 | K2 | D | E | F | GA | DB | L |
|---|---|---|---|---|---|---|---|---|---|---|---|---|---|---|---|---|
| KHV355-2 | 355 | 630 | 900 | 254 | 790 | 1110 | 960 | 50 | 28 | 35 | 75 | 140 | 20 | 79,5 | M20 | 1835 |
| KHV355-4-6-8 | | | | | | | | | | | 100 | 210 | 28 | 106 | M24 | 1905 |
| KHV400-2 | 400 | 710 | 1000 | 280 | 870 | 1200 | 1050 | 50 | 35 | 42 | 85 | 170 | 22 | 90 | M20 | 1950 |
| KHV400-4-6-8 | | | | | | | | | | | 110 | 210 | 28 | 116 | M24 | 1990 |
| KHV450-2 | 450 | 800 | 1120 | 280 | 950 | 1340 | 1150 | 56 | 35 | 42 | 95 | 170 | 25 | 100 | M24 | 2180 |
| KHV450-4-6-8 | | | | | | | | | | | 120 | 210 | 32 | 127 | M24 | 2220 |
| KHV500-2 | 500 | 900 | 1250 | 315 | 1080 | 1490 | 1200 | 65 | 42 | 50 | 110 | 210 | 28 | 116 | M24 | 2400 |
| KHV500-4-6-8 | | | | | | | | | | | 130 | 250 | 32 | 137 | M24 | 2440 |
| KHV560-4-6-8 | 560 | 1000 | 1400 | 355 | 1170 | 1680 | 1480 | 76 | 42 | 50 | 150 | 250 | 36 | 158 | M30 | 2630 |

## BEARINGS

| TYPE | Drive-End | | | Non-Drive End | | |
|---|---|---|---|---|---|---|
| | 2p | 4p | 6, 8p | 2p | 4p | 6, 8p |
| 355 | 6317 C3 | 6322 C3 | 6322 C3 | 6317 C3 | 6322 C3 | 6322 C3 |
| 400 | 6319 C3 | 6326 C3 | 6326 C3 | 6319 C3 | 6326 C3 | 6326 C3 |
| 450 | 6220 C3 | 6328 C3 | 6328 C3 | 6220 C3 | 6328 C3 | 6328 C3 |
| 500 | | 6328 C3 | 6330 C3 | | 6328 C3 | 6330 C3 |
| 560 | | 6334 C3 | 6334 C3 | | 6334 C3 | 6334 C3 |

# TMKHV series

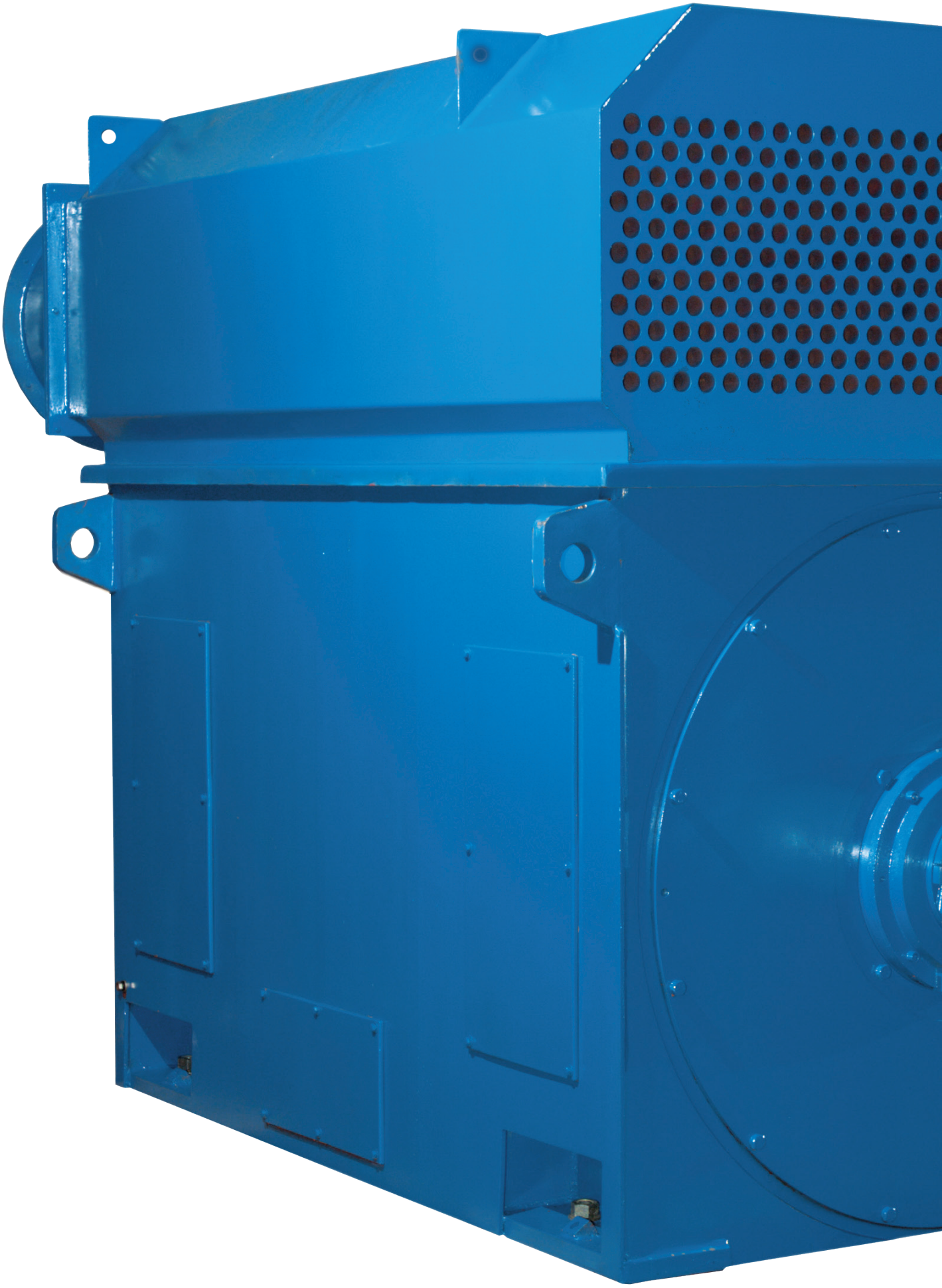

# TMKHV-series

Technical description
IEC 355-630

## Standard features

- Industrial series of MV motors
- Insulation class F, temperature rise 80°C
- SKF or NSK bearings
- PTC /PT100 protection for the windings
- PT100 protection for the bearings
- Top mounted cooler

## Options

- 10kV windings
- Ask our possibilities for special designs, special dimensions, reverse engineering projects

# TMKHV-series

Three-phase motors with squirrel cage, protection degree IP55
with top mounted air to air cooler

**2 POLES-3.000 Rpm, COOLING : IC 611**
6.000V Y 50 Hz,
Insulation class F

| TYPE | Power | Speed | Efficiency | Power factor | Rated current (6000V) | Nominal torque | Moment of inertia GD²/4 | Starting current ratio | Starting torque ratio | Break-down torque | Net weight |
|---|---|---|---|---|---|---|---|---|---|---|---|
| | KW | Rpm | % | συνφ | Amp | Nm | Kgm² | Ip/In | Mp/Mn | Mm/Mn | Kg |
| TMKHV355-2 | 250 | 2975 | 92,9 | 0,88 | 29,4 | 803 | 3,8 | 6,4 | 1,40 | 2,90 | 2.110 |
| TMKHV355-2 | 315 | 2975 | 93,7 | 0,88 | 36,8 | 1.011 | 4,3 | 6,9 | 1,30 | 2,80 | 2.460 |
| TMKHV400-2 | 355 | 2980 | 93,7 | 0,87 | 41,9 | 1.138 | 5,2 | 6,7 | 1,00 | 3,00 | 2.580 |
| TMKHV400-2 | 400 | 2980 | 94,0 | 0,87 | 47,1 | 1.282 | 5,5 | 7,9 | 1,40 | 3,50 | 2.730 |
| TMKHV400-2 | 450 | 2980 | 94,2 | 0,9 | 51,1 | 1.442 | 5,8 | 6,3 | 0,90 | 3,10 | 2.990 |
| TMKHV400-2 | 500 | 2980 | 94,4 | 0,89 | 57,3 | 1.602 | 6,2 | 6,8 | 1,10 | 2,50 | 3.220 |
| TMKHV450-2 | 560 | 2980 | 94,6 | 0,87 | 65,5 | 1.795 | 13,0 | 6,6 | 1,00 | 2,30 | 3.630 |
| TMKHV450-2 | 630 | 2980 | 94,8 | 0,88 | 72,7 | 2.019 | 14,0 | 6,7 | 1,10 | 2,30 | 3.720 |
| TMKHV450-2 | 710 | 2980 | 94,9 | 0,88 | 81,8 | 2.275 | 16,0 | 6,9 | 1,20 | 2,50 | 3.850 |
| TMKHV450-2 | 800 | 2980 | 95,0 | 0,89 | 91,0 | 2.564 | 18,0 | 6,7 | 1,10 | 2,30 | 3.980 |

# TMKHV-series

Three-phase motors with squirrel cage, protection degree IP55
with top mounted air to air cooler

**4 POLES-1.500 Rpm, COOLING: IC 611**
6.000V Y 50 Hz,
Insulation class F

| TYPE | Power | Speed | Efficiency | Power factor | Rated current (6000V) | Nominal torque | Moment of inertia GD²/4 | Starting current ratio | Starting-torque ratio | Break-down torque | Net weight |
|---|---|---|---|---|---|---|---|---|---|---|---|
| | KW | Rpm | % | συνφ | Amp | Nm | Kgm² | Ip/In | Mp/Mn | Mm/Mn | Kg |
| TMKHV355-4 | 200 | 1480 | 93,5 | 0,86 | 23,9 | 1.291 | 4,8 | 7,0 | 1,40 | 3,00 | 2.140 |
| TMKHV355-4 | 250 | 1480 | 94,1 | 0,88 | 29,1 | 1.613 | 5,7 | 7,4 | 1,70 | 3,10 | 2.300 |
| TMKHV400-4 | 315 | 1485 | 93,7 | 0,88 | 36,8 | 2.026 | 12,0 | 7,4 | 0,80 | 3,20 | 2.750 |
| TMKHV400-4 | 355 | 1485 | 94,0 | 0,88 | 41,3 | 2.283 | 13,0 | 6,6 | 1,30 | 2,90 | 2.900 |
| TMKHV400-4 | 400 | 1485 | 94,3 | 0,89 | 45,9 | 2.572 | 14,0 | 5,2 | 1,20 | 2,60 | 2.960 |
| TMKHV400-4 | 450 | 1485 | 94,5 | 0,88 | 52,1 | 2.894 | 16,0 | 5,7 | 1,20 | 2,80 | 3.120 |
| TMKHV450-4 | 500 | 1485 | 94,8 | 0,89 | 57,0 | 3.215 | 16,0 | 6,4 | 1,40 | 3,30 | 3.700 |
| TMKHV450-4 | 560 | 1485 | 94,8 | 0,90 | 63,2 | 3.601 | 17,0 | 6,6 | 1,40 | 2,90 | 3.790 |
| TMKHV450-4 | 630 | 1485 | 94,9 | 0,89 | 71,8 | 4.052 | 19,0 | 6,3 | 1,40 | 2,70 | 3.880 |
| TMKHV450-4 | 710 | 1485 | 95,1 | 0,89 | 80,7 | 4.566 | 20,0 | 6,2 | 1,20 | 2,60 | 4.020 |
| TMKHV500-4 | 800 | 1485 | 95,0 | 0,88 | 92,1 | 5.145 | 29,0 | 6,1 | 1,00 | 2,10 | 4.980 |
| TMKHV500-4 | 900 | 1485 | 95,2 | 0,88 | 103,4 | 5.788 | 32,0 | 6,3 | 1,00 | 2,20 | 5.120 |
| TMKHV500-4 | 1000 | 1485 | 95,4 | 0,88 | 114,6 | 6.431 | 34,0 | 6,4 | 0,90 | 2,00 | 5.340 |
| TMKHV500-4 | 1120 | 1485 | 95,5 | 0,88 | 128,2 | 7.203 | 37,0 | 6,2 | 1,00 | 2,20 | 5.580 |
| TMKHV560-4 | 1250 | 1485 | 95,0 | 0,88 | 143,9 | 8.039 | 55,0 | 6,2 | 0,80 | 2,20 | 8.530 |
| TMKHV560-4 | 1400 | 1485 | 95,3 | 0,88 | 160,6 | 9.003 | 60,0 | 6,4 | 0,80 | 2,10 | 8.780 |
| TMKHV560-4 | 1600 | 1485 | 95,4 | 0,88 | 183,4 | 10.290 | 65,0 | 6,0 | 0,90 | 2,20 | 9.120 |
| TMKHV630-4 | 1800 | 1485 | 95,5 | 0,88 | 206,1 | 11.576 | 126,0 | 5,9 | 0,80 | 2,00 | 9.140 |
| TMKHV630-4 | 2000 | 1485 | 95,6 | 0,88 | 228,8 | 12.862 | 140,0 | 5,7 | 0,80 | 1,90 | 9.410 |
| TMKHV630-4 | 2240 | 1485 | 95,7 | 0,88 | 255,9 | 14.405 | 156,0 | 5,2 | 0,80 | 2,10 | 9.650 |

# TMKHV-series

Three-phase motors with squirrel cage, protection degree IP55
with top mounted air to air cooler

**6 POLES-1.000 Rpm, COOLING: IC 611**
6.000V Y 50 Hz,
Insulation class F

| TYPE | Power | Speed | Efficiency | Power factor | Rated current (6000V) | Nominal torque | Moment of inertia GD²/4 | Starting current ratio | Starting torque ratio | Break-down torque | Net weight |
|---|---|---|---|---|---|---|---|---|---|---|---|
| | KW | Rpm | % | συνφ | Amp | Nm | Kgm² | Ip/In | Mp/Mn | Mm/Mn | Kg |
| TMKHV355-6 | 200 | 985 | 92,9 | 0,83 | 25,0 | 1.939 | 9,5 | 5,5 | 1,20 | 2,40 | 2.270 |
| TMKHV400-6 | 250 | 990 | 94,0 | 0,83 | 30,9 | 2.412 | 16,0 | 6,5 | 1,20 | 3,00 | 3.350 |
| TMKHV400-6 | 315 | 990 | 94,1 | 0,85 | 37,9 | 3.039 | 17,0 | 5,6 | 1,10 | 2,10 | 3.630 |
| TMKHV450-6 | 355 | 985 | 94,0 | 0,85 | 42,8 | 3.442 | 24,0 | 5,4 | 1,00 | 2,30 | 3.900 |
| TMKHV450-6 | 400 | 985 | 94,3 | 0,86 | 47,5 | 3.878 | 25,0 | 5,6 | 1,10 | 2,60 | 4.200 |
| TMKHV450-6 | 450 | 985 | 94,5 | 0,86 | 53,3 | 4.363 | 26,0 | 5,7 | 1,20 | 2,60 | 4.300 |
| TMKHV450-6 | 500 | 985 | 94,7 | 0,87 | 58,4 | 4.848 | 28,0 | 5,9 | 1,30 | 2,70 | 4.530 |
| TMKHV500-6 | 560 | 990 | 94,6 | 0,86 | 66,2 | 5.402 | 42,0 | 5,4 | 1,00 | 2,70 | 4.580 |
| TMKHV500-6 | 630 | 990 | 94,8 | 0,85 | 75,2 | 6.077 | 45,0 | 5,7 | 1,00 | 2,30 | 4.600 |
| TMKHV500-6 | 710 | 990 | 95,0 | 0,85 | 84,6 | 6.849 | 47,0 | 5,2 | 1,00 | 2,10 | 4.680 |
| TMKHV500-6 | 800 | 990 | 95,2 | 0,85 | 95,1 | 7.717 | 50,0 | 5,5 | 1,00 | 2,10 | 4.870 |
| TMKHV560-6 | 900 | 990 | 95,0 | 0,85 | 107,3 | 8.682 | 74,0 | 6,3 | 0,80 | 2,00 | 8.790 |
| TMKHV560-6 | 1000 | 990 | 95,1 | 0,85 | 119,0 | 9.646 | 79,0 | 5,9 | 0,80 | 2,00 | 9.020 |
| TMKHV560-6 | 1120 | 990 | 95,2 | 0,85 | 133,2 | 10.804 | 85,0 | 6,0 | 0,80 | 2,20 | 9.310 |
| TMKHV630-6 | 1250 | 990 | 95,3 | 0,86 | 146,8 | 12.058 | 140,0 | 5,1 | 0,90 | 1,90 | 9.100 |
| TMKHV630-6 | 1400 | 990 | 95,4 | 0,86 | 164,2 | 13.505 | 151,0 | 5,3 | 1,00 | 2,00 | 9.530 |
| TMKHV630-6 | 1600 | 990 | 95,5 | 0,86 | 187,5 | 15.434 | 164,0 | 5,4 | 1,00 | 2,00 | 9.870 |

# TMKHV-series

Three-phase motors with squirrel cage, protection degree IP55
with top mounted air to air cooler

**8 POLES-750 Rpm, COOLING: IC 611**
6.000V Y 50 Hz,
Insulation class F

| TYPE | Power | Speed | Efficiency | Power factor | Rated current (6000V) | Nominal torque | Moment of inertia GD²/4 | Starting current ratio | Starting torque ratio | Break-down torque | Net weight |
|---|---|---|---|---|---|---|---|---|---|---|---|
| | KW | Rpm | % | συνφ | Amp | Nm | Kgm² | Ip/In | Mp/Mn | Mm/Mn | Kg |
| TMKHV400-8 | 200 | 740 | 93,0 | 0,78 | 26,5 | 2.581 | 20,0 | 5,3 | 1,20 | 2,30 | 3.340 |
| TMKHV450-8 | 250 | 740 | 93,2 | 0,79 | 32,7 | 3.226 | 25,0 | 5,4 | 1,10 | 2,50 | 3.890 |
| TMKHV450-8 | 315 | 740 | 93,7 | 0,80 | 40,4 | 4.065 | 29,0 | 5,4 | 1,10 | 2,40 | 4.340 |
| TMKHV450-8 | 355 | 740 | 94,0 | 0,81 | 44,9 | 4.581 | 31,0 | 5,5 | 1,20 | 2,50 | 4.600 |
| TMKHV500-8 | 400 | 740 | 93,9 | 0,83 | 49,4 | 5.162 | 46,0 | 4,9 | 0,90 | 2,20 | 4.470 |
| TMKHV500-8 | 450 | 740 | 94,1 | 0,84 | 54,8 | 5.807 | 50,0 | 4,9 | 0,90 | 2,40 | 4.560 |
| TMKHV500-8 | 500 | 740 | 94,3 | 0,84 | 60,7 | 6.453 | 53,0 | 4,7 | 0,80 | 2,10 | 4.730 |
| TMKHV500-8 | 560 | 740 | 94,5 | 0,84 | 67,9 | 7.227 | 57,0 | 4,9 | 0,90 | 2,40 | 4.920 |
| TMKHV560-8 | 630 | 740 | 94,5 | 0,82 | 78,2 | 8.130 | 88,0 | 5,4 | 0,90 | 2,20 | 8.470 |
| TMKHV560-8 | 710 | 740 | 94,6 | 0,82 | 88,1 | 9.163 | 94,0 | 5,2 | 0,80 | 2,10 | 8.610 |
| TMKHV560-8 | 800 | 740 | 94,9 | 0,82 | 98,9 | 10.324 | 100,0 | 5,6 | 0,90 | 2,20 | 8.950 |
| TMKHV630-8 | 900 | 740 | 94,8 | 0,84 | 108,8 | 11.615 | 152,0 | 4,9 | 0,90 | 2,00 | 8.800 |
| TMKHV630-8 | 1000 | 740 | 94,9 | 0,84 | 120,7 | 12.905 | 163,0 | 5,1 | 1,00 | 2,10 | 9.130 |
| TMKHV630-8 | 1120 | 740 | 95,0 | 0,84 | 135,1 | 14.454 | 175,0 | 4,8 | 0,90 | 2,00 | 9.450 |
| TMKHV630-8 | 1250 | 740 | 95,1 | 0,84 | 150,6 | 16.132 | 188,0 | 4,9 | 0,80 | 1,90 | 9.900 |

# TMKHV-series

Dimension sheet

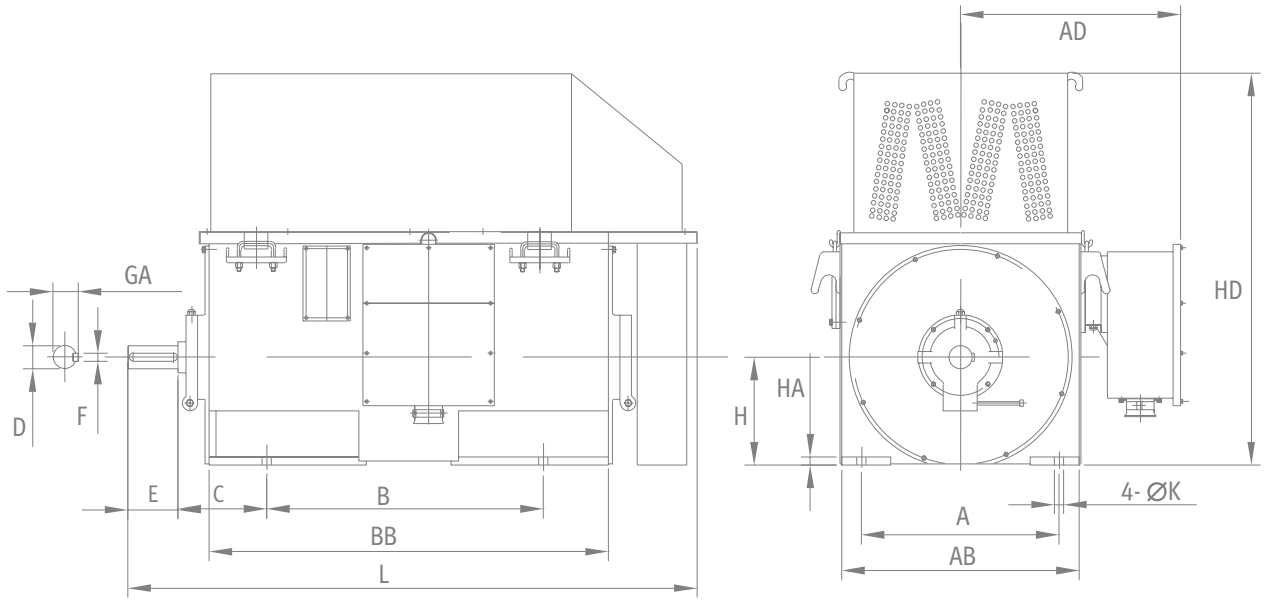


## MOUNTING B3

SIZE 355-630

| TYPE | H | A | B | C | AB | BB | HD | HA | K | D | E | F | GA | DB | L |
|---|---|---|---|---|---|---|---|---|---|---|---|---|---|---|---|
| TMKHV355-2 | 355 | 630 | 900 | 315 | 780 | 1350 | 1300 | 25 | 28 | 80 | 170 | 22 | 85 | M20 | 2150 |
| TMKHV355-4-6-8 | | | | | | | | | | 100 | 210 | 28 | 106 | M24 | 2200 |
| TMKHV400-2 | 400 | 710 | 1000 | 375 | 900 | 1510 | 1550 | 26 | 35 | 90 | 170 | 25 | 100 | M24 | 2040 |
| TMKHV400-4-6-8 | | | | | | | | | | 110 | 210 | 28 | 116 | M24 | 2080 |
| TMKHV450-2 | 450 | 800 | 1120 | 355 | 980 | 1640 | 1650 | 28 | 35 | 100 | 210 | 28 | 106 | M24 | 2280 |
| TMKHV450-4 | | | | | | | | | | 120 | | 32 | 127 | M24 | 2350 |
| TMKHV450-6-8 | | | | | | | | | | 130 | 250 | | 137 | M24 | 2460 |
| TMKHV500-4 | 500 | 900 | 1250 | 475 | 1112 | 1900 | 1900 | 28 | 42 | 130 | 250 | 32 | 137 | M24 | 2720 |
| TMKHV500-6-8 | | | | | | | | | | 140 | | 36 | 148 | M30 | |
| TMKHV560-4 | 560 | 1000 | 1400 | 500 | 1220 | 1938 | 2250 | 45 | 42 | 150 | 250 | 36 | 158 | M24 | 2910 |
| TMKHV560-6-8 | | | | | | | | | | 160 | 300 | 40 | 168 | M30 | 2960 |
| TMKHV630-4 | 630 | 1120 | 1600 | 530 | 1410 | 2140 | 2530 | 50 | 48 | 170 | 300 | 40 | 178 | M30 | 3150 |
| TMKHV630-6-8 | | | | | | | | | | 180 | | 45 | 188 | M30 | |

## BEARINGS

| TYPE | Drive-End | | | Non-Drive End | | |
|---|---|---|---|---|---|---|
| | 2p | 4p | 6, 8p | 2p | 4p | 6, 8p |
| 355 | 6317 C3 | 6322 C3 | 6322 C3 | 6317 C3 | 6322 C3 | 6322 C3 |
| 400 | 6319 C3 | 6324 C3 | 6324 C3 | 6319 C3 | 6324 C3 | 6324 C3 |
| 450 | 6220 C3 | 6326 C3 | 6328 C3 | 6220 C3 | 6326 C3 | 6328 C3 |
| 500 | | 6330 C3 | 6330 C3 | | 6328 C3 | 6328 C3 |
| 560 | | NU 334 | NU 334 | | 6334 C3 | 6334 C3 |
| 630 | | NU 338 | NU 338 | | 6338 C3 | 6338 C3 |

# AHV series

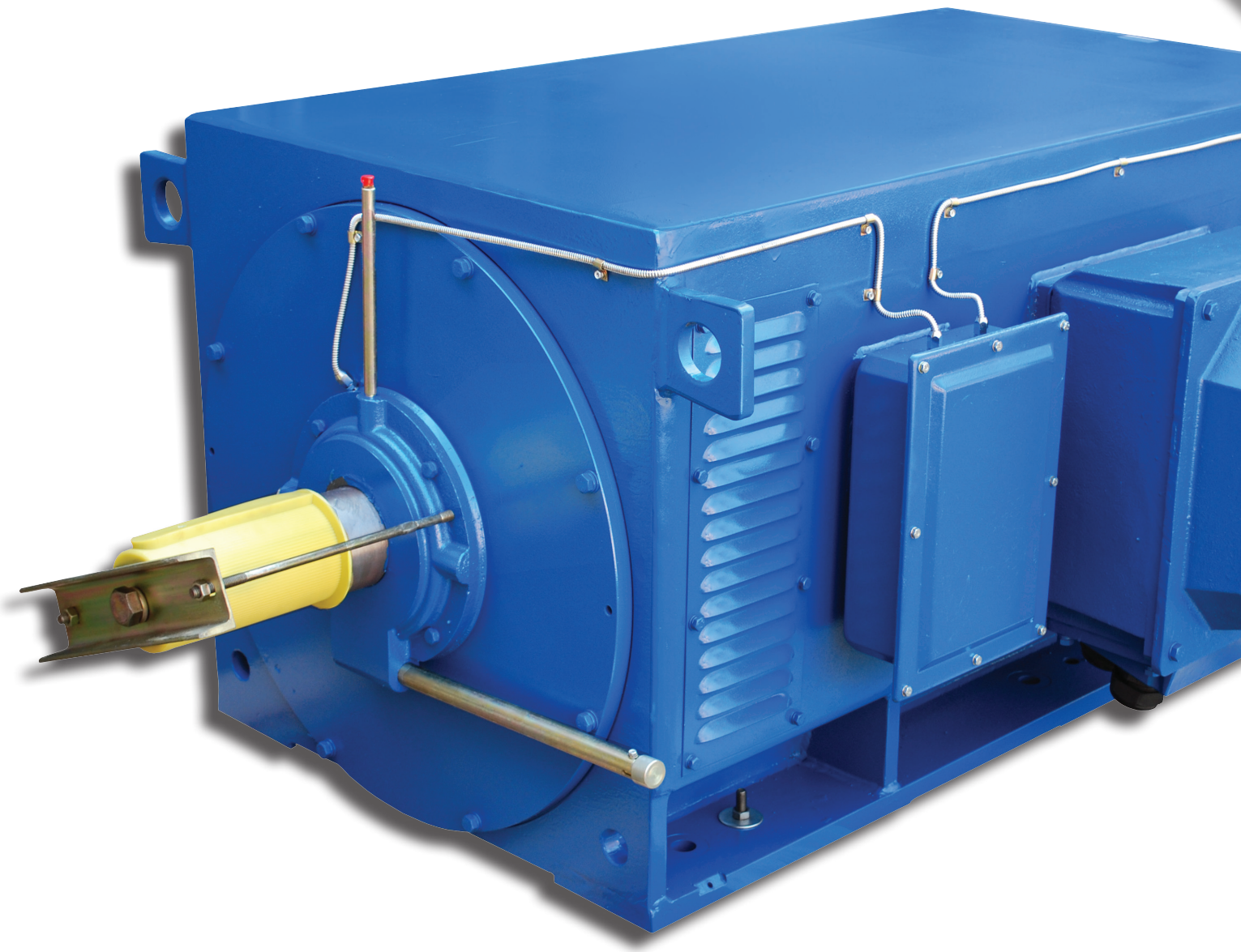

# AHV-series

Technical description
IEC 355-630

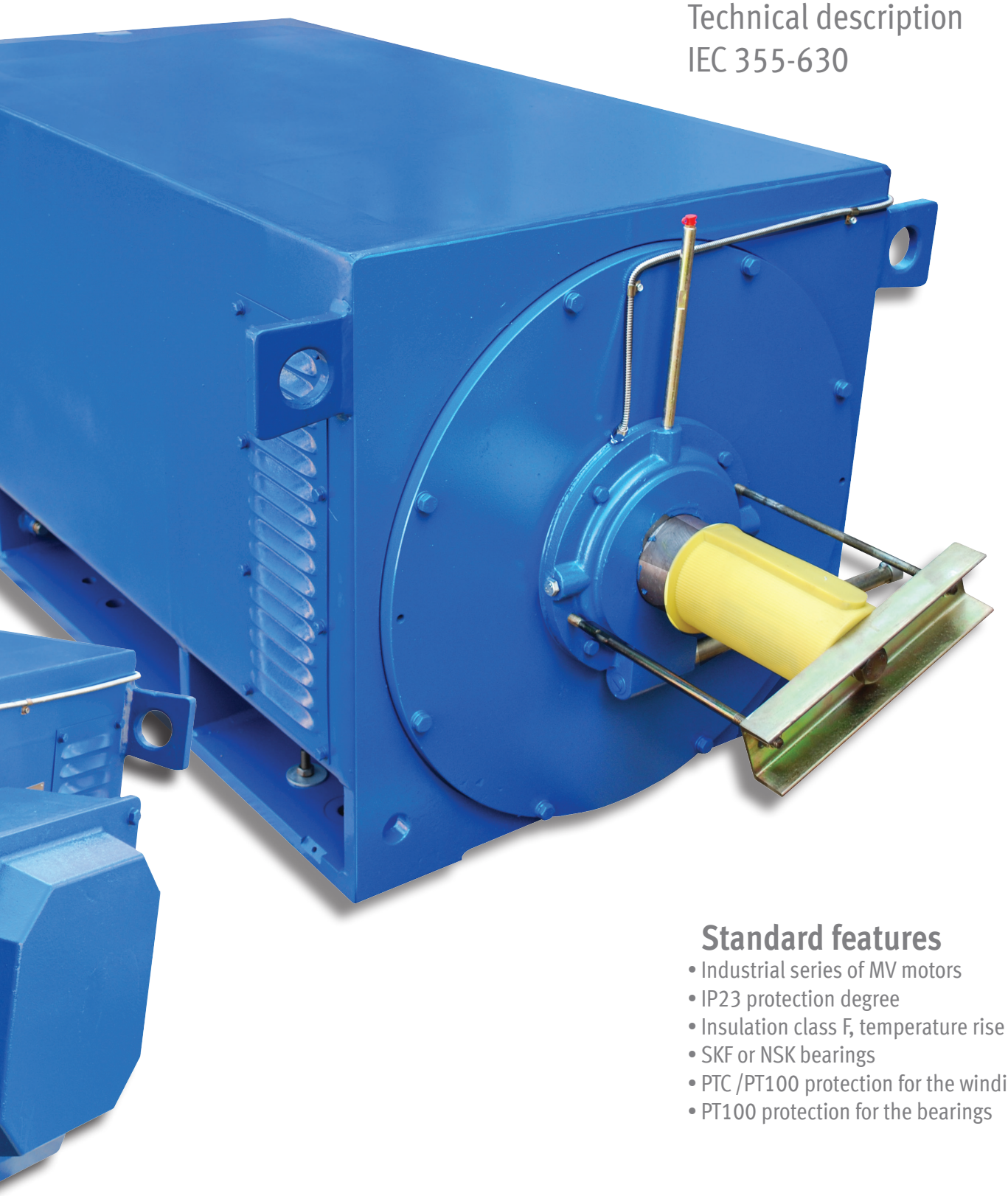

## Standard features

- Industrial series of MV motors
- IP23 protection degree
- Insulation class F, temperature rise 80oC
- SKF or NSK bearings
- PTC /PT100 protection for the windings
- PT100 protection for the bearings

## Options

- 10kV windings
- Ask our possibilities for special designs, special dimensions, reverse engineering projects

# AHV-series

Three-phase motors with squirrel cage, protection degree IP23

**2 POLES-3.000 Rpm**
**COOLING: IC 01**
6.000V Y 50 Hz
Insulation class F

| TYPE | Power | Speed | Efficiency | Power factor | Rated current (6000V) | Nominal torque | Moment of inertia GD²/4 | Starting current ratio | Starting torque ratio | Break-down torque | Net weight |
|---|---|---|---|---|---|---|---|---|---|---|---|
| | KW | Rpm | % | συνφ | Amp | Nm | Kgm² | Ip/In | Mp/Mn | Mm/Mn | Kg |
| AHV355-2 | 250 | 2975 | 93,4 | 0,88 | 29,3 | 803 | 3,2 | 6,8 | 1,20 | 3,30 | 2.020 |
| AHV355-2 | 315 | 2975 | 94,6 | 0,88 | 36,4 | 1.011 | 3,5 | 6,7 | 1,40 | 3,20 | 2.370 |
| AHV355-2 | 355 | 2975 | 94,5 | 0,89 | 40,6 | 1.140 | 3,8 | 6,8 | 1,30 | 3,30 | 2.480 |
| AHV355-2 | 400 | 2975 | 94,5 | 0,89 | 45,8 | 1.284 | 4,0 | 7,0 | 1,30 | 2,90 | 2.700 |
| AHV400-2 | 450 | 2980 | 95,2 | 0,87 | 52,3 | 1.442 | 5,0 | 7,3 | 1,30 | 3,10 | 2.520 |
| AHV400-2 | 500 | 2980 | 95,3 | 0,88 | 57,4 | 1.602 | 5,1 | 7,7 | 1,40 | 3,30 | 2.630 |
| AHV400-2 | 560 | 2980 | 95,4 | 0,89 | 63,5 | 1.795 | 5,2 | 7,6 | 1,40 | 3,20 | 2.750 |
| AHV400-2 | 630 | 2980 | 95,5 | 0,88 | 72,1 | 2.019 | 5,5 | 7,2 | 1,20 | 3,00 | 2.880 |
| AHV450-2 | 710 | 2980 | 95,0 | 0,89 | 80,8 | 2.275 | 11,0 | 6,7 | 1,20 | 3,10 | 3.040 |
| AHV450-2 | 800 | 2980 | 95,2 | 0,89 | 90,9 | 2.564 | 12,0 | 7,9 | 1,50 | 3,30 | 3.160 |
| AHV450-2 | 900 | 2980 | 95,3 | 0,89 | 102,1 | 2.884 | 13,0 | 7,2 | 1,40 | 3,20 | 3.310 |

# AHV-series

Three-phase motors with squirrel cage, protection degree IP23

**4 POLES-1.500 Rpm,**
**COOLING: IC 01**
6.000V Y 50 Hz
Insulation class F

| TYPE | Power | Speed | Efficiency | Power factor | Rated current (6000V) | Nominal torque | Moment of inertia GD²/4 | Starting current ratio | Starting torque ratio | Break-down torque | Net weight |
|---|---|---|---|---|---|---|---|---|---|---|---|
| | KW | Rpm | % | συνφ | Amp | Nm | Kgm² | Ip/In | Mp/Mn | Mm/Mn | Kg |
| AHV355-4 | 200 | 1485 | 93,5 | 0,86 | 23,9 | 1.286 | 4,7 | 6,8 | 1,20 | 2,80 | 1.560 |
| AHV355-4 | 250 | 1485 | 94,4 | 0,88 | 29,0 | 1.608 | 5,0 | 7,3 | 1,20 | 3,20 | 1.780 |
| AHV355-4 | 315 | 1485 | 94,9 | 0,89 | 35,9 | 2.026 | 6,7 | 6,1 | 1,10 | 2,80 | 2.070 |
| AHV400-4 | 355 | 1485 | 94,4 | 0,89 | 40,7 | 2.283 | 12,0 | 7,6 | 0,90 | 2,80 | 2.480 |
| AHV400-4 | 400 | 1485 | 94,6 | 0,89 | 45,7 | 2.572 | 13,0 | 6,3 | 1,00 | 3,00 | 2.550 |
| AHV400-4 | 450 | 1485 | 95,2 | 0,89 | 51,1 | 2.894 | 14,0 | 7,5 | 1,50 | 2,80 | 2.720 |
| AHV400-4 | 500 | 1485 | 95,4 | 0,9 | 56,0 | 3.215 | 15,0 | 7,2 | 1,20 | 2,80 | 2.790 |
| AHV400-4 | 560 | 1485 | 95,6 | 0,89 | 63,3 | 3.601 | 17,0 | 7,3 | 1,30 | 2,70 | 2.930 |
| AHV450-4 | 630 | 1485 | 95,3 | 0,88 | 72,3 | 4.052 | 17,0 | 6,9 | 1,10 | 2,50 | 3.260 |
| AHV450-4 | 710 | 1485 | 95,5 | 0,9 | 79,5 | 4.566 | 19,0 | 7,2 | 1,20 | 2,60 | 3.390 |
| AHV450-4 | 800 | 1485 | 95,7 | 0,9 | 89,4 | 5.145 | 20,0 | 7,0 | 1,10 | 2,60 | 3.490 |
| AHV450-4 | 900 | 1485 | 95,9 | 0,9 | 100,3 | 5.788 | 22,0 | 6,1 | 0,90 | 2,40 | 3.860 |
| AHV500-4 | 1000 | 1485 | 95,4 | 0,87 | 115,9 | 6.431 | 26,0 | 6,3 | 1,10 | 2,30 | 4.290 |
| AHV500-4 | 1120 | 1485 | 95,6 | 0,88 | 128,1 | 7.203 | 29,0 | 6,7 | 1,20 | 2,40 | 4.610 |
| AHV500-4 | 1250 | 1485 | 95,6 | 0,88 | 143,0 | 8.039 | 32,0 | 5,8 | 0,90 | 2,60 | 4.750 |
| AHV500-4 | 1400 | 1485 | 95,7 | 0,88 | 160,0 | 9.003 | 34,0 | 5,9 | 1,00 | 2,70 | 4.930 |
| AHV560-4 | 1600 | 1485 | 96,0 | 0,91 | 176,2 | 10.290 | 52,0 | 6,3 | 0,80 | 2,40 | 5.750 |
| AHV560-4 | 1800 | 1485 | 96,1 | 0,9 | 200,3 | 11.576 | 55,0 | 6,7 | 0,90 | 2,60 | 6.120 |
| AHV560-4 | 2000 | 1485 | 96,2 | 0,9 | 222,3 | 12.862 | 60,0 | 6,2 | 0,80 | 2,40 | 6.350 |
| AHV630-4 | 2240 | 1492 | 96,3 | 0,91 | 246,0 | 14.338 | 107,0 | 6,7 | 0,80 | 2,60 | 7.200 |
| AHV630-4 | 2500 | 1492 | 96,5 | 0,9 | 277,0 | 16.002 | 113,0 | 6,3 | 0,70 | 2,50 | 7.600 |
| AHV630-4 | 2800 | 1493 | 96,8 | 0,91 | 305,9 | 17.910 | 126,0 | 6,0 | 0,70 | 2,50 | 7.910 |

# AHV-series

Three-phase motors with squirrel cage, protection degree IP23

**6 POLES-1.000 Rpm,**
**COOLING: IC 01**
6.000V Y 50 Hz
Insulation class F

| TYPE | Power | Speed | Efficiency | Power factor | Rated current (6000V) | Nominal torque | Moment of inertia GD²/4 | Starting current ratio | Starting torque ratio | Break-down torque | Net weight |
|---|---|---|---|---|---|---|---|---|---|---|---|
| | KW | Rpm | % | συνφ | Amp | Nm | Kgm² | Ip/In | Mp/Mn | Mm/Mn | Kg |
| AHV355-6 | 200 | 980 | 93,5 | 0,83 | 24,8 | 1.949 | 9,3 | 5,9 | 1,10 | 2,70 | 1.860 |
| AHV355-6 | 250 | 980 | 94,0 | 0,84 | 30,5 | 2.436 | 10,0 | 6,2 | 1,20 | 2,80 | 2.070 |
| AHV400-6 | 315 | 985 | 94,2 | 0,85 | 37,9 | 3.054 | 17,0 | 6,0 | 1,20 | 2,70 | 2.810 |
| AHV400-6 | 355 | 985 | 94,4 | 0,85 | 42,6 | 3.442 | 18,0 | 5,7 | 1,10 | 2,60 | 2.880 |
| AHV400-6 | 400 | 985 | 94,6 | 0,85 | 47,9 | 3.878 | 20,0 | 6,1 | 1,30 | 2,90 | 3.170 |
| AHV450-6 | 450 | 990 | 94,7 | 0,87 | 52,6 | 4.341 | 25,0 | 4,9 | 0,80 | 2,00 | 3.250 |
| AHV450-6 | 500 | 990 | 94,9 | 0,87 | 58,3 | 4.823 | 26,0 | 5,1 | 0,90 | 2,50 | 3.350 |
| AHV450-6 | 560 | 990 | 95,1 | 0,87 | 65,1 | 5.402 | 28,0 | 5,4 | 0,90 | 2,80 | 3.500 |
| AHV450-6 | 630 | 990 | 95,4 | 0,87 | 73,0 | 6.077 | 30,0 | 5,6 | 1,00 | 2,90 | 3.750 |
| AHV500-6 | 710 | 990 | 95,8 | 0,86 | 82,9 | 6.849 | 39,0 | 5,1 | 0,90 | 2,20 | 4.080 |
| AHV500-6 | 800 | 990 | 95,9 | 0,87 | 92,3 | 7.717 | 42,0 | 5,2 | 1,00 | 2,30 | 4.220 |
| AHV500-6 | 900 | 990 | 95,6 | 0,87 | 104,1 | 8.682 | 45,0 | 4,7 | 0,70 | 2,20 | 4.360 |
| AHV500-6 | 1000 | 990 | 96,1 | 0,88 | 113,8 | 9.646 | 47,0 | 5,2 | 0,90 | 2,20 | 4.530 |
| AHV560-6 | 1120 | 991 | 96,0 | 0,87 | 129,0 | 10.793 | 63,0 | 5,9 | 0,80 | 2,20 | 5.200 |
| AHV560-6 | 1250 | 991 | 96,2 | 0,87 | 143,7 | 12.046 | 70,0 | 6,2 | 0,90 | 2,30 | 5.450 |
| AHV560-6 | 1400 | 991 | 96,3 | 0,87 | 160,8 | 13.491 | 74,0 | 5,3 | 0,70 | 2,10 | 5.700 |
| AHV630-6 | 1600 | 993 | 96,0 | 0,87 | 184,3 | 15.388 | 124,0 | 5,7 | 0,80 | 2,10 | 7.100 |
| AHV630-6 | 1800 | 994 | 96,3 | 0,87 | 206,7 | 17.294 | 132,0 | 6,0 | 0,90 | 2,20 | 7.400 |
| AHV630-6 | 2000 | 994 | 96,5 | 0,87 | 229,2 | 19.215 | 140,0 | 6,2 | 1,00 | 2,40 | 7.750 |

# AHV-series

Three-phase motors with squirrel cage, protection degree IP23

**8 POLES-750 Rpm**
**COOLING: IC 01**
6.000V Y 50 Hz
Insulation class F

| TYPE | Power | Speed | Efficiency | Power factor | Rated current (6000V) | Nominal torque | Moment of inertia GD²/4 | Starting current ratio | Starting torque ratio | Break-down torque | Net weight |
|---|---|---|---|---|---|---|---|---|---|---|---|
| | KW | Rpm | % | συνφ | Amp | Nm | Kgm² | Ip/In | Mp/Mn | Mm/Mn | Kg |
| AHV400-8 | 250 | 740 | 93,4 | 0,78 | 33,0 | 3.226 | 21,0 | 4,8 | 1,10 | 2,40 | 2.780 |
| AHV450-8 | 315 | 740 | 94,2 | 0,80 | 40,2 | 4.065 | 27,0 | 5,1 | 1,20 | 2,40 | 2.930 |
| AHV450-8 | 355 | 740 | 94,5 | 0,81 | 44,6 | 4.581 | 29,0 | 4,5 | 1,20 | 2,40 | 3.130 |
| AHV450-8 | 400 | 740 | 94,9 | 0,81 | 50,1 | 5.162 | 31,0 | 5,0 | 1,00 | 2,40 | 3.350 |
| AHV450-8 | 450 | 740 | 95,0 | 0,82 | 55,6 | 5.807 | 33,0 | 4,2 | 0,80 | 2,10 | 3.430 |
| AHV500-8 | 500 | 740 | 94,6 | 0,83 | 61,3 | 6.453 | 43,0 | 5,1 | 1,10 | 2,50 | 4.100 |
| AHV500-8 | 560 | 740 | 95,1 | 0,84 | 67,5 | 7.227 | 46,0 | 5,0 | 1,00 | 2,30 | 4.285 |
| AHV500-8 | 630 | 740 | 94,6 | 0,85 | 75,4 | 8.130 | 50,0 | 4,6 | 0,80 | 2,20 | 4.520 |
| AHV500-8 | 710 | 740 | 95,3 | 0,84 | 85,3 | 9.163 | 53,0 | 5,3 | 1,10 | 2,50 | 4.750 |
| AHV560-8 | 800 | 740 | 95,3 | 0,84 | 96,2 | 10.324 | 80,0 | 5,4 | 1,00 | 2,30 | 5.400 |
| AHV560-8 | 900 | 740 | 95,7 | 0,84 | 107,7 | 11.615 | 88,0 | 5,7 | 1,10 | 2,50 | 5.630 |
| AHV560-8 | 1000 | 740 | 96,0 | 0,83 | 120,8 | 12.905 | 94,0 | 5,9 | 1,00 | 2,40 | 5.870 |
| AHV630-8 | 1120 | 744 | 95,3 | 0,85 | 133,0 | 14.376 | 134,0 | 5,6 | 1,00 | 2,30 | 7.460 |
| AHV630-8 | 1250 | 744 | 95,4 | 0,85 | 148,3 | 16.045 | 140,0 | 5,7 | 1,00 | 2,30 | 7.780 |
| AHV630-8 | 1400 | 744 | 95,5 | 0,85 | 166,0 | 17.970 | 152,0 | 5,1 | 0,90 | 2,20 | 8.100 |
| AHV630-8 | 1600 | 744 | 95,7 | 0,85 | 189,3 | 20.538 | 162,0 | 5,5 | 0,90 | 2,20 | 8.380 |

# AHV-series

Dimension sheet

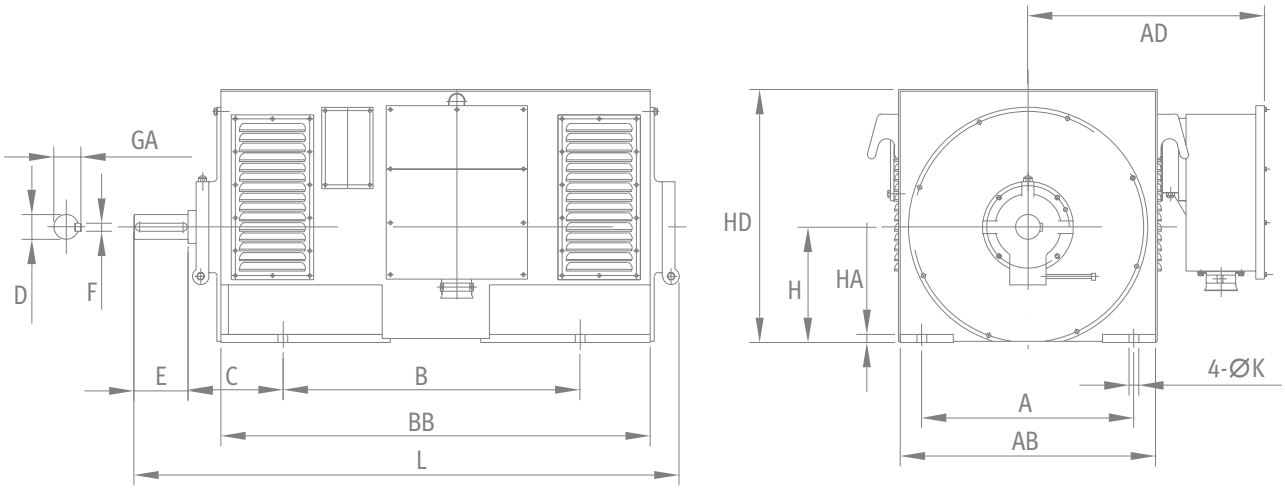


## MOUNTING B3

SIZE 355 -630

| TYPE | H | A | B | C | AB | BB | HD | HA | K | D | E | F | GA | DB | L |
|---|---|---|---|---|---|---|---|---|---|---|---|---|---|---|---|
| AHV355-2 | 355 | 630 | 900 | 315 | 780 | 1350 | 775 | 25 | 28 | 80 | 170 | 22 | 85 | M20 | 1720 |
| AHV355-4-6-8 | | | | | | | | | | 100 | 210 | 28 | 106 | M24 | 1760 |
| AHV400-2 | 400 | 710 | 1000 | 375 | 900 | 1510 | 875 | 26 | 35 | 90 | 170 | 25 | 100 | M24 | 1840 |
| AHV400-4-6-8 | | | | | | | | | | 110 | 210 | 28 | 116 | M24 | 1880 |
| AHV450-2 | 450 | 800 | 1120 | 355 | 980 | 1638 | 980 | 28 | 35 | 100 | 210 | 28 | 106 | M24 | 2060 |
| AHV450-4 | | | | | | | | | | 120 | | 32 | 127 | M24 | 2060 |
| AHV450-6-8 | | | | | | | | | | 130 | 250 | | 137 | M24 | 2100 |
| AHV500-4 | 500 | 900 | 1250 | 475 | 1112 | 1900 | 1075 | 28 | 42 | 130 | 250 | 32 | 137 | M24 | 2430 |
| AHV500-6-8 | | | | | | | | | | 140 | | 36 | 148 | M30 | |
| AHV560-4 | 560 | 1000 | 1400 | 500 | 1220 | 1938 | 1180 | 45 | 42 | 150 | 250 | 36 | 158 | M24 | 2490 |
| AHV560-6-8 | | | | | | | | | | 160 | 300 | 40 | 168 | M30 | 2540 |
| AHV630-4 | 630 | 1120 | 1600 | 530 | 1410 | 2140 | 1340 | 50 | 48 | 170 | 300 | 40 | 178 | M30 | 2715 |
| AHV630-6-8 | | | | | | | | | | 180 | | 45 | 188 | M30 | |

## BEARINGS

| TYPE | Drive-End | | | Non-Drive End | | |
|---|---|---|---|---|---|---|
| | 2p | 4p | 6, 8p | 2p | 4p | 6, 8p |
| 355 | 6319 C3 | 6322 C3 | 6322 C3 | 6319 C3 | 6322 C3 | 6322 C3 |
| 400 | 6319 C3 | 6324 C3 | 6324 C3 | 6319 C3 | 6324 C3 | 6324 C3 |
| 450 | 6220 C3 | 6326 C3 | 6328 C3 | 6220 C3 | 6326 C3 | 6328 C3 |
| 500 | | 6330 C3 | 6330 C3 | | 6328 C3 | 6328 C3 |
| 560 | | NU 334 | NU 334 | | 6334 C3 | 6334 C3 |
| 630 | | NU 338 | NU 338 | | 6338 C3 | 6338 C3 |

# AHV-Δ & TMKHV-Δ series

# AHV-Δ & TMKHV-Δ series

Medium voltage three-phase slip ring motors

## Slip Ring Motors

Slip ring motors are usually applied on high inertia loads or on high resistant starting torque loads. They are also required when there is starting current limitations on the power supply system. The most common loads driven by these motors are: ball mills, crushers, fans, exhausters, shredders and grinders for cement and mining industries, steel plants, among others.

## Standard Features

- Sinusoidal power supply of 3kV to 13.800V
- Motors manufactured in 4 to 12 poles
- Cast iron frames 315 to 450 and welded steel plates for frame from 500 and above
- Cooling methods used:
  - Open self-ventilated.
  - Self-ventilated by ducts, air inlet and outlet.
  - Forced ventilated, air inlet and outlet by ducts.
  - Forced ventilation, cooling on top of motor.
  - Self-ventilated with air-to air heat exchanger, heat exchanger on top of motor.
  - Self-ventilated with air-to-air heat exchanger, heat exchanger around the stator.
  - Forced ventilation in the air internal and external circuit, air-to-air heat exchanger.
  - Air-to-water heat exchanger.
  - Air-to-water heat exchanger, forced ventilation in the air internal circuit.
- Mounting: B3
- Degree of Protection: IP23 to IP55
- Service duty: (S1)
- Class of insulation: F
- Service Factor: 1.0
- Temperature rise: 80 °C
- Ambient temperature: 40 °C
- Altitude: 1000 m
- Temperature detector: Pt100, 1 per bearing with 3 wires.
- Temperature detector: Pt100, 2 per phase with 3 wires
- Two accessory terminal boxes, one for signal accessories and the other for those accessories requiring power supply (space heaters)
- Single phase space heater
- Grease lubricated bearings:
  - For 4 pole motors in the following frame sizes:

Up to frame 560 (including it) for 60 and 50 Hz.

  - Grease lubricated bearings for 6 pole motors and above.
- Painting: Acrylic polyurethane Polyamide epoxy (Final coat: Blue RAL 5010)
- Stainless steel nameplate
- Grounding lug on the frame and terminal box
- Bronze slip rings
- Rotor terminal box separated from stator terminal box
- Compartment of slip rings and brushes separated from stator and rotor, behind the non-drive end bearing
- 03 connection terminals in the power terminal box for high voltage (with terminal block)

# AHV-Δ & TMKHV-Δ series

Medium voltage three-phase slip ring motors

## Optional Features

- Service Factor: 1.15
- Class of insulation: H
- Temperature rise: 105°K for class F
- Temperature rise: 125°K for class H
- Ambient temperature above 40°C (on request)
- Altitude above 1000 m (on request)
- Mountings: B5, B35, V1, V3, V5, V6, V18, V19, V36
- Degree of Protection IPW55 and above
- Special balance
- Special Base
- Steel welded terminal box in different sizes based on internal available space
- Non-reversion ratchet
- Temperature detector: Thermistor (PTC or NTC)
- Two energized power terminal boxes
- One or more accessory terminal boxes
- Shaft: Special dimensions, double shaft end, tapered, hollow, special steel
- Encoder
- Sleeve bearing
- Oil lubricated bearing
- Special bearing (over designed) for axial or radial thrust
- Special painting
- Vibration detector
- Noise suppressor in the air inlet and outlet
- Tachogenerator
- CT for differential and integral protection
- Bearing thermometer with/without contacts
- Independent hydraulic oil circulation system for sleeve bearing

## Basic Data

**Note:** AHV- Δ means the three-phase AC medium voltage slip ring, IP23 protection motor.

**AHV-Δ 500 4**

- **4** — **No of poles**
- **500** — **Center line Height (mm)**
- **AHV-Δ** — **Code of motor series (wound- rotor)**

## Structure declaration

AHV-Δ series motors are basic type, their protection grade are IP23, cooling methods are IC01. By changing the upper guard with air-to-air cooler or air-to-water cooler, we can get various motors with different protection grade and cooling-down method, such as TMKHV-Δ(air to air cooler).

Adopting welding steel plate to make the box type frame have features as light weight and enough rigidity.

Stator winding adopts F class insulation and its end adopts firm binding. The whole stator adopts solvent- free varnish Vacuum Pressure Impregnation (VPI) to ensure the stator has excellent electric properly and humidify resistance.

Rotor is made of cast aluminum or cooper bar. Aluminum rotor is made of pure aluminum, copper bar wedging copper rotor enhances the entirety of rotor. Wound rotor adopts F class insulating material and solvent-free varnish Vacuum Pressure Impregnation (VPI).

The motor adopts rolling bearing or sleeve bearing, according to the output power and rated speed. Bearing protection grade normally is IP44, if the motors 's protect grade increases, so does the bearings. Rolling bearing adopts lubricating grease and its grease charger and discharger can be operated without stopping the motor. The junction box is of IP54 protection grade and it is usually mounted on the motor's right side (viewed from shaft extension end). It is also can be mounted on the left side and its outlets have four optional orientations(up, down, left and right orientation). Separated grounding unit is available in main junction box too.

## Notice for selecting motors:

Please specify these technical data (for instance):

| | |
|---|---|
| Type of motor: | (AHV-Δ, TMKHV-Δ) |
| Rated frequency: | (50Hz) |
| Rated output power: | (1000 Kw) |
| Rated voltage: | (6kV) |
| Number of poles: | (4Poles) |
| Protection grade: | (IP23) |
| Cooling method: | (IC01) |
| Mounting type: | (IMB3) |
| Rotary direction: | clockwise (viewed from the drive end) |
| Junction box: | right side (viewed from the drive end). |

# AHV-Δ & TMKHV-Δ series

Medium voltage three-phase slip ring motors

**IP23, 4 POLES-1.500 Rpm**
6.000 V Y/50Hz
Insulation class F

| TYPE | Rated output (kW) | Rated current (A) | Speed (r\min) | Efficiency (%) | Power Factor (cosφ) | Mmax Mn | U (V) | I (A) | J motor (Kgm²) | Weight (kg) |
|---|---|---|---|---|---|---|---|---|---|---|
| AHV-Δ 355-4 | 220 | 26.3 | 1474 | 93.6 | 0.860 | 2.08 | 330 | 420.8 | 6.3 | 2200 |
| AHV-Δ 355-4 | 250 | 29.6 | 1474 | 93.9 | 0.865 | 2.06 | 364 | 433.5 | 6.9 | 2290 |
| AHV-Δ 355-4 | 280 | 33.1 | 1476 | 94.1 | 0.865 | 2.11 | 404 | 435.1 | 7.6 | 2370 |
| AHV-Δ 400-4 | 315 | 36.8 | 1477 | 93.9 | 0.878 | 2.74 | 399 | 489.4 | 10.4 | 2630 |
| AHV-Δ 400-4 | 355 | 41.1 | 1477 | 94.1 | 0.883 | 2.69 | 433 | 508.3 | 11.2 | 2710 |
| AHV-Δ 400-4 | 400 | 46.1 | 1478 | 94.3 | 0.885 | 2.68 | 472 | 524 | 12.1 | 2790 |
| AHV-Δ 400-4 | 450 | 51.4 | 1478 | 94.5 | 0.891 | 2.65 | 520 | 534.4 | 13.5 | 2910 |
| AHV-Δ 400-4 | 500 | 57.4 | 1480 | 94.7 | 0.885 | 2.81 | 577 | 532.8 | 14.3 | 2980 |
| AHV-Δ 450-4 | 560 | 63.8 | 1480 | 94.8 | 0.891 | 2.5 | 700 | 495 | 20.6 | 3630 |
| AHV-Δ 450-4 | 630 | 71 | 1481 | 95.0 | 0.898 | 2.53 | 779 | 498.9 | 22.9 | 3760 |
| AHV-Δ 450-4 | 710 | 80.1 | 1482 | 95.2 | 0.897 | 2.64 | 876 | 498.1 | 25.2 | 3860 |
| AHV-Δ 450-4 | 800 | 90.3 | 1484 | 95.4 | 0.894 | 2.82 | 1001 | 488.8 | 28 | 4020 |
| AHV-Δ 500-4 | 900 | 100.2 | 1485 | 95.4 | 0.906 | 2.64 | 822 | 670.6 | 39 | 4410 |
| AHV-Δ 500-4 | 1000 | 111.7 | 1485 | 95.5 | 0.902 | 2.71 | 896 | 682.1 | 41.2 | 4540 |
| AHV-Δ 500-4 | 1120 | 125.9 | 1486 | 95.7 | 0.895 | 2.8 | 984 | 693.8 | 43.4 | 4710 |
| AHV-Δ 500-4 | 1250 | 142.3 | 1487 | 95.8 | 0.883 | 2.98 | 1091 | 696.1 | 45.6 | 4870 |
| AHV-Δ 560-4 | 1400 | 154.6 | 1485 | 95.7 | 0.911 | 2.53 | 1363 | 630.2 | 74 | 6170 |
| AHV-Δ 560-4 | 1600 | 176.3 | 1485 | 95.8 | 0.912 | 2.56 | 1515 | 646.7 | 80.6 | 6460 |
| AHV-Δ 560-4 | 1800 | 198 | 1486 | 96.0 | 0.911 | 2.69 | 1704 | 644.3 | 88.6 | 6740 |
| AHV-Δ 630-4 | 2000 | 219.1 | 1488 | 96.2 | 0.913 | 2.43 | 1449 | 843.4 | 122.5 | 8170 |
| AHV-Δ 630-4 | 2240 | 244.7 | 1488 | 96.3 | 0.914 | 2.36 | 1566 | 875 | 132.7 | 8570 |
| AHV-Δ 630-4 | 2500 | 272.9 | 1489 | 96.5 | 0.914 | 2.52 | 1761 | 864 | 143 | 8970 |

**IP23, 4 POLES-1.500 Rpm**
10.000 V Y/50Hz
Insulation class F

| TYPE | Rated output (kW) | Rated current (A) | Speed (r\min) | Efficiency (%) | Power Factor (cosφ) | Mmax Mn | U (V) | I (A) | J motor (Kgm²) | Weight (kg) |
|---|---|---|---|---|---|---|---|---|---|---|
| AHV-Δ 450-4 | 315 | 22.7 | 1478 | 93.3 | 0.860 | 2.65 | 453 | 434.8 | 12.5 | 3750 |
| AHV-Δ 450-4 | 355 | 25.5 | 1477.9 | 93.5 | 0.861 | 2.61 | 487 | 454.6 | 13.3 | 3800 |
| AHV-Δ 450-4 | 400 | 28.5 | 1478 | 93.8 | 0.865 | 2.57 | 529 | 471.9 | 14.3 | 3860 |
| AHV-Δ 450-4 | 450 | 31.9 | 1478.3 | 93.9 | 0.867 | 2.56 | 577 | 485.8 | 15.4 | 4020 |
| AHV-Δ 450-4 | 500 | 35.3 | 1479.5 | 94.2 | 0.868 | 2.63 | 635 | 488.5 | 16.7 | 4160 |
| AHV-Δ 450-4 | 560 | 39.4 | 1480.4 | 94.4 | 0.870 | 2.68 | 706 | 490.6 | 18.4 | 4310 |
| AHV-Δ 500-4 | 630 | 43.6 | 1485.2 | 94.5 | 0.883 | 2.91 | 831 | 467 | 32.6 | 4550 |
| AHV-Δ 500-4 | 710 | 48.8 | 1485.1 | 94.7 | 0.886 | 2.85 | 895 | 488 | 34.8 | 4700 |
| AHV-Δ 500-4 | 800 | 54.3 | 1485 | 94.9 | 0.896 | 2.77 | 972 | 506.1 | 38.4 | 4880 |
| AHV-Δ 500-4 | 900 | 60.9 | 1485.4 | 95.2 | 0.897 | 2.79 | 1061 | 520.5 | 41.2 | 5040 |
| AHV-Δ 500-4 | 1000 | 67.3 | 1485.8 | 95.3 | 0.901 | 2.8 | 1168 | 524.6 | 45.6 | 5190 |
| AHV-Δ 560-4 | 1120 | 75.5 | 1484 | 95.4 | 0.898 | 2.49 | 1060 | 650.6 | 52.8 | 6650 |
| AHV-Δ 560-4 | 1250 | 84 | 1484.7 | 95.6 | 0.899 | 2.55 | 1167 | 658 | 57 | 6750 |
| AHV-Δ 560-4 | 1400 | 94 | 1485.6 | 95.7 | 0.899 | 2.63 | 1297 | 661.1 | 62.1 | 6900 |
| AHV-Δ 630-4 | 1600 | 108 | 1488.5 | 95.9 | 0.891 | 2.58 | 1111 | 880.5 | 92.6 | 8600 |
| AHV-Δ 630-4 | 1800 | 121.1 | 1488.8 | 96.1 | 0.893 | 2.59 | 1224 | 898.4 | 101.1 | 8750 |
| AHV-Δ 630-4 | 2000 | 133.8 | 1489.4 | 96.2 | 0.897 | 2.64 | 1361 | 895.3 | 112.8 | 9000 |

# AHV-Δ & TMKHV-Δ series

Medium voltage three-phase slip ring motors

**IP23, 6 POLES-1.000 Rpm**
6.000 V Y/50Hz
Insulation class F

| TYPE | Rated output (kW) | Rated current (A) | Speed (r\min) | Efficiency (%) | Power Factor (cosφ) | Mmax Mn | U (V) | I (A) | J motor (Kgm²) | Weight (kg) |
|---|---|---|---|---|---|---|---|---|---|---|
| AHV-Δ 400-6 | 220 | 27.3 | 984 | 93.2 | 0.833 | 2.51 | 337 | 408.1 | 13.6 | 2610 |
| AHV-Δ 400-6 | 250 | 31 | 984 | 93.3 | 0.833 | 2.42 | 361 | 433.5 | 14.3 | 2700 |
| AHV-Δ 400-6 | 280 | 34.4 | 983 | 93.5 | 0.837 | 2.35 | 389 | 450.7 | 15.4 | 2790 |
| AHV-Δ 400-6 | 315 | 38.1 | 983 | 93.7 | 0.848 | 2.24 | 422 | 467.8 | 17.2 | 2900 |
| AHV-Δ 400-6 | 355 | 43 | 983 | 93.8 | 0.846 | 2.23 | 460 | 483 | 18.3 | 2990 |
| AHV-Δ 450-6 | 400 | 47.3 | 985 | 94.4 | 0.861 | 2.35 | 597 | 417.5 | 23.3 | 3580 |
| AHV-Δ 450-6 | 450 | 53.3 | 985 | 94.6 | 0.859 | 2.39 | 656 | 426.3 | 24.9 | 3690 |
| AHV-Δ 450-6 | 500 | 59.1 | 986 | 94.7 | 0.860 | 2.44 | 729 | 425 | 27.5 | 3900 |
| AHV-Δ 450-6 | 560 | 66.1 | 987 | 94.9 | 0.859 | 2.51 | 820 | 421.7 | 30.5 | 3950 |
| AHV-Δ 500-6 | 630 | 73.3 | 988 | 95.1 | 0.870 | 2.18 | 733 | 533.1 | 47.9 | 4150 |
| AHV-Δ 500-6 | 710 | 82.6 | 989 | 95.1 | 0.870 | 2.24 | 825 | 532.9 | 53 | 4280 |
| AHV-Δ 500-6 | 800 | 92.8 | 989 | 95.3 | 0.871 | 2.34 | 943 | 522.9 | 59.9 | 4430 |
| AHV-Δ 500-6 | 900 | 104.4 | 989 | 95.4 | 0.869 | 2.3 | 1015 | 546.4 | 63 | 4580 |
| AHV-Δ 560-6 | 1000 | 115.3 | 990 | 95.5 | 0.873 | 2.35 | 1051 | 586.7 | 92.8 | 5800 |
| AHV-Δ 560-6 | 1120 | 128.2 | 989 | 95.6 | 0.879 | 2.27 | 1133 | 610.2 | 101.1 | 6060 |
| AHV-Δ 560-6 | 1250 | 142.2 | 989 | 95.8 | 0.883 | 2.2 | 1229 | 628.5 | 111 | 6230 |
| AHV-Δ 630-6 | 1400 | 159.4 | 992 | 96.1 | 0.880 | 2.3 | 1343 | 639.6 | 149.7 | 7080 |
| AHV-Δ 630-6 | 1600 | 181.8 | 991 | 96.1 | 0.881 | 2.27 | 1478 | 664.8 | 158.6 | 7330 |
| AHV-Δ 630-6 | 1800 | 203.7 | 992 | 96.3 | 0.883 | 2.28 | 1643 | 670.9 | 179.7 | 7580 |

**IP23, 6 POLES-1.000 Rpm**
10.000 V Y/50Hz
Insulation class F

| TYPE | Rated output (kW) | Rated current (A) | Speed (r\min) | Efficiency (%) | Power Factor (cosφ) | Mmax Mn | U (V) | I (A) | J motor (Kgm²) | Weight (kg) |
|---|---|---|---|---|---|---|---|---|---|---|
| AHV-Δ 450-6 | 280 | 21.2 | 984.8 | 93.2 | 0.819 | 2.3 | 447 | 394.3 | 17.6 | 4000 |
| AHV-Δ 450-6 | 315 | 23.6 | 984.6 | 93.5 | 0.825 | 2.23 | 482 | 411.8 | 19 | 4150 |
| AHV-Δ 450-6 | 355 | 26.5 | 984.4 | 93.6 | 0.827 | 2.17 | 523 | 428.6 | 20.4 | 4310 |
| AHV-Δ 450-6 | 400 | 29.8 | 984.6 | 93.8 | 0.825 | 2.16 | 570 | 442.5 | 21.7 | 4450 |
| AHV-Δ 500-6 | 450 | 32.7 | 988 | 93.9 | 0.846 | 2.83 | 728 | 382.4 | 37.7 | 4530 |
| AHV-Δ 500-6 | 500 | 35.7 | 987.7 | 94.2 | 0.859 | 2.69 | 782 | 395.8 | 41.7 | 4600 |
| AHV-Δ 500-6 | 560 | 39.7 | 987.7 | 94.4 | 0.864 | 2.64 | 843 | 410.9 | 44.9 | 4690 |
| AHV-Δ 500-6 | 630 | 44.7 | 987.8 | 94.5 | 0.862 | 2.63 | 913 | 426.5 | 47.3 | 4830 |
| AHV-Δ 500-6 | 710 | 50.3 | 988 | 94.7 | 0.861 | 2.64 | 996 | 439.9 | 50.4 | 4980 |
| AHV-Δ 560-6 | 800 | 56.6 | 987.5 | 94.9 | 0.860 | 2.32 | 936 | 531.6 | 62.6 | 6550 |
| AHV-Δ 560-6 | 900 | 63.3 | 987.5 | 95.0 | 0.864 | 2.27 | 1015 | 551.7 | 67.6 | 6700 |
| AHV-Δ 560-6 | 1000 | 70 | 987.7 | 95.2 | 0.867 | 2.26 | 1109 | 560.9 | 73.7 | 6840 |
| AHV-Δ 560-6 | 1120 | 77.9 | 988 | 95.3 | 0.871 | 2.26 | 1221 | 569.8 | 81.1 | 6980 |
| AHV-Δ 630-6 | 1250 | 87.6 | 988.8 | 95.5 | 0.863 | 2.34 | 1059 | 729.3 | 139.8 | 8700 |
| AHV-Δ 630-6 | 1400 | 97.5 | 989 | 95.6 | 0.867 | 2.32 | 1156 | 747.5 | 151.5 | 9000 |
| AHV-Δ 630-6 | 1600 | 110.7 | 989.1 | 95.8 | 0.871 | 2.25 | 1274 | 776.2 | 167.8 | 9160 |

# AHV-Δ & TMKHV-Δ series

Medium voltage three-phase slip ring motors

**IP23, 8 POLES-750 Rpm**
6.000 V Y/50Hz
Insulation class F

| TYPE | Rated output (kW) | Rated current (A) | Speed (r\min) | Efficiency (%) | Power Factor (cosφ) | Mmax Mn | U (V) | I (A) | J motor (Kgm²) | Weight (kg) |
|---|---|---|---|---|---|---|---|---|---|---|
| AHV-Δ 400-8 | 220 | 28.5 | 730 | 91.8 | 0.809 | 1.94 | 291 | 486.9 | 19.6 | 2600 |
| AHV-Δ 400-8 | 250 | 32.3 | 732 | 92.3 | 0.807 | 2.03 | 332 | 2.23 | 480.4 | 2690 |
| AHV-Δ 400-8 | 280 | 36.1 | 732 | 92.5 | 0.807 | 1.99 | 358 | 500.1 | 23.3 | 2750 |
| AHV-Δ 450-8 | 315 | 39.7 | 738 | 93.5 | 0.816 | 2.47 | 549 | 357.9 | 34 | 3410 |
| AHV-Δ 450-8 | 355 | 44.3 | 738 | 93.7 | 0.824 | 2.39 | 600 | 369.6 | 37.5 | 3520 |
| AHV-Δ 450-8 | 400 | 49.3 | 738 | 93.9 | 0.831 | 2.33 | 661 | 378 | 41.8 | 3600 |
| AHV-Δ 450-8 | 450 | 55.4 | 738 | 94.1 | 0.832 | 2.34 | 735 | 382 | 46.1 | 3730 |
| AHV-Δ 500-8 | 500 | 61.4 | 739 | 94.3 | 0.831 | 2.1 | 600 | 522.2 | 59.5 | 4150 |
| AHV-Δ 500-8 | 560 | 68.3 | 739 | 94.5 | 0.836 | 2.07 | 661 | 530.9 | 65.7 | 4260 |
| AHV-Δ 500-8 | 630 | 76.1 | 740 | 94.6 | 0.842 | 2.03 | 736 | 536.7 | 74.4 | 4420 |
| AHV-Δ 500-8 | 710 | 86.5 | 741 | 94.8 | 0.833 | 2.18 | 826 | 534.8 | 78.2 | 4570 |
| AHV-Δ 560-8 | 800 | 96 | 741 | 95.1 | 0.843 | 2.05 | 829 | 602.2 | 107.5 | 5560 |
| AHV-Δ 560-8 | 900 | 108.2 | 742 | 95.3 | 0.840 | 2.19 | 947 | 589.1 | 118.2 | 5780 |
| AHV-Δ 560-8 | 1000 | 124.6 | 743 | 95.4 | 0.809 | 2.58 | 1099 | 557.7 | 123.7 | 6000 |
| AHV-Δ 630-8 | 1120 | 132.6 | 742 | 95.6 | 0.850 | 2.16 | 1177 | 588.5 | 191.3 | 7090 |
| AHV-Δ 630-8 | 1250 | 147.6 | 742 | 95.7 | 0.852 | 2.13 | 1276 | 606 | 206.3 | 7400 |
| AHV-Δ 630-8 | 1400 | 164.7 | 742 | 95.8 | 0.854 | 2.1 | 1393 | 621.8 | 224.2 | 7710 |

**IP23, 8 POLES-750 Rpm**
10.000 V Y/50Hz
Insulation class F

| TYPE | Rated output (kW) | Rated current (A) | Speed (r\min) | Efficiency (%) | Power Factor (cosφ) | Mmax Mn | U (V) | I (A) | J motor (Kgm²) | Weight (kg) |
|---|---|---|---|---|---|---|---|---|---|---|
| AHV-Δ 500-8 | 280 | 23.1 | 740.5 | 93.1 | 0.752 | 2.76 | 540 | 323.1 | 34.8 | 4450 |
| AHV-Δ 500-8 | 315 | 25.3 | 739.9 | 93.2 | 0.770 | 2.55 | 569 | 345.9 | 37.2 | 4530 |
| AHV-Δ 500-8 | 355 | 27.6 | 739.1 | 93.4 | 0.795 | 2.31 | 603 | 370 | 41.2 | 4600 |
| AHV-Δ 500-8 | 400 | 31.4 | 740 | 93.7 | 0.786 | 2.44 | 678 | 368.6 | 44.3 | 4700 |
| AHV-Δ 500-8 | 450 | 35.1 | 739.7 | 93.9 | 0.789 | 2.35 | 723 | 389.3 | 46.7 | 4800 |
| AHV-Δ 500-8 | 500 | 38.9 | 739.6 | 94.0 | 0.789 | 2.32 | 774 | 404 | 49.2 | 4950 |
| AHV-Δ 560-8 | 560 | 42.8 | 741.2 | 94.2 | 0.802 | 2.32 | 716 | 487.8 | 80.8 | 6300 |
| AHV-Δ 560-8 | 630 | 48.9 | 742.1 | 94.5 | 0.788 | 2.52 | 816 | 477.6 | 87.3 | 6540 |
| AHV-Δ 560-8 | 710 | 54.4 | 741.9 | 94.6 | 0.797 | 2.39 | 880 | 500.2 | 95.4 | 6750 |
| AHV-Δ 560-8 | 800 | 60.2 | 741.7 | 94.8 | 0.809 | 2.29 | 955 | 520 | 105 | 6910 |
| AHV-Δ 630-8 | 900 | 65.4 | 740.3 | 95.1 | 0.835 | 2.25 | 916 | 610.5 | 134.5 | 8500 |
| AHV-Δ 630-8 | 1000 | 72.4 | 740.5 | 95.2 | 0.837 | 2.24 | 1000 | 620.8 | 146.1 | 8650 |
| AHV-Δ 630-8 | 1120 | 80.7 | 740.6 | 95.4 | 0.841 | 2.21 | 1101 | 631.4 | 162.3 | 8950 |

# AHV-Δ & TMKHV-Δ series

Medium voltage three-phase slip ring motors

**IP23, 10 POLES-600 Rpm**
6.000 V Y/50Hz
Insulation class F

| TYPE | Rated output (kW) | Rated current (A) | Speed (r\min) | Efficiency (%) | Power Factor (cosφ) | Mmax Mn | U (V) | I (A) | J motor (Kgm²) | Weight (kg) |
|---|---|---|---|---|---|---|---|---|---|---|
| AHV-Δ 450-10 | 220 | 29.7 | 588 | 92.5 | 0.770 | 2.34 | 501 | 277.7 | 2.34 | 3310 |
| AHV-Δ 450-10 | 250 | 33.5 | 588 | 92.7 | 0.774 | 2.27 | 543 | 291.5 | 33.8 | 3410 |
| AHV-Δ 450-10 | 280 | 37.1 | 588 | 92.8 | 0.782 | 2.2 | 593 | 299.2 | 37.3 | 3510 |
| AHV-Δ 450-10 | 315 | 41.2 | 588 | 93.0 | 0.790 | 2.15 | 653 | 305.7 | 41.6 | 3590 |
| AHV-Δ 450-10 | 355 | 46.3 | 588 | 93.2 | 0.792 | 2.15 | 726 | 309.3 | 45.9 | 3720 |
| AHV-Δ 500-10 | 400 | 51.4 | 589 | 93.8 | 0.798 | 1.91 | 594 | 428.8 | 59 | 4110 |
| AHV-Δ 500-10 | 450 | 57.4 | 589 | 93.9 | 0.803 | 1.87 | 655 | 438.3 | 65.3 | 4220 |
| AHV-Δ 500-10 | 500 | 64 | 590 | 94.1 | 0.799 | 1.97 | 726 | 435.6 | 69.1 | 4390 |
| AHV-Δ 500-10 | 560 | 71.6 | 591 | 94.3 | 0.798 | 2 | 818 | 432.2 | 77.8 | 4540 |
| AHV-Δ 560-10 | 630 | 79.7 | 592 | 94.7 | 0.804 | 2.19 | 858 | 458.8 | 107.2 | 5570 |
| AHV-Δ 560-10 | 710 | 90.6 | 592 | 94.8 | 0.795 | 2.33 | 980 | 450.1 | 117.9 | 5780 |
| AHV-Δ 560-10 | 800 | 102.2 | 592 | 94.9 | 0.793 | 2.3 | 1054 | 471.7 | 123.4 | 5980 |
| AHV-Δ 630-10 | 900 | 109.7 | 591 | 95.0 | 0.831 | 2.1 | 1018 | 552.5 | 178.5 | 7090 |
| AHV-Δ 630-10 | 1000 | 121.5 | 591 | 95.1 | 0.832 | 2.06 | 1103 | 566.7 | 193.4 | 7400 |
| AHV-Δ 630-10 | 1120 | 135.8 | 591 | 95.2 | 0.833 | 2.05 | 1204 | 581.4 | 208.2 | 7710 |

**IP23, 10 POLES-600 Rpm**
10.000 V Y/50Hz
Insulation class F

| TYPE | Rated output (kW) | Rated current (A) | Speed (r\min) | Efficiency (%) | Power Factor (cosφ) | Mmax Mn | U (V) | I (A) | J motor (Kgm²) | Weight (kg) |
|---|---|---|---|---|---|---|---|---|---|---|
| AHV-Δ 500-10 | 250 | 21.2 | 591.7 | 92.3 | 0.740 | 2.38 | 425 | 371 | 48.6 | 4440 |
| AHV-Δ 500-10 | 280 | 23.6 | 592.1 | 92.5 | 0.740 | 2.42 | 479 | 367.8 | 54.5 | 4510 |
| AHV-Δ 500-10 | 315 | 26.3 | 591.9 | 92.8 | 0.747 | 2.33 | 511 | 388.1 | 57.5 | 4580 |
| AHV-Δ 500-10 | 355 | 29.5 | 591.7 | 92.9 | 0.747 | 2.26 | 547 | 409 | 60.5 | 4680 |
| AHV-Δ 560-10 | 400 | 32 | 591.8 | 93.0 | 0.777 | 2.55 | 726 | 344.5 | 86 | 5880 |
| AHV-Δ 560-10 | 450 | 35.3 | 591.5 | 93.2 | 0.789 | 2.42 | 780 | 361.6 | 93 | 6040 |
| AHV-Δ 560-10 | 500 | 38.7 | 591.4 | 93.5 | 0.797 | 2.34 | 841 | 372.9 | 101.7 | 6280 |
| AHV-Δ 560-10 | 560 | 42.9 | 591.2 | 93.6 | 0.805 | 2.25 | 912 | 385.7 | 112.1 | 6520 |
| AHV-Δ 560-10 | 630 | 49.7 | 591.7 | 93.7 | 0.781 | 2.4 | 990 | 397.7 | 110.6 | 6730 |
| AHV-Δ 630-10 | 710 | 53.5 | 592 | 94.4 | 0.812 | 2.29 | 912 | 486.4 | 156.9 | 8000 |
| AHV-Δ 630-10 | 800 | 59.7 | 592 | 94.5 | 0.818 | 2.23 | 996 | 502.1 | 171.7 | 8480 |
| AHV-Δ 630-10 | 900 | 67.1 | 592.1 | 94.7 | 0.819 | 2.23 | 1096 | 512.9 | 186.5 | 8630 |
| AHV-Δ 630-10 | 1000 | 74.6 | 592.4 | 94.4 | 0.820 | 2.26 | 1218 | 513.8 | 207.2 | 8920 |

# AHV-Δ & TMKHV-Δ series

Medium voltage three-phase slip ring motors

**IP23, 12 POLES-500 Rpm**
6.000 V Y/50Hz
Insulation class F

| TYPE | Rated output (kW) | Rated current (A) | Speed (r\min) | Efficiency (%) | Power Factor (cosφ) | Mmax Mn | U (V) | I (A) | J motor (Kgm²) | Weight (kg) |
|---|---|---|---|---|---|---|---|---|---|---|
| AHV-Δ 450-12 | 220 | 31.6 | 489 | 92.1 | 0.728 | 2.21 | 548 | 256.4 | 40.9 | 3580 |
| AHV-Δ 450-12 | 250 | 35.5 | 488 | 92.2 | 0.734 | 2.14 | 598 | 267.5 | 44.4 | 3710 |
| AHV-Δ 500-12 | 280 | 38.7 | 489 | 92.8 | 0.750 | 1.95 | 432 | 417.7 | 56.1 | 3950 |
| AHV-Δ 500-12 | 315 | 42.8 | 488 | 92.9 | 0.763 | 1.8 | 462 | 444.1 | 62.2 | 4070 |
| AHV-Δ 500-12 | 355 | 49.3 | 490 | 93.2 | 0.744 | 2 | 531 | 428.4 | 65.9 | 4210 |
| AHV-Δ 500-12 | 400 | 54.1 | 489 | 93.3 | 0.762 | 1.85 | 578 | 447 | 75.3 | 4350 |
| AHV-Δ 560-12 | 450 | 60 | 491 | 93.9 | 0.769 | 2.06 | 695 | 410.1 | 94.5 | 5380 |
| AHV-Δ 560-12 | 500 | 66.8 | 492 | 94.0 | 0.766 | 2.11 | 772 | 409 | 103.2 | 5540 |
| AHV-Δ 560-12 | 560 | 74.9 | 492 | 94.2 | 0.763 | 2.18 | 868 | 405.4 | 113.7 | 5730 |
| AHV-Δ 560-12 | 630 | 84.3 | 492 | 94.1 | 0.764 | 2.1 | 925 | 429.6 | 119 | 5920 |
| AHV-Δ 630-12 | 710 | 91.7 | 492 | 94.6 | 0.787 | 2.1 | 959 | 464.5 | 190.3 | 7010 |
| AHV-Δ 630-12 | 800 | 102.6 | 492 | 94.8 | 0.792 | 2.02 | 1033 | 487 | 205 | 7310 |
| AHV-Δ 630-12 | 900 | 114.9 | 492 | 94.8 | 0.795 | 1.95 | 1120 | 506.9 | 222.6 | 7610 |

**IP23, 12 POLES-500 Rpm**
10.000 V Y/50Hz
Insulation class F

| TYPE | Rated output (kW) | Rated current (A) | Speed (r\min) | Efficiency (%) | Power Factor (cosφ) | Mmax Mn | U (V) | I (A) | J motor (Kgm²) | Weight (kg) |
|---|---|---|---|---|---|---|---|---|---|---|
| AHV-Δ 560-12 | 200 | 18.5 | 494.2 | 91.6 | 0.680 | 3.13 | 523 | 239 | 74 | 5720 |
| AHV-Δ 560-12 | 220 | 20 | 492.5 | 91.3 | 0.695 | 2.97 | 550 | 251.5 | 74.7 | 5790 |
| AHV-Δ 560-12 | 250 | 21.2 | 491.7 | 91.5 | 0.745 | 2.47 | 572 | 276.4 | 79.6 | 5860 |
| AHV-Δ 560-12 | 280 | 23.4 | 490.7 | 91.8 | 0.752 | 2.35 | 581 | 306.6 | 83.2 | 5950 |
| AHV-Δ 560-12 | 315 | 26.5 | 491.2 | 92.2 | 0.746 | 2.44 | 649 | 307.1 | 90 | 6010 |
| AHV-Δ 560-12 | 355 | 30.2 | 491.9 | 92.5 | 0.734 | 2.57 | 735 | 303.9 | 98.5 | 6250 |
| AHV-Δ 560-12 | 400 | 33.1 | 491.4 | 92.7 | 0.753 | 2.4 | 790 | 319.9 | 108.7 | 6500 |
| AHV-Δ 560-12 | 450 | 37.2 | 491.4 | 92.9 | 0.752 | 2.37 | 850 | 334.3 | 113.9 | 6700 |
| AHV-Δ 630-12 | 500 | 40.5 | 492.8 | 93.7 | 0.761 | 2.46 | 791 | 395.7 | 154.3 | 7950 |
| AHV-Δ 630-12 | 560 | 44.5 | 492.7 | 93.9 | 0.774 | 2.35 | 853 | 411.7 | 169 | 8450 |
| AHV-Δ 630-12 | 630 | 49.5 | 492.6 | 94.0 | 0.781 | 2.27 | 926 | 427.8 | 183.7 | 8600 |
| AHV-Δ 630-12 | 710 | 55.2 | 492.4 | 94.2 | 0.789 | 2.18 | 1011 | 442.3 | 204.1 | 8900 |

# AHV-Δ & TMKHV-Δ series

Dimension sheet

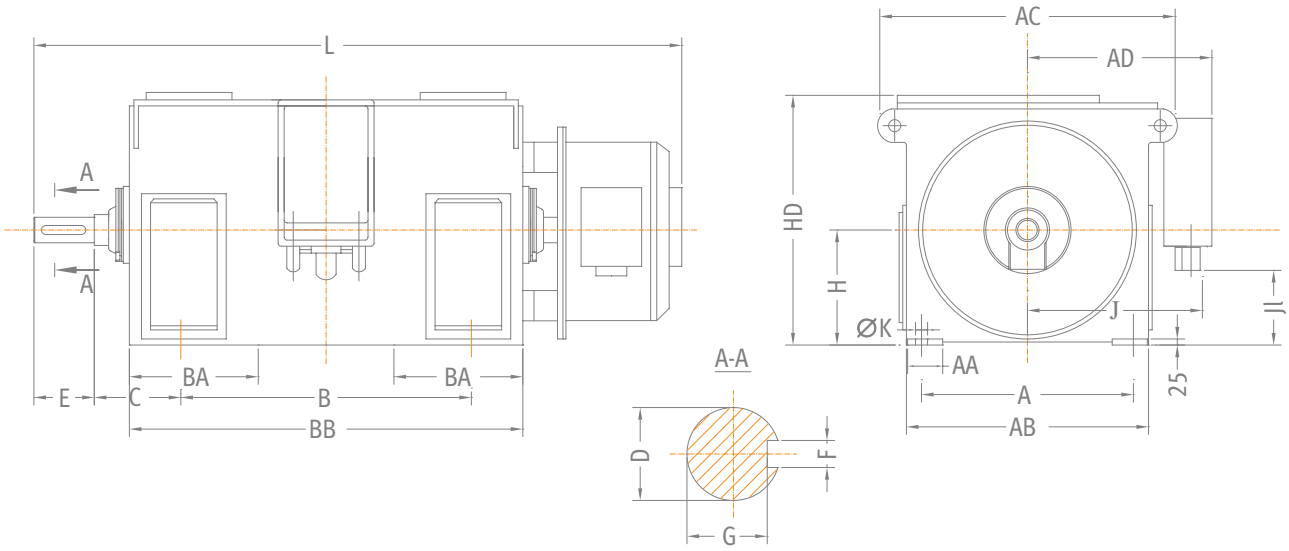


## MOUNTING B3

SIZE 355-500

## AHV-Δ series, 6KV

| TYPE | A | AA | AB | AC | AD | B | BA | BB | C |
|---|---|---|---|---|---|---|---|---|---|
| AHV-Δ 355-4 | 630 | 130 | 770 | 970 | 745 | 900 | 565 | 1420 | 315 |
| AHV-Δ 400-4-8 | 710 | 130 | 810 | 1010 | 760 | 1000 | 565 | 1510 | 355 |
| AHV-Δ 450-4 | 800 | 150 | 910 | 1120 | 810 | 1120 | 600 | 1620 | 355 |
| AHV-Δ 450-6-12 | 800 | 150 | 910 | 1120 | 810 | 1120 | 600 | 1620 | 355 |
| AHV-Δ 500-4 | 900 | 150 | 1010 | 1220 | 860 | 1250 | 655 | 1730 | 475 |
| AHV-Δ 500-6-12 | 900 | 150 | 1010 | 1220 | 860 | 1250 | 655 | 1730 | 475 |

| TYPE | D | E | F | G | HD | J | Jl | K | L |
|---|---|---|---|---|---|---|---|---|---|
| AHV-Δ 355-4 | 100 | 210 | 28 | 90 | 780 | 587 | 55 | 28 | 2150 |
| AHV-Δ 400-4-8 | 110 | 210 | 28 | 100 | 835 | 607 | 85 | 35 | 2310 |
| AHV-Δ 450-4 | 120 | 210 | 32 | 109 | 935 | 657 | 185 | 35 | 2570 |
| AHV-Δ 450-6-12 | 130 | 250 | 32 | 119 | 938 | 657 | 185 | 35 | 2610 |
| AHV-Δ 500-4 | 130 | 250 | 32 | 119 | 1040 | 707 | 285 | 42 | 2920 |
| AHV-Δ 500-6-12 | 140 | 250 | 36 | 128 | 1040 | 707 | 285 | 42 | 2920 |

# AHV-Δ & TMKHV-Δ series

Dimension sheet

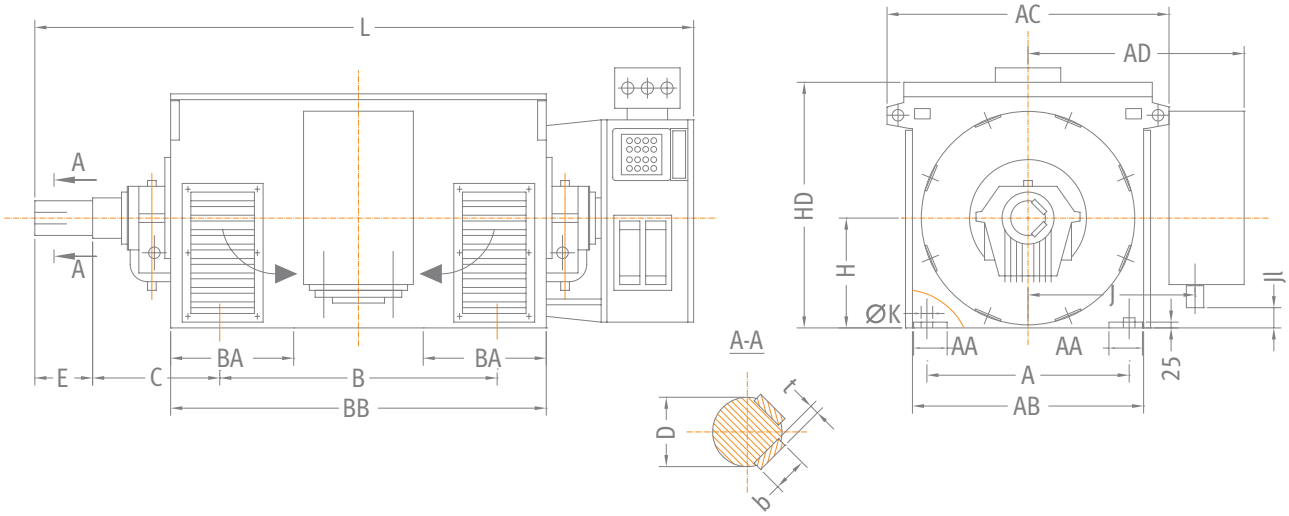


## MOUNTING B3

SIZE 560-630

## AHV-Δ series, 6KV

| TYPE | A | AA | AB | AC | AD | B | BA | BB | C |
|---|---|---|---|---|---|---|---|---|---|
| AHV-Δ 560-4 | 1000 | 170 | 1130 | 1350 | 1060 | 1400 | 690 | 1880 | 500 |
| AHV-Δ 560-6-12 | 1000 | 170 | 1130 | 1350 | 1060 | 1400 | 690 | 1880 | 500 |
| AHV-Δ 630-4 | 1120 | 190 | 1260 | 1530 | 1120 | 1600 | 740 | 2150 | 530 |
| AHV-Δ 630-6-12 | 1120 | 190 | 1260 | 1530 | 1120 | 1600 | 740 | 2150 | 530 |

| TYPE | D | E | t | b | HD | J | Jl | K | L |
|---|---|---|---|---|---|---|---|---|---|
| AHV-Δ 560-4 | 150 | 250 | 11.4 | 39.7 | 1380 | 814 | 115 | 42 | 3400 |
| AHV-Δ 560-6-12 | 160 | 300 | 12.4 | 42.8 | 1380 | 814 | 115 | 42 | 3400 |
| AHV-Δ 630-4 | 170 | 300 | 12.4 | 44.2 | 1450 | 879 | 265 | 48 | 3700 |
| AHV-Δ 630-6-12 | 180 | 300 | 12.4 | 45.6 | 1450 | 879 | 265 | 48 | 3700 |

# AHV-Δ & TMKHV-Δ series

Dimension sheet

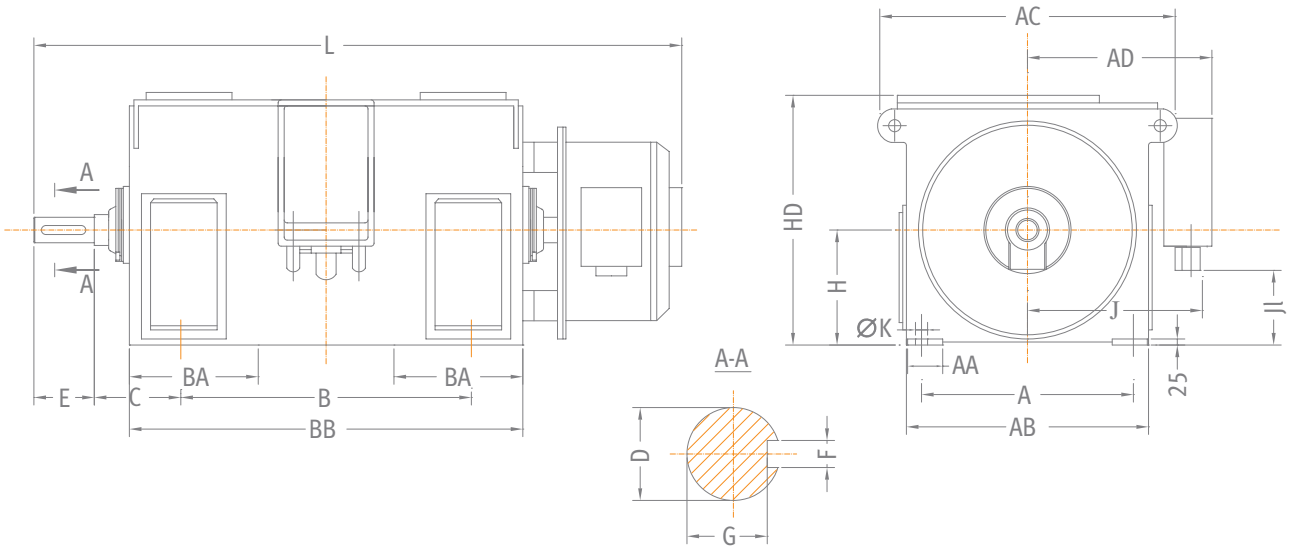


## MOUNTING B3

SIZE 450-500

## AHV-Δ series, 10KV

| TYPE | A | AA | AB | AC | AD | B | BA | BB | C |
|---|---|---|---|---|---|---|---|---|---|
| AHV-Δ 450-4 | 800 | 150 | 910 | 1120 | 940 | 1120 | 600 | 1620 | 355 |
| AHV-Δ 450-6 | 800 | 150 | 910 | 1120 | 940 | 1120 | 600 | 1620 | 355 |
| AHV-Δ 500-4 | 900 | 150 | 1010 | 1220 | 990 | 1250 | 655 | 1730 | 475 |
| AHV-Δ 500-6-10 | 900 | 150 | 1010 | 1220 | 990 | 1250 | 655 | 1730 | 475 |

| TYPE | D | E | F | G | HD | J | Jl | K | L |
|---|---|---|---|---|---|---|---|---|---|
| AHV-Δ 450-4 | 120 | 210 | 32 | 109 | 935 | 702 | 660 | 35 | 2570 |
| AHV-Δ 450-6 | 130 | 250 | 32 | 119 | 935 | 702 | 660 | 35 | 2610 |
| AHV-Δ 500-4 | 130 | 250 | 32 | 119 | 1040 | 752 | 760 | 42 | 2920 |
| AHV-Δ 500-6-10 | 140 | 250 | 36 | 128 | 1040 | 752 | 760 | 42 | 2920 |

# AHV-Δ & TMKHV-Δ series

Dimension sheet

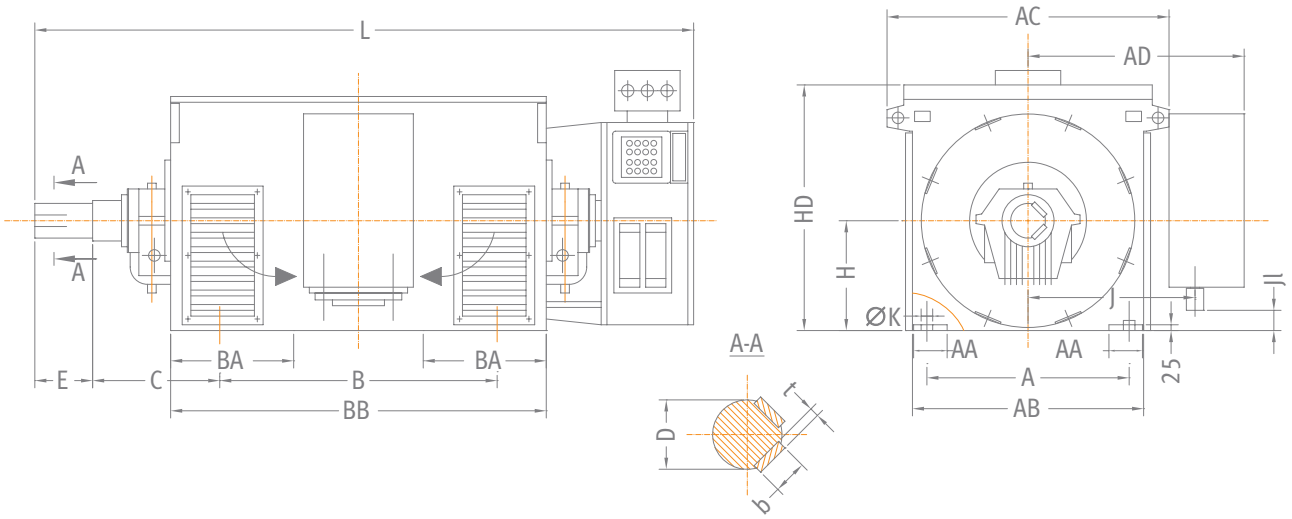


## MOUNTING B3

SIZE 560-630

## AHV-Δ series, 10KV

| TYPE | A | AA | AB | AC | AD | B | BA | BB | C |
|---|---|---|---|---|---|---|---|---|---|
| AHV-Δ 560-4 | 1000 | 170 | 1130 | 1350 | 1060 | 1400 | 690 | 1880 | 500 |
| AHV-Δ 560-6-12 | 1000 | 170 | 1130 | 1350 | 1060 | 1400 | 690 | 1880 | 500 |
| AHV-Δ 630-4 | 1120 | 190 | 1260 | 1530 | 1120 | 1600 | 740 | 2150 | 530 |
| AHV-Δ 630-6-12 | 1120 | 190 | 1260 | 1530 | 1120 | 1600 | 740 | 2150 | 530 |

| TYPE | D | E | t | b | HD | J | Jl | K | L |
|---|---|---|---|---|---|---|---|---|---|
| AHV-Δ 560-4 | 150 | 250 | 11.4 | 39.7 | 1380 | 814 | 115 | 42 | 3400 |
| AHV-Δ 560-6-12 | 160 | 300 | 12.4 | 42.8 | 1380 | 814 | 115 | 42 | 3400 |
| AHV-Δ 630-4 | 170 | 300 | 12.4 | 44.2 | 1450 | 879 | 265 | 48 | 3700 |
| AHV-Δ 630-6-12 | 180 | 300 | 12.4 | 45.6 | 1450 | 879 | 265 | 48 | 3700 |

# TMKHV–Δ series

6kV, 10kV medium sized three-phase asynchronus morors (H355-630)

## Basic Data

**Note:** TMKHV – Δ means the three-phase AC medium voltage slip ring motor, with air to air heat exchanger.

## Structure declaration

TMKHV-Δ 500 L - 4

- **No of Poles**
- **Code of core Length**
- **Centerline Height**
- **Code of Motor Series** (wound rotor type with air to air coder)

Adopting welding steel plate to make the box type frame have features as light weight and enough rigidity . Stator winding adopts F class insulation and its end adopts firm binding. The whole stator adopts solvent-free varnish Vacuum Pressure Impregnation (VPI) to ensure the stator has excellent electric properly and humidity resistance.

Rotor is made of cast aluminum or copper bar. Aluminum rotor is made of pure aluminum bar wedging copper rotor enhances the entirely of rotor. Wound rotor adopts F class insulating material and solvent-free varnish Vacuum Pressure Impregnation (VPI). The motor adopts rolling bearing according to the output power and rotary speed. Bearing protection grade normally is IP55. If the motor's protect grade increases, so does the bearings. Rolling bearing adopts lubricating grease and its grease charger and discharger can be operated without stopping the motor. The junction box is of IP55 protection grade and it is usually mounted on the motor's right side (viewed from shaft extension end). It is also can be mounted on the left side and its outlets have four optional orientations (up, down, left and right orientation). Separated grounding unit is available in main junction box too.

## Notice for selecting motors:

Please specify these technical data (for instance):
Type of motor: (TMKHV – Δ 500 – 4)
Rated frequency: (50 Hz)
Rated output power: (1000 KW)
Rated voltage: (6 kV)
Number of poles: (4 Poles)
Protection grade: (IP55)
Cooling method: (IC611)
Mounting type: (IM B3)
Rotary direction: Clockwise (viewed from the driving end).
Junction box: Right side (viewed from the driving end).

# TMKHV–Δ series

6kV, 10kV medium sized three-phase asynchronus morors (H355-630)

**IP55, 4 POLES-1.500 Rpm**
6.000 V Y/50Hz
Insulation class F

| TYPE | Rated output (kW) | Rated current (A) | Speed (r\min) | Efficiency (%) | Power Factor (cosφ) | Mmax Mn | Rotor voltage (V) | Rotor current (A) | J motor (Kgm²) | Weight (kg) |
|---|---|---|---|---|---|---|---|---|---|---|
| TMKHV-Δ 355-4 | 185 | 22.5 | 1475 | 92.7 | 0.853 | 2.22 | 302 | 388.8 | 5.8 | 2620 |
| TMKHV-Δ 355-4 | 200 | 24.2 | 1477 | 93.0 | 0.855 | 2.3 | 330 | 383.2 | 6.3 | 2780 |
| TMKHV-Δ 355-4 | 220 | 26.4 | 1478 | 93.3 | 0.860 | 2.34 | 364 | 381.1 | 6.9 | 2920 |
| TMKHV-Δ 400-4 | 250 | 30.2 | 1482 | 92.9 | 0.858 | 3.47 | 399 | 389.7 | 10.4 | 3080 |
| TMKHV-Δ 400-4 | 280 | 33.5 | 1482 | 93.2 | 0.864 | 3.42 | 432 | 401.8 | 11.2 | 3230 |
| TMKHV-Δ 400-4 | 315 | 37.5 | 1483 | 93.4 | 0.865 | 3.42 | 472 | 413.4 | 12.1 | 3390 |
| TMKHV-Δ 400-4 | 355 | 41.7 | 1483 | 93.7 | 0.875 | 3.38 | 520 | 421.8 | 13.5 | 3530 |
| TMKHV-Δ 400-4 | 400 | 47.4 | 1484 | 93.9 | 0.865 | 3.52 | 577 | 426.9 | 14.3 | 3680 |
| TMKHV-Δ 450-4 | 450 | 51.9 | 1481 | 93.8 | 0.889 | 2.72 | 636 | 440.5 | 19.2 | 3830 |
| TMKHV-Δ 450-4 | 500 | 57.7 | 1482 | 94.0 | 0.887 | 2.8 | 699 | 443.6 | 20.6 | 3900 |
| TMKHV-Δ 450-4 | 560 | 64.1 | 1483 | 94.3 | 0.892 | 2.85 | 778 | 445.2 | 22.9 | 3960 |
| TMKHV-Δ 450-4 | 630 | 72.1 | 1484 | 94.5 | 0.890 | 2.98 | 876 | 443.4 | 25.2 | 4040 |
| TMKHV-Δ 500-4 | 710 | 81.4 | 1486 | 94.4 | 0.890 | 3.09 | 757 | 577.8 | 35.3 | 5300 |
| TMKHV-Δ 500-4 | 800 | 90.6 | 1486 | 94.6 | 0.899 | 2.98 | 821 | 599.5 | 39 | 5480 |
| TMKHV-Δ 500-4 | 900 | 102 | 1487 | 94.8 | 0.896 | 3.01 | 895 | 617.2 | 41.2 | 5640 |
| TMKHV-Δ 500-4 | 1000 | 114.1 | 1487 | 94.9 | 0.889 | 3.14 | 984 | 622.3 | 43.4 | 5790 |
| TMKHV-Δ 560-4 | 1120 | 125.4 | 1486 | 94.7 | 0.908 | 2.76 | 1238 | 559 | 68.6 | 7800 |
| TMKHV-Δ 560-4 | 1250 | 139.5 | 1487 | 94.8 | 0.909 | 2.83 | 1362 | 565.3 | 74 | 7940 |
| TMKHV-Δ 560-4 | 1400 | 155.8 | 1487 | 95.0 | 0.910 | 2.93 | 1514 | 567.8 | 80.6 | 8100 |
| TMKHV-Δ 630-4 | 1600 | 177.7 | 1489 | 95.2 | 0.910 | 2.69 | 1316 | 748 | 112.3 | 9200 |
| TMKHV-Δ 630-4 | 1800 | 198.9 | 1490 | 95.4 | 0.913 | 2.71 | 1449 | 762.6 | 122.5 | 9330 |
| TMKHV-Δ 630-4 | 2000 | 220.3 | 1490 | 95.5 | 0.915 | 2.64 | 1565 | 784 | 132.7 | 9500 |

**IP55, 4 POLES-1.500 Rpm**
10.000 V Y/50Hz
Insulation class F

| TYPE | Rated output (kW) | Rated current (A) | Speed (r\min) | Efficiency (%) | Power Factor (cosφ) | Mmax Mn | Rotor voltage (V) | Rotor current (A) | J motor (Kgm²) | Weight (kg) |
|---|---|---|---|---|---|---|---|---|---|---|
| TMKHV-Δ 450-4 | 280 | 20.6 | 1480.4 | 92.3 | 0.849 | 2.99 | 452 | 389.1 | 12.5 | 3640 |
| TMKHV-Δ 450-4 | 315 | 22.7 | 1478.5 | 92.5 | 0.866 | 2.72 | 467 | 424.8 | 13.3 | 3660 |
| TMKHV-Δ 450-4 | 355 | 25.4 | 1478.6 | 92.8 | 0.870 | 2.68 | 507 | 440.7 | 14.3 | 3720 |
| TMKHV-Δ 450-4 | 400 | 29 | 1480.8 | 93.0 | 0.857 | 2.89 | 576 | 433.8 | 15.4 | 3780 |
| TMKHV-Δ 450-4 | 450 | 32.4 | 1481.5 | 93.4 | 0.859 | 2.93 | 635 | 441.5 | 16.7 | 3830 |
| TMKHV-Δ 450-4 | 500 | 35.9 | 1482.5 | 93.6 | 0.860 | 3.01 | 706 | 439.8 | 18.4 | 3900 |
| TMKHV-Δ 500-4 | 560 | 39.6 | 1486.8 | 93.4 | 0.874 | 3.27 | 831 | 418.5 | 32.6 | 5000 |
| TMKHV-Δ 500-4 | 630 | 44.2 | 1486.7 | 93.7 | 0.878 | 3.22 | 895 | 436.2 | 34.8 | 5150 |
| TMKHV-Δ 500-4 | 710 | 49.1 | 1486.7 | 94.0 | 0.889 | 3.12 | 972 | 452 | 38.4 | 5300 |
| TMKHV-Δ 500-4 | 800 | 55 | 1487 | 94.3 | 0.890 | 3.14 | 1061 | 465.1 | 41.2 | 5480 |
| TMKHV-Δ 560-4 | 900 | 61.6 | 1485.2 | 94.4 | 0.893 | 2.73 | 972 | 574.2 | 49.7 | 7300 |
| TMKHV-Δ 560-4 | 1000 | 68.4 | 1485.8 | 94.6 | 0.893 | 2.79 | 1060 | 583.2 | 52.8 | 7550 |
| TMKHV-Δ 560-4 | 1120 | 76.4 | 1486.3 | 94.8 | 0.894 | 2.85 | 1166 | 591.9 | 57 | 7800 |
| TMKHV-Δ 630-4 | 1250 | 85.8 | 1489.6 | 94.8 | 0.887 | 2.91 | 1019 | 755.7 | 87.5 | 8700 |
| TMKHV-Δ 630-4 | 1400 | 96.3 | 1489.9 | 95.0 | 0.884 | 2.96 | 1111 | 774.3 | 92.6 | 8950 |
| TMKHV-Δ 630-4 | 1600 | 109.3 | 1490.1 | 95.2 | 0.888 | 2.92 | 1223 | 802.3 | 101.1 | 9200 |

# TMKHV–Δ series

6kV, 10kV medium sized three-phase asynchronus morors (H355-630)

**IP55, 6 POLES-1.000 Rpm**
6.000 V Y/50Hz
Insulation class F

| TYPE | Rated output (kW) | Rated current (A) | Speed (r\min) | Efficiency (%) | Power Factor (cosφ) | Mmax Mn | Rotor voltage (V) | Rotor current (A) | J motor (Kgm²) | Weight (kg) |
|---|---|---|---|---|---|---|---|---|---|---|
| TMKHV-Δ 400-6 | 185 | 23.7 | 987 | 92.5 | 0.812 | 2.99 | 337 | 343.2 | 13.6 | 3470 |
| TMKHV-Δ 400-6 | 200 | 25.7 | 987 | 92.7 | 0.808 | 3.03 | 361 | 345.8 | 14.3 | 3620 |
| TMKHV-Δ 400-6 | 220 | 28 | 987 | 93.5 | 0.810 | 3.01 | 388 | 350 | 15.4 | 3760 |
| TMKHV-Δ 400-6 | 250 | 31.2 | 987 | 93.2 | 0.829 | 2.83 | 422 | 369.1 | 17.2 | 3910 |
| TMKHV-Δ 400-6 | 280 | 35 | 987 | 93.4 | 0.826 | 2.84 | 460 | 378.5 | 18.3 | 4060 |
| TMKHV-Δ 450-6 | 315 | 37.9 | 987 | 93.8 | 0.852 | 2.68 | 547 | 358.8 | 21.7 | 4250 |
| TMKHV-Δ 450-6 | 355 | 42.7 | 987 | 93.9 | 0.852 | 2.66 | 596 | 370.3 | 23.3 | 4410 |
| TMKHV-Δ 450-6 | 400 | 48.2 | 987 | 94.1 | 0.849 | 2.69 | 655 | 378.7 | 24.9 | 4560 |
| TMKHV-Δ 450-6 | 450 | 54.1 | 988 | 94.3 | 0.849 | 2.71 | 728 | 382.7 | 27.5 | 4720 |
| TMKHV-Δ 500-6 | 500 | 58.7 | 989 | 94.3 | 0.870 | 2.37 | 660 | 471.9 | 44.9 | 5600 |
| TMKHV-Δ 500-6 | 560 | 66.1 | 989 | 94.5 | 0.863 | 2.46 | 732 | 474.4 | 47.9 | 5750 |
| TMKHV-Δ 500-6 | 630 | 74.3 | 990 | 94.5 | 0.863 | 2.53 | 824 | 473 | 53 | 5910 |
| TMKHV-Δ 500-6 | 710 | 83.4 | 991 | 94.7 | 0.865 | 2.64 | 943 | 464.3 | 59.9 | 6060 |
| TMKHV-Δ 560-6 | 800 | 94.3 | 991 | 94.7 | 0.862 | 2.73 | 979 | 504 | 86.1 | 7650 |
| TMKHV-Δ 560-6 | 900 | 105.2 | 991 | 94.9 | 0.867 | 2.62 | 1051 | 528.8 | 92.8 | 7900 |
| TMKHV-Δ 560-6 | 1000 | 115.9 | 991 | 95.1 | 0.874 | 2.54 | 1133 | 545.1 | 101.1 | 8040 |
| TMKHV-Δ 630-6 | 1120 | 129.8 | 992 | 95.3 | 0.872 | 2.61 | 1230 | 560 | 137.1 | 8900 |
| TMKHV-Δ 630-6 | 1250 | 144 | 993 | 95.4 | 0.875 | 2.58 | 1342 | 571.9 | 149.7 | 9050 |
| TMKHV-Δ 630-6 | 1400 | 161 | 992 | 95.5 | 0.876 | 2.6 | 1477 | 581.5 | 158.6 | 9210 |

**IP55, 6 POLES-1.000 Rpm**
10.000 V Y/50Hz
Insulation class F

| Type | Rated output (kW) | Rated current (A) | Speed (r\min) | Efficiency (%) | Power Factor (cosφ) | Mmax Mn | Rotor voltage (V) | Rotor current (A) | J motor (Kgm²) | Weight (kg) |
|---|---|---|---|---|---|---|---|---|---|---|
| TMKHV-Δ 450-6 | 220 | 17.4 | 986.8 | 92.2 | 0.792 | 2.71 | 416 | 333.1 | 16.3 | 3950 |
| TMKHV-Δ 450-6 | 250 | 19.3 | 986.6 | 92.6 | 0.807 | 2.61 | 447 | 351.6 | 17.6 | 4050 |
| TMKHV-Δ 450-6 | 280 | 21.4 | 986.4 | 92.9 | 0.814 | 2.51 | 482 | 365.8 | 19 | 4150 |
| TMKHV-Δ 450-6 | 315 | 23.9 | 986.3 | 93.1 | 0.816 | 2.45 | 522 | 379.7 | 20.4 | 4250 |
| TMKHV-Δ 500-6 | 355 | 26.8 | 989.6 | 92.8 | 0.824 | 3.34 | 682 | 323.7 | 35.3 | 5150 |
| TMKHV-Δ 500-6 | 400 | 29.7 | 989.3 | 93.1 | 0.835 | 3.19 | 728 | 341.4 | 37.7 | 5300 |
| TMKHV-Δ 500-6 | 450 | 32.7 | 988.9 | 93.4 | 0.851 | 3 | 782 | 357.6 | 41.7 | 5450 |
| TMKHV-Δ 500-6 | 500 | 36.1 | 989 | 93.7 | 0.855 | 2.96 | 843 | 367.9 | 44.9 | 5600 |
| TMKHV-Δ 500-6 | 560 | 40.4 | 989.1 | 93.9 | 0.852 | 2.96 | 913 | 379.9 | 47.3 | 5750 |
| TMKHV-Δ 560-6 | 630 | 45.5 | 989.1 | 94.1 | 0.849 | 2.68 | 869 | 451 | 58.8 | 7250 |
| TMKHV-Δ 560-6 | 710 | 51 | 989 | 94.3 | 0.852 | 2.62 | 936 | 471.7 | 62.6 | 7450 |
| TMKHV-Δ 560-6 | 800 | 57.1 | 989 | 94.5 | 0.857 | 2.56 | 1014 | 490 | 67.6 | 7650 |
| TMKHV-Δ 560-6 | 900 | 63.7 | 989 | 94.7 | 0.862 | 2.52 | 1108 | 504.4 | 73.7 | 7900 |
| TMKHV-Δ 630-6 | 1000 | 71.7 | 990 | 94.6 | 0.852 | 2.69 | 976 | 634.2 | 128 | 8650 |
| TMKHV-Δ 630-6 | 1120 | 79.6 | 990 | 94.8 | 0.858 | 2.62 | 1059 | 654.7 | 139.8 | 8900 |
| TMKHV-Δ 630-6 | 1250 | 88.4 | 990.3 | 94.9 | 0.860 | 2.61 | 1156 | 668.5 | 151.5 | 9050 |

# TMKHV–Δ series

6kV, 10kV medium sized three-phase asynchronus morors (H355-630)

**IP55, 8 POLES-750 Rpm**
6.000 V Y/50Hz
Insulation class F

| Type | Rated output (kW) | Rated current (A) | Speed (r\min) | Efficiency (%) | Power Factor (cosφ) | Mmax Mn | Rotor voltage (V) | Rotor current (A) | J motor (Kgm²) | Weight (kg) |
|---|---|---|---|---|---|---|---|---|---|---|
| TMKHV-Δ 400-8 | 185 | 24.5 | 734 | 91.6 | 0.794 | 2.32 | 290 | 405.6 | 19.6 | 3470 |
| TMKHV-Δ 400-8 | 200 | 26.8 | 736 | 92.0 | 0.781 | 2.55 | 332 | 380.4 | 21.9 | 3620 |
| TMKHV-Δ 450-8 | 220 | 28.9 | 740 | 92.6 | 0.790 | 2.95 | 470 | 292.1 | 29.6 | 3800 |
| TMKHV-Δ 450-8 | 250 | 32.4 | 739 | 92.8 | 0.800 | 2.82 | 507 | 308 | 31.8 | 3950 |
| TMKHV-Δ 450-8 | 280 | 36.2 | 739 | 93.0 | 0.801 | 2.79 | 549 | 318.2 | 34 | 4090 |
| TMKHV-Δ 450-8 | 315 | 40.1 | 739 | 93.2 | 0.810 | 2.7 | 600 | 327.7 | 37.5 | 4250 |
| TMKHV-Δ 500-8 | 355 | 45 | 741 | 93.6 | 0.810 | 2.64 | 550 | 402.1 | 55.6 | 5050 |
| TMKHV-Δ 500-8 | 400 | 50.6 | 742 | 93.8 | 0.810 | 2.63 | 600 | 414.8 | 59.5 | 5250 |
| TMKHV-Δ 500-8 | 450 | 56.3 | 742 | 94.0 | 0.818 | 2.58 | 660 | 423.3 | 65.7 | 5450 |
| TMKHV-Δ 500-8 | 500 | 61.8 | 742 | 94.2 | 0.826 | 2.57 | 735 | 421.7 | 74.4 | 5650 |
| TMKHV-Δ 560-8 | 560 | 68.1 | 741 | 94.3 | 0.839 | 2.18 | 663 | 529.5 | 91.4 | 7350 |
| TMKHV-Δ 560-8 | 630 | 76.5 | 741 | 94.5 | 0.838 | 2.23 | 736 | 534.3 | 98.6 | 7540 |
| TMKHV-Δ 560-8 | 710 | 86.3 | 742 | 94.7 | 0.837 | 2.32 | 828 | 533 | 107.5 | 7750 |
| TMKHV-Δ 560-8 | 800 | 97.8 | 743 | 94.8 | 0.830 | 2.46 | 946 | 523 | 118.2 | 7900 |
| TMKHV-Δ 630-8 | 900 | 108.9 | 743 | 94.9 | 0.839 | 2.5 | 1092 | 509.5 | 176.3 | 8600 |
| TMKHV-Δ 630-8 | 1000 | 120 | 743 | 95.0 | 0.844 | 2.43 | 1177 | 525.4 | 191.3 | 8850 |
| TMKHV-Δ 630-8 | 1120 | 133.9 | 743 | 95.2 | 0.846 | 2.38 | 1276 | 542.6 | 206.3 | 9050 |

**IP55, 8 POLES-750 Rpm**
10.000 V Y/50Hz
Insulation class F

| Type | Rated output (kW) | Rated current (A) | Speed (r\min) | Efficiency (%) | Power Factor (cosφ) | Mmax Mn | Rotor voltage (V) | Rotor current (A) | J motor (Kgm²) | Weight (kg) |
|---|---|---|---|---|---|---|---|---|---|---|
| TMKHV-Δ 500-8 | 220 | 18.6 | 741.3 | 92.0 | 0.741 | 3.04 | 492 | 280.5 | 33.2 | 4750 |
| TMKHV-Δ 500-8 | 250 | 21.4 | 741.6 | 92.3 | 0.732 | 3.1 | 540 | 289.3 | 34.8 | 4900 |
| TMKHV-Δ 500-8 | 280 | 23.3 | 741.1 | 92.5 | 0.751 | 2.88 | 569 | 308 | 37.2 | 5050 |
| TMKHV-Δ 500-8 | 315 | 25.1 | 740.4 | 92.9 | 0.779 | 2.6 | 603 | 328.1 | 41.2 | 5250 |
| TMKHV-Δ 500-8 | 355 | 28.7 | 741.2 | 93.1 | 0.767 | 2.76 | 678 | 327.1 | 44.3 | 5450 |
| TMKHV-Δ 500-8 | 400 | 32 | 740.9 | 93.4 | 0.773 | 2.65 | 723 | 404 | 46.7 | 5600 |
| TMKHV-Δ 560-8 | 450 | 35.6 | 742.4 | 93.4 | 0.782 | 2.71 | 673 | 416.7 | 75.9 | 7140 |
| TMKHV-Δ 560-8 | 500 | 39.1 | 742.2 | 93.6 | 0.790 | 2.6 | 715 | 435.8 | 80.8 | 7440 |
| TMKHV-Δ 560-8 | 560 | 44.9 | 743 | 93.8 | 0.767 | 2.84 | 815 | 425.5 | 87.3 | 7750 |
| TMKHV-Δ 560-8 | 630 | 49.5 | 742.8 | 94.0 | 0.781 | 2.7 | 879 | 444 | 95.4 | 8000 |
| TMKHV-Δ 630-8 | 710 | 53.1 | 741.6 | 94.4 | 0.818 | 2.64 | 844 | 521.4 | 122.8 | 8650 |
| TMKHV-Δ 630-8 | 800 | 59.1 | 741.5 | 94.6 | 0.826 | 2.54 | 916 | 541.8 | 134.5 | 8900 |
| TMKHV-Δ 630-8 | 900 | 66.1 | 741.5 | 94.8 | 0.829 | 2.5 | 1000 | 558.1 | 146.1 | 9100 |

# TMKHV–Δ series

6kV, 10kV medium sized three-phase asynchronus morors (H355-630)

**IP55, 10 POLES-600 Rpm**
6.000 V Y/50Hz
Insulation class F

| TYPE | Rated output (kW) | Rated current (A) | Speed (r\min) | Efficiency (%) | Power Factor (cosφ) | Mmax Mn | Rotor voltage (V) | Rotor current (A) | J motor (Kgm²) | Weight (kg) |
|---|---|---|---|---|---|---|---|---|---|---|
| TMKHV-Δ 450-10 | 185 | 25.7 | 589 | 91.9 | 0.755 | 2.56 | 465 | 251.7 | 29.4 | 3500 |
| TMKHV-Δ 450-10 | 200 | 27.7 | 589 | 92.1 | 0.756 | 2.58 | 501 | 252.1 | 31.6 | 3640 |
| TMKHV-Δ 450-10 | 220 | 30.4 | 589 | 92.3 | 0.754 | 2.59 | 542 | 255.6 | 33.8 | 3800 |
| TMKHV-Δ 450-10 | 250 | 33.9 | 589 | 92.5 | 0.767 | 2.47 | 592 | 266.2 | 37.3 | 3950 |
| TMKHV-Δ 500-10 | 280 | 36.7 | 591 | 93.6 | 0.785 | 2.23 | 502 | 350.4 | 51.4 | 5490 |
| TMKHV-Δ 500-10 | 315 | 41.1 | 590 | 93.3 | 0.790 | 2.17 | 544 | 366 | 55.2 | 5650 |
| TMKHV-Δ 500-10 | 355 | 46.3 | 591 | 93.5 | 0.789 | 2.15 | 594 | 378 | 59 | 5790 |
| TMKHV-Δ 500-10 | 400 | 51.7 | 591 | 93.7 | 0.795 | 2.11 | 654 | 386.7 | 65.3 | 5940 |
| TMKHV-Δ 560-10 | 450 | 58.9 | 593 | 93.9 | 0.783 | 2.53 | 721 | 388.8 | 91 | 7170 |
| TMKHV-Δ 560-10 | 500 | 66.2 | 593 | 94.1 | 0.773 | 2.66 | 805 | 385.4 | 98.2 | 7330 |
| TMKHV-Δ 560-10 | 560 | 72.2 | 593 | 94.3 | 0.791 | 2.47 | 858 | 406.4 | 107.2 | 7550 |
| TMKHV-Δ 560-10 | 630 | 82.4 | 593 | 94.4 | 0.779 | 2.63 | 979 | 398.4 | 117.9 | 7700 |
| TMKHV-Δ 630-10 | 710 | 90.2 | 593 | 94.5 | 0.802 | 2.56 | 941 | 467.7 | 157.9 | 8600 |
| TMKHV-Δ 630-10 | 800 | 99 | 592 | 94.7 | 0.822 | 2.37 | 1017 | 489.2 | 178.5 | 8850 |
| TMKHV-Δ 630-10 | 900 | 110.5 | 592 | 94.8 | 0.827 | 2.3 | 1102 | 508.1 | 193.4 | 9050 |

**IP55, 10 POLES-600 Rpm**
10.000 V Y/50Hz
Insulation class F

| TYPE | Rated output (kW) | Rated current (A) | Speed (r\min) | Efficiency (%) | Power Factor (cosφ) | Mmax Mn | Rotor voltage (V) | Rotor current (A) | J motor (Kgm²) | Weight (kg) |
|---|---|---|---|---|---|---|---|---|---|---|
| TMKHV-Δ 500-10 | 220 | 19.3 | 592.7 | 91.6 | 0.719 | 2.71 | 425 | 326.5 | 48.6 | 5050 |
| TMKHV-Δ 500-10 | 250 | 21.8 | 593 | 91.8 | 0.721 | 2.72 | 478 | 328.6 | 54.5 | 5250 |
| TMKHV-Δ 500-10 | 280 | 24.1 | 592.8 | 92.1 | 0.727 | 2.63 | 510 | 345 | 57.5 | 5450 |
| TMKHV-Δ 500-10 | 315 | 27.1 | 592.7 | 92.3 | 0.728 | 2.56 | 546 | 362.6 | 60.5 | 5650 |
| TMKHV-Δ 560-10 | 355 | 29.3 | 592.7 | 92.3 | 0.757 | 2.87 | 726 | 306.1 | 86 | 7350 |
| TMKHV-Δ 560-10 | 400 | 32.4 | 592.5 | 92.6 | 0.771 | 2.73 | 779 | 321.6 | 93 | 7540 |
| TMKHV-Δ 560-10 | 450 | 35.7 | 592.3 | 92.9 | 0.783 | 2.61 | 840 | 335.6 | 101.7 | 7750 |
| TMKHV-Δ 560-10 | 500 | 39 | 592.3 | 93.2 | 0.794 | 2.52 | 912 | 343.7 | 112.1 | 7900 |
| TMKHV-Δ 630-10 | 560 | 43.3 | 592.9 | 93.7 | 0.798 | 2.62 | 841 | 415.4 | 147.9 | 8600 |
| TMKHV-Δ 630-10 | 630 | 48.6 | 592.9 | 93.8 | 0.797 | 2.59 | 911 | 431.3 | 156.9 | 8850 |
| TMKHV-Δ 630-10 | 710 | 54.2 | 592.9 | 94.0 | 0.804 | 2.52 | 995 | 444.9 | 171.7 | 9050 |
| TMKHV-Δ 630-10 | 800 | 60.9 | 593.1 | 94.2 | 0.805 | 2.51 | 1095 | 455 | 186.5 | 9200 |

# TMKHV–Δ series

6kV, 10kV medium sized three-phase asynchronus morors (H355-630)

**IP55, 12 POLES-500 Rpm**
6.000 V Y/50Hz
Insulation class F

| TYPE | Rated output (kW) | Rated current (A) | Speed (r\min) | Efficiency (%) | Power Factor (cosφ) | Mmax Mn | Rotor voltage (V) | Rotor current (A) | J motor (Kgm²) | Weight (kg) |
|---|---|---|---|---|---|---|---|---|---|---|
| TMKHV-Δ 450-12 | 185 | 27.2 | 489 | 91.5 | 0.715 | 2.4 | 505 | 233.4 | 38.1 | 3500 |
| TMKHV-Δ 450-12 | 200 | 29.5 | 490 | 91.8 | 0.711 | 2.44 | 547 | 232.3 | 40.9 | 3640 |
| TMKHV-Δ 500-12 | 220 | 31.8 | 491 | 92.3 | 0.721 | 2.36 | 405 | 344.9 | 52.4 | 5170 |
| TMKHV-Δ 500-12 | 250 | 35.4 | 490 | 92.5 | 0.736 | 2.19 | 431 | 370.3 | 56.1 | 5330 |
| TMKHV-Δ 500-12 | 280 | 38.5 | 490 | 92.7 | 0.754 | 2.02 | 462 | 390.2 | 62.2 | 5490 |
| TMKHV-Δ 500-12 | 315 | 44.9 | 491 | 92.9 | 0.727 | 2.27 | 530 | 377.2 | 65.9 | 5650 |
| TMKHV-Δ 560-12 | 355 | 48.5 | 492 | 93.4 | 0.754 | 2.33 | 631 | 354.2 | 87.4 | 7170 |
| TMKHV-Δ 560-12 | 400 | 54.6 | 492 | 93.6 | 0.753 | 2.33 | 694 | 362.5 | 94.5 | 7330 |
| TMKHV-Δ 560-12 | 450 | 61.4 | 492 | 93.8 | 0.753 | 2.35 | 771 | 366.2 | 103.2 | 7470 |
| TMKHV-Δ 630-12 | 500 | 66.1 | 493 | 93.9 | 0.775 | 2.32 | 789 | 397.4 | 163.8 | 8250 |
| TMKHV-Δ 630-12 | 560 | 75.3 | 494 | 94.1 | 0.760 | 2.5 | 892 | 390.5 | 175.6 | 8410 |
| TMKHV-Δ 630-12 | 630 | 83.1 | 493 | 94.3 | 0.774 | 2.37 | 958 | 410.1 | 190.3 | 8570 |

**IP55, 12 POLES-500 Rpm**
10.000 V Y/50Hz
Insulation class F

| Type | Rated output (kW) | Rated current (A) | Speed (r\min) | Efficiency (%) | Power Factor (cosφ) | Mmax Mn | Rotor voltage (V) | Rotor current (A) | J motor (Kgm²) | Weight (kg) |
|---|---|---|---|---|---|---|---|---|---|---|
| TMKHV-Δ 560-12 | 220 | 19.4 | 492.2 | 90.9 | 0.722 | 2.81 | 552 | 252.9 | 79.7 | 7170 |
| TMKHV-Δ 560-12 | 250 | 21.5 | 491.7 | 91.2 | 0.737 | 2.64 | 581 | 273.3 | 83.3 | 7330 |
| TMKHV-Δ 560-12 | 280 | 24.2 | 492.8 | 91.5 | 0.729 | 2.76 | 676 | 261.1 | 90.2 | 7550 |
| TMKHV-Δ 560-12 | 315 | 27.7 | 492.8 | 91.9 | 0.716 | 2.91 | 735 | 269.3 | 98.7 | 7700 |
| TMKHV-Δ 560-12 | 355 | 30.2 | 492.4 | 92.2 | 0.737 | 2.72 | 790 | 283.1 | 108.8 | 7850 |
| TMKHV-Δ 630-12 | 400 | 33.7 | 493.7 | 92.9 | 0.737 | 2.84 | 738 | 339.1 | 145.3 | 8600 |
| TMKHV-Δ 630-12 | 450 | 32 | 494.1 | 93.6 | 0.867 | 2.74 | 819 | 342.8 | 154.3 | 8850 |
| TMKHV-Δ 630-12 | 500 | 40.9 | 493.5 | 93.4 | 0.757 | 2.63 | 853 | 367 | 169 | 9050 |
| TMKHV-Δ 630-12 | 560 | 45.2 | 493.5 | 93.6 | 0.764 | 2.56 | 925 | 379.2 | 183.7 | 9200 |

# TMKHV–Δ series

Dimension sheet

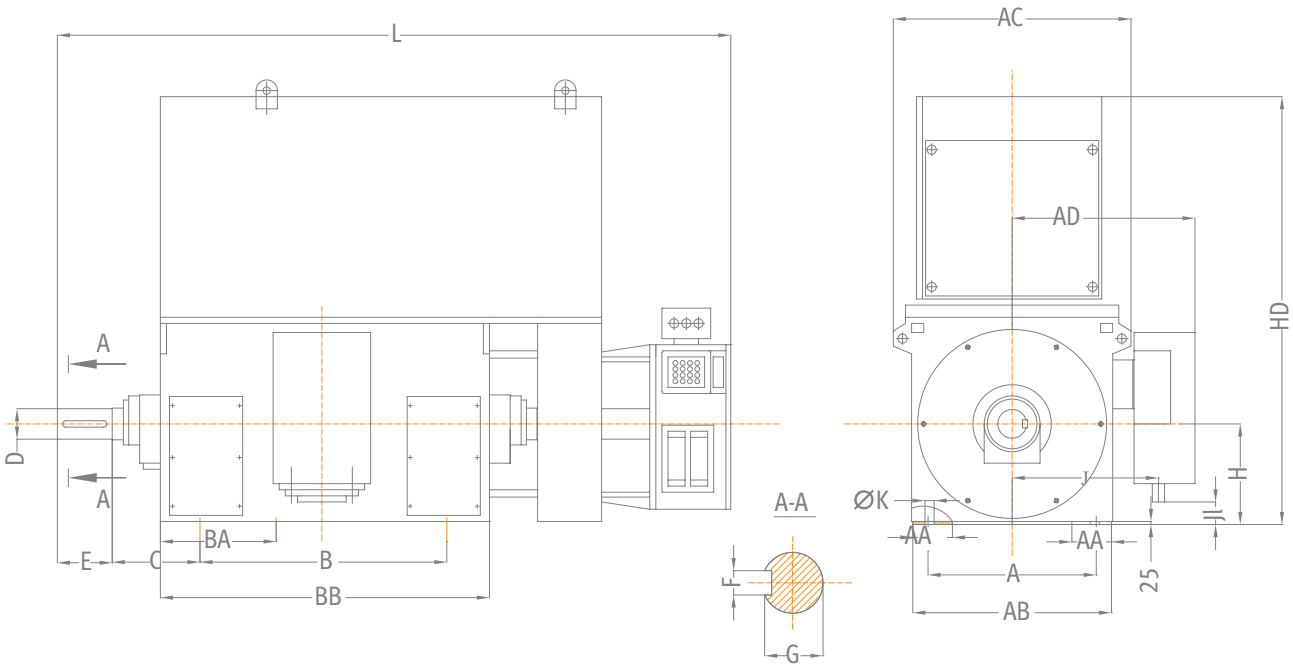


## MOUNTING B3

SIZE 355-500

## TMKHV–Δ series, 6KV

| TYPE | A | AA | AB | AC | AD | B | BA | BB | C |
|---|---|---|---|---|---|---|---|---|---|
| TMKHV Δ 355-4-6 | 630 | 130 | 770 | 965 | 745 | 900 | 565 | 1420 | 315 |
| TMKHV Δ 400-4-8 | 710 | 130 | 810 | 1010 | 760 | 1000 | 565 | 1510 | 375 |
| TMKHV Δ 400-8 | 710 | 130 | 810 | 1010 | 760 | 1000 | 565 | 1510 | 375 |
| TMKHV Δ 450-4 | 800 | 150 | 910 | 1120 | 810 | 1120 | 600 | 1620 | 355 |
| TMKHV Δ 450-6 | 800 | 150 | 910 | 1120 | 810 | 1120 | 600 | 1620 | 355 |
| TMKHV Δ 450-8-12 | 800 | 150 | 910 | 1120 | 810 | 1120 | 600 | 1620 | 355 |
| TMKHV Δ 500-4 | 900 | 150 | 1010 | 1220 | 860 | 1250 | 655 | 1730 | 475 |
| TMKHV Δ 500-6 | 900 | 150 | 1010 | 1220 | 860 | 1250 | 655 | 1730 | 475 |
| TMKHV Δ 500-8-12 | 900 | 150 | 1010 | 1220 | 860 | 1250 | 655 | 1730 | 475 |

| TYPE | D | E | F | G | HD | J | Jl | K | L |
|---|---|---|---|---|---|---|---|---|---|
| TMKHV Δ 355-4-6 | 100 | 210 | 28 | 90 | 1500 | 587 | 55 | 28 | 2550 |
| TMKHV Δ 400-4-8 | 110 | 210 | 28 | 100 | 1700 | 607 | 85 | 35 | 2690 |
| TMKHV Δ 400-8 | 110 | 210 | 28 | 100 | 1700 | 607 | 85 | 35 | 2760 |
| TMKHV Δ 450-4 | 120 | 210 | 32 | 109 | 1900 | 657 | 185 | 35 | 2930 |
| TMKHV Δ 450-6 | 130 | 250 | 32 | 119 | 1900 | 657 | 185 | 35 | 2930 |
| TMKHV Δ 450-8-12 | 130 | 250 | 32 | 119 | 1900 | 657 | 185 | 35 | 3000 |
| TMKHV Δ 500-4 | 130 | 250 | 32 | 119 | 2200 | 707 | 285 | 42 | 3230 |
| TMKHV Δ 500-6 | 140 | 250 | 36 | 125 | 2200 | 707 | 285 | 42 | 3230 |
| TMKHV Δ 500-8-12 | 140 | 250 | 36 | 125 | 2200 | 707 | 285 | 42 | 3270 |

# TMKHV–Δ series

Dimension sheet

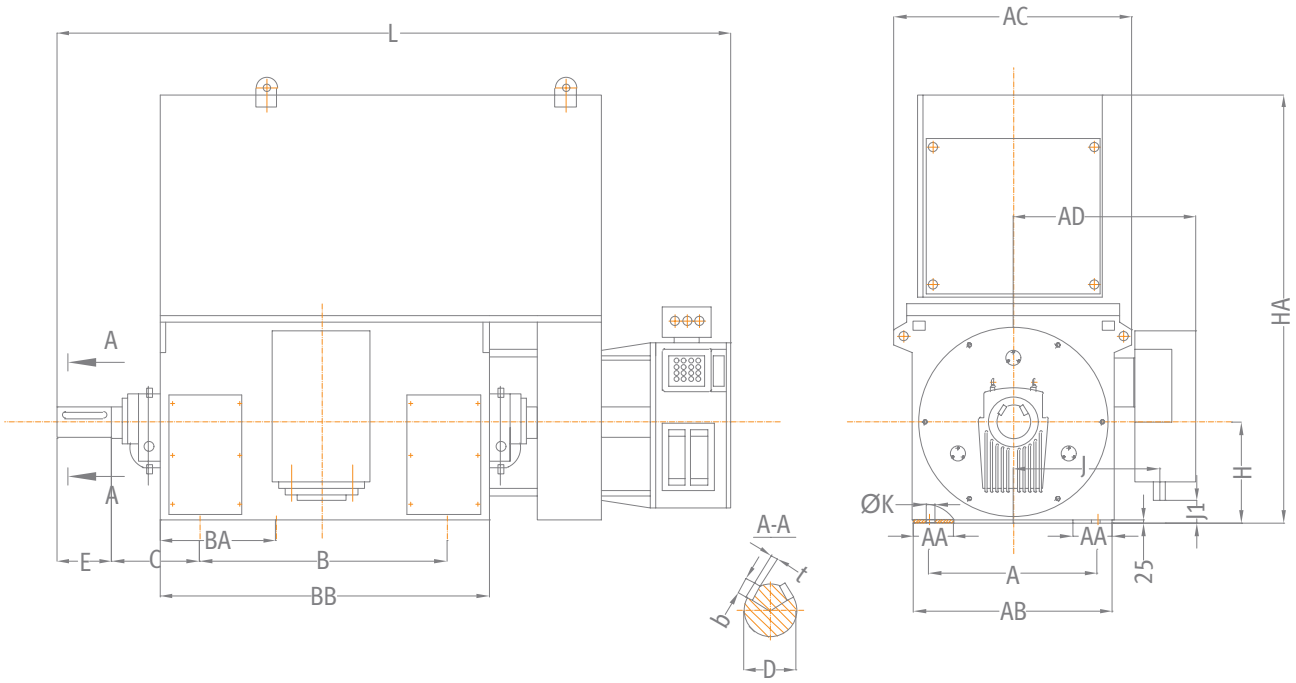


## MOUNTING B3

SIZE 560-630

## TMKHV–Δ series, 6KV

| TYPE | A | AA | AB | AC | AD | B | BA | BB | C |
|---|---|---|---|---|---|---|---|---|---|
| TMKHV-Δ 560-4 | 1000 | 170 | 1130 | 1350 | 1060 | 1400 | 690 | 1880 | 500 |
| TMKHV-Δ 560-6-12 | 1000 | 170 | 1130 | 1350 | 1060 | 1400 | 690 | 1880 | 500 |
| TMKHV-Δ 630-4 | 1120 | 190 | 1260 | 1530 | 1120 | 1600 | 770 | 2150 | 530 |
| TMKHV-Δ 630-6-12 | 1120 | 190 | 1260 | 1530 | 1120 | 1600 | 770 | 2150 | 530 |

| TYPE | D | E | t | b | HD | J | Jl | K | L |
|---|---|---|---|---|---|---|---|---|---|
| TMKHV-Δ 560-4 | 150 | 250 | 11.4 | 39.7 | 2400 | 814 | 115 | 42 | 3500 |
| TMKHV-Δ 560-6-12 | 160 | 300 | 12.4 | 42.8 | 2400 | 814 | 115 | 42 | 3850 |
| TMKHV-Δ 630-4 | 170 | 300 | 12.4 | 44.2 | 2700 | 879 | 265 | 48 | 4120 |
| TMKHV-Δ 630-6-12 | 180 | 300 | 12.4 | 45.6 | 2700 | 879 | 265 | 48 | 4120 |

# TMKHV–Δ series

Dimension sheet

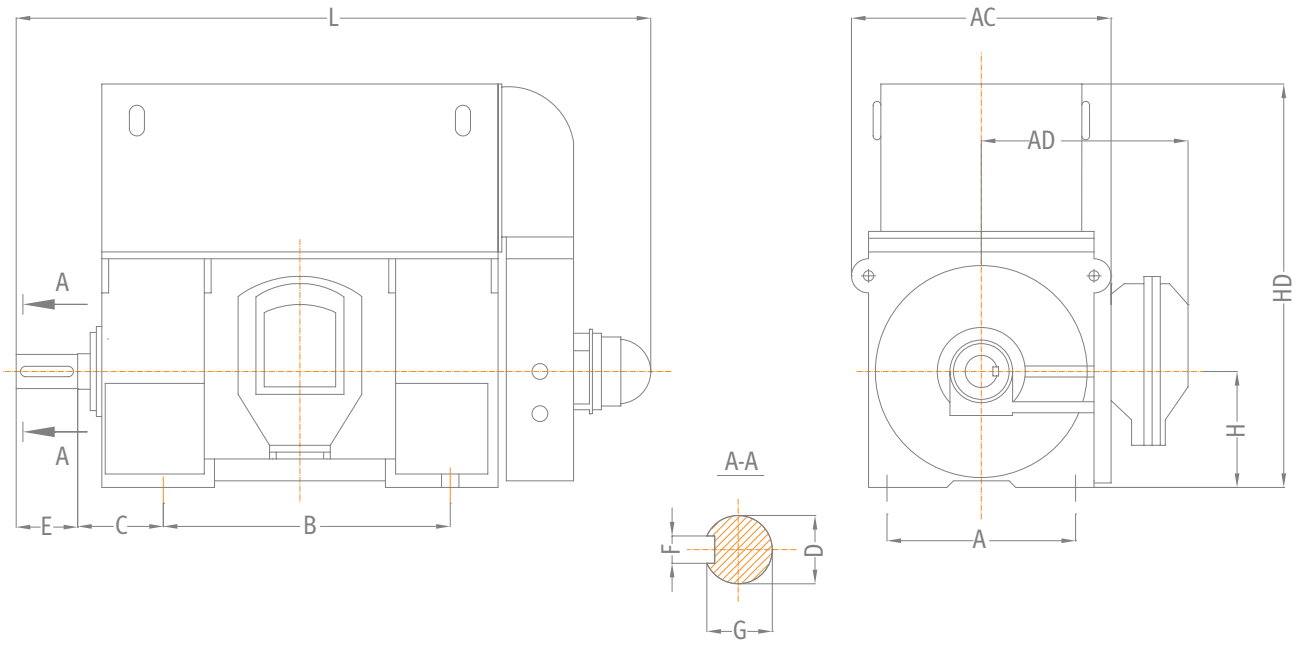


## MOUNTING B3

SIZE 450-500

## TMKHV–Δ series, 10KV

| TYPE | Number of Poles | Mounting dimencion | | | | | | | | | Outlined dimencion | | | |
|---|---|---|---|---|---|---|---|---|---|---|---|---|---|---|
| | | A | B | C | D | E | F | G | H | K | AC | AD | HD | L |
| TMKHV-Δ 450 | 4-6 | 800 | 1120 | 355 | 110 | 210 | 28 | 100 | 450 | 35 | 1300 | 1050 | 1900 | 2800 |
| TMKHV-Δ 500 | 4 | 900 | 1250 | 475 | 120 | 210 | 32 | 109 | 500 | 42 | 1420 | 1080 | 2200 | 3200 |
| | 6-10 | | | | 130 | 250 | 32 | 119 | | | | | | |

# TMKHV–Δ series

Dimension sheet

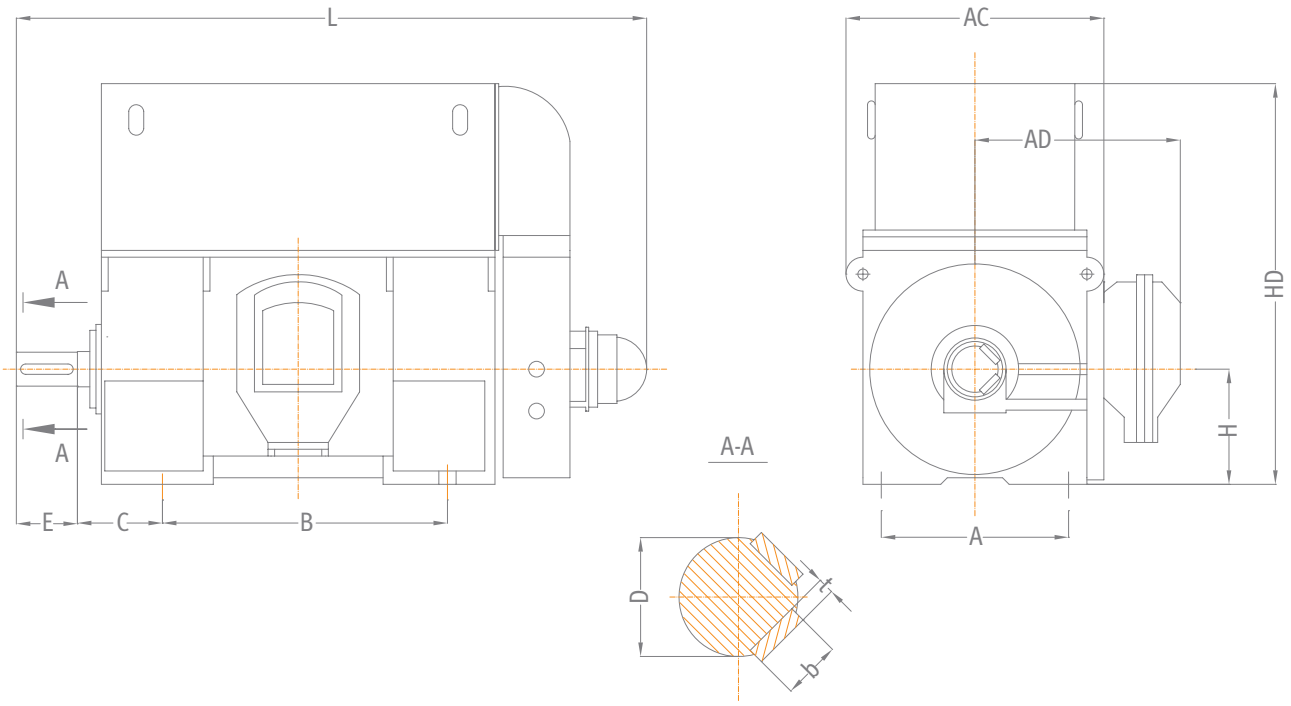


## MOUNTING B3

SIZE 560-630

## TMKHV–Δ series, 10KV

| TYPE | Number of Poles | Mounting dimencion | | | | | | | | |
|---|---|---|---|---|---|---|---|---|---|---|
| | | A | B | C | D | E | t | b | H | K |
| TMKHV-Δ 560 | 4 | 1000 | 1400 | 500 | 150 | 250 | 11.4 | 39.7 | 560 | 42 |
| | 6-12 | | | | 160 | 300 | 12.4 | 42.5 | | |
| TMKHV-Δ 630 | 4 | 1120 | 1600 | 530 | 170 | 300 | 12.4 | 44.2 | 630 | 48 |
| | 6-12 | | | | 180 | 300 | 12.4 | 45.6 | | |

| TYPE | Number of Poles | Outlined dimencion | | | |
|---|---|---|---|---|---|
| | | AC | AD | HD | L |
| TMKHV-Δ 560 | 4 | 1600 | 1100 | 2400 | 3500 |
| | 6-12 | | | | |
| TMKHV-Δ 500 | 4 | 1800 | 1200 | 2700 | 3850 |
| | 6-12 | | | | |

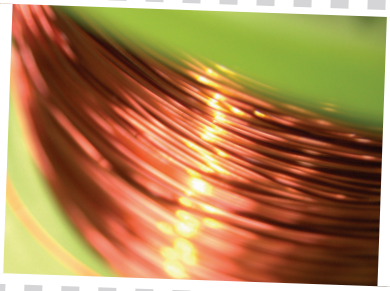

VALIADIS S.A. VALIADIS S.A. VALIADIS S.A. VALIADIS S.A.

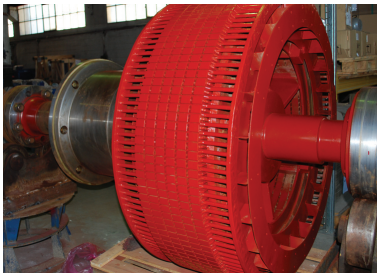
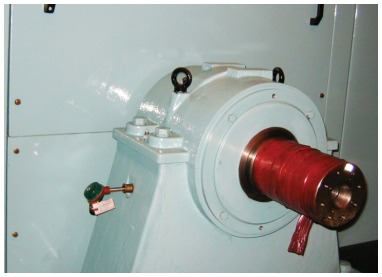

VALIADIS S.A. VALIADIS S.A. VALIADIS S.A. VALIADIS S.A.

VALIADIS S.A. VALIADIS S.A. VALIADIS S.A. VALIADIS S.A.

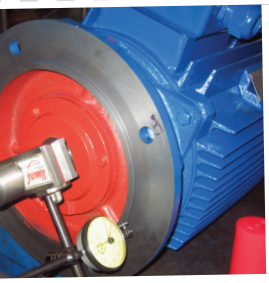

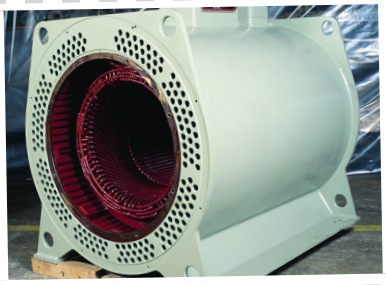

VALIADIS S.A. VALIADIS S.A. VALIADIS S.A. VALIADIS S.A.

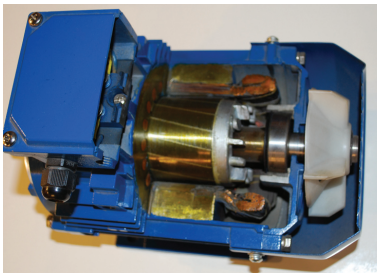
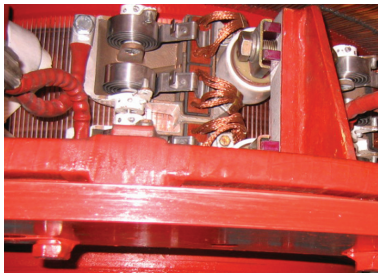

VALIADIS S.A. VALIADIS S.A. VALIADIS S.A. VALIADIS S.A.

# KQR series

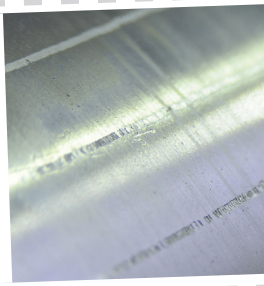

VALIADIS S.A. VALIADIS S.A. VALIADIS S.A.

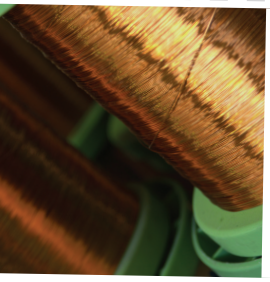
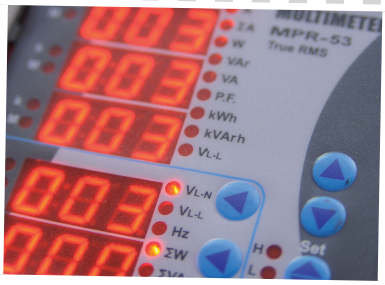

VALIADIS S.A. VALIADIS S.A. VALIADIS S.A. VALIADIS S.A.

VALIADIS S.A. VALIADIS S.A. VALIADIS S.A. VALIADIS S.A.

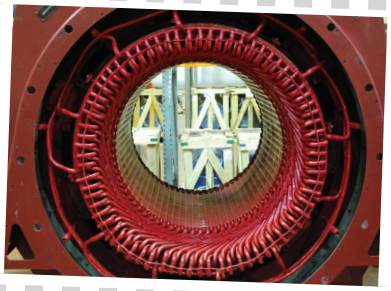

VALIADIS S.A. VALIADIS S.A. VALIADIS S.A. VALIADIS S.A.

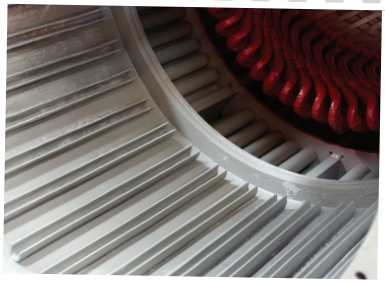
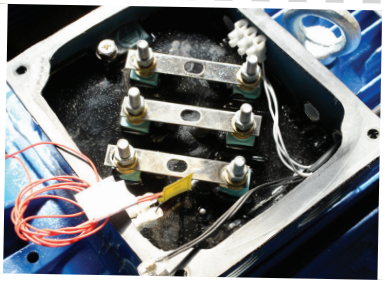

VALIADIS S.A. VALIADIS S.A. VALIADIS S.A. VALIADIS S.A.

# KQR series

Liquid resistance starters

## General introduction

KQR series liquid resistor starter is a new generator starting control device that further improve the starting performance of the large and medium size wound rotor motors. Through connecting liquid resistor in the rotor winding of controlled motor, the starter automatic starts, steplessly, continue working in scheduled time to change the starting current make the motor start smoothly under the condition of perfect starting current. The motor, equipment and power line are protected effectively. Compared to other types starter, this kind of starter have advantage of higher automation, lesser starting current, energy saving and small impact on electric and mechanical etc. features. Especially suitable for the over loading starting. The starter can also start smoothly although at a lower power line voltage, which decrease the capacity of transformer. It is the best starting control device for those over loading equipment such as ball mill, crusher, elevator, compressor, fan, pump etc.

## Performance and features

1. The performance is better than others type starters.
2. Small starting current, which is less 1.3 times of rated current.
3. It can start continuously for 5-10 times.
4. Starting is smooth, mechanical stress impact is little. Motors and driving machineries can be protected effectively.
5. The equipment can be start in lower voltage: 6kV motors and 380V motors can be smoothly started at the voltage 5.5kV and 340V accordingly.
6. The simple and reliable structure. Automatic operation, easy install and maintenance.

# KQR series

## Liquid resistance starters

## Explanation for models

KQR - _ / _

- Rated power of motors controlled (KW)
- Rated current (kA) of starter
- Products code

## Service condition

1. Ambient temperature: 0~+40~C.
2. Relative humidity: no more than 90%.
3. Altitude: no more than 4000m.
4. Installation site: Vertical inclination shall be no more than 5 degree. No fire hazard, explosion risk, conductive dust, corrosive gas and strong vibration exist.

## Technical Parameters

1. Power of motors controlled: 45~10000KW
2. Rotor current of motors controlled: 200~2000A
3. Rotor voltage of motors controlled: 200~2200V
4. Normal working temperature of liquid(~C)~0~70~C
5. Number of starts: 5~10 times

| Specification | Motor power (kW) | Starting time (s) | Starting temperature rise (°C/time) |
|---|---|---|---|
| KQR - 0.2 | ≤200 | 15 | 5 |
| KQR - 0.4 | ≤400 | | 5 |
| KQR - 0.6 | ≤600 | 15~25 | 5 |
| KQR - 1 | ≤1000 | | 5 |
| KQR - 2 | ≤2000 | 20~40 | 8 |
| KQR - 3 | ≤3000 | | 10 |
| KQR - 4 | ≤4000 | 25~60 | 10 |
| KQR - 5 | ≤5000 | | 10 |
| KQR - _ / _ | ›5000 | Special designed according to technical requirements | |

6. Starting current: Is ≤ 1.3In~In is motor rated current~
7. Power supply voltage: 3 phase 380V/420/50Hz

## Working principle

KQR series liquid resistor starter is use special liquid as resistor, introduce a plate electrode in liquid resistor special designed as electrode to connect the winding of motor rotor. As motor starts, a small power servo motor will move the plate electrode to make the liquid resistor (were connected in rotor winding) decreases steplessly to realize the motor smoothly start under lower current.

## Installation

### Installation and connecting:

1) The starter should be installed on the cement base with drain. And the equipment shall be vertical to the installation ground. Cabinet should be fixed stably with channel steel on the installation ground. And there should be an electrical trench under the cabinet.
2) Connecting motor rotor cable with cabinet and the interlocking control line as the wiring diagram and working principle. The cable should bear enough current.
3) Checking the connection and ensure the fastening.
4) Checking the resistance between liquid resistor plates electrodes to earth not to be less than 5MΩ.

### Confect resistance liquid:

a. Inject carbonate sodium powder ~ 2,5 kg in each trough and add pure water in each trough make the liquid level of 3 troughs, to be 15mm below trough cover.
b. Starting lift motor make the plate move several times to mix well the resistance liquid, by setting the red knob switch to =0= and test positions.
3. Trial running
   Observe the starting current if less 1.3 In. If so, the starter can put into use. If not so, the concentration of the resistance liquid should be adjusted according to the part of “operation and maintenance”

## Connections instructions:

a. Install and connect feeder 3 phase line plus N (neutral) 4x2,5 mm² and connect it accordingly to L1, L2, L3 and N on the panel.(see relevant drawing). Connect also earth wire.

b. Connect rotor cable at least 3x300mm² at lowest possible distance to the bar terminals of short circuiting contactor KM2 at the rear of the panel.
c. Preliminary trial of starter itself not connected still to main motor.

Feed the panel 3x380V and N
Try switch with red knob on test and 0 positions (0 position = upwards, test position = downwards-short circuiting).

If movements are opposite, reverse feeders on L1 and L2 in order to achieve correct electrode movement. Timer is adjusted to 20-23 secs.

## Operation instructions:

## Motor ready to start:

KQR liquid starter's red knob switch on 0 position (electrodes upwards)

**Starting:**

Close main motor's high voltage switch.

At the same time turn red knob switch of KQR liquid starter at test position which is the run position. At this position the electrodes will start moving downwards in order to reach short circuiting position via the contractor KM2

Starting operation is completed and the motor is operating normally.

**Stopping the motor:**

Disconnect main motor's high voltage switch.

When the motor stops, turn red knob switch of KQR starter to 0 position, where the electrodes will start moving upwards reaching starting position being ready for the next start of the motor.

## Usage and maintenance

If "power on" lighting , and "allow starting" light off, you should check if the liquid level is well and if the relevant switch and contactor working. The starter will not allow start before "allow starting" light on.

No matter what reasons need to stop the starter, you just put the "stop" switch. Don't allow put off starter power when the main motor working.

In general, the start cabinet can automatically close - down in any fault. So, the start can be repaired in time. But the user should pay special attention to check periodically (half year) the position switch SA1 and SA2 and resistor liquid level. The resistance liquid or water must be added in time if the liquid level is so low (lower than 5+mm up to cover). The protection action must be taken to protect the insulation when add the water or resistance liquid. The resistance liquid should be changed periodically (4-5 years) and clear the electrode plate and insulated cabinet case. The dilute hydrochloric acid is suggested to remove the oxide on the electrode plate. After rinsing the plate and cabinet case, use PVC anti-corrosive glue to daub the case inside face several times. Please don't disassemble the case for cleaning.

If the main motor running current is so small or the starter starts with high temperature in liquid (over 60°C~) contactor point KM2 should be check and guarantee the contact is good. If the start current is so big, that means the liquid resistance is smaller, should add water.

## Ordering instructions

Please providing following information when you place the order:

1. The motor specification, rated power, stator voltage, stator current, rotor voltage and rotor current etc.
2. Features of the equipment driven by the motor.
3. And special requirement, please consult with our company.

# KQR series

## Dimension sheet

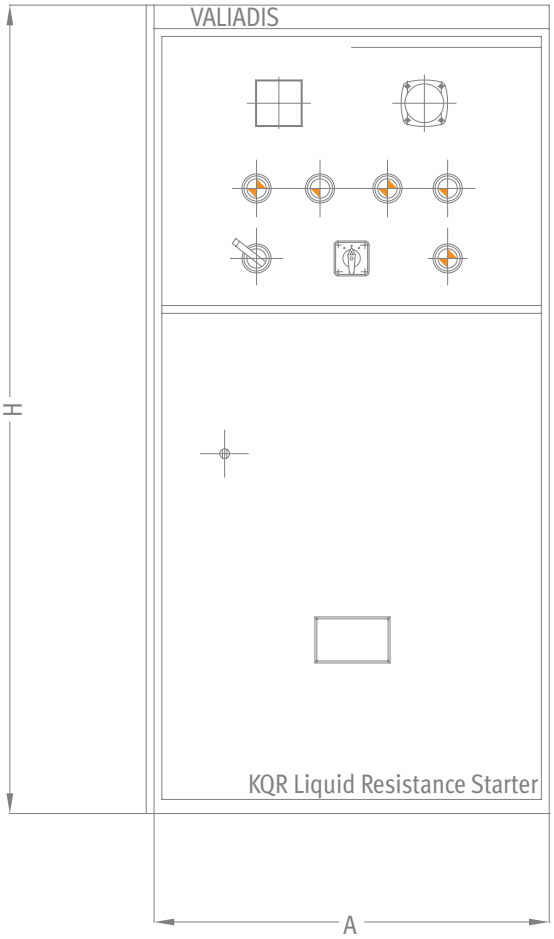


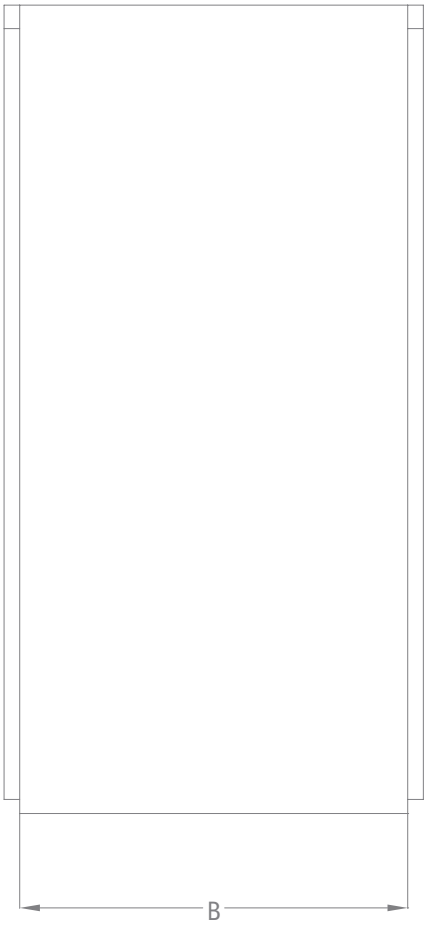


| TYPE | Dimensions in mm | | |
|---|---|---|---|
| | A | B | H |
| KQR-0.2 | 800 | 800 | 1800 |
| KQR-0.4 | 800 | 800 | 1800 |
| KQR-0.6 | 800 | 800 | 2000 |
| KQR-1 | 1000 | 900 | 2000 |
| KQR-2 | 1200 | 960 | 2000 |
| KQR-3 | 1350 | 1500 | 2000 |
| KQR-4 | 1850 | 1500 | 2000 |
| KQR-5 | 2000 | 1500 | 2000 |

# KQR series

Liquid resistance starters

## Power Suply & Digital Inputs - outputs.

| | | |
|---|---|---|
| 1 | L1 | 3 Ph / 380 V / 50 Hz |
| 2 | L2 | |
| 3 | L3 | |
| 4 | N | Neutral |
| 5 | | |
| 6 | | |
| 7 | 1 | 220 V AC 5 A Contact<br>Closed when starter is ready to start. |
| 8 | 2 | |
| 9 | 3 | 220 V AC 5 A Contact<br>Opened when starter is ready to start. |
| 10 | 4 | |
| 11 | 5 | 220 V AC 5 A Contact<br>Closed when starting has been completed |
| 12 | 6 | |
| 13 | 7 | 220 V AC 5 A Contact<br>Opened when starting has been completed |
| 14 | 8 | |
| 15 | 9 | 220 V AC 5 A Contact<br>Opened when starter is in a fault condition. |
| 16 | 10 | |
| 17 | 11 | 220 V AC 5 A Contact<br>Closed when starter is in a fault condition. |
| 18 | 12 | |
| 19 | 101 | Input for remote starting |
| 20 | 103 | |

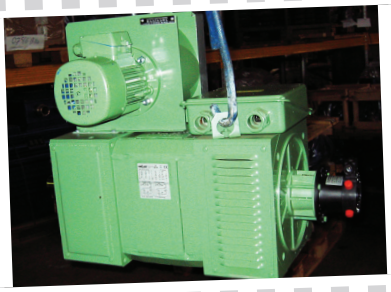
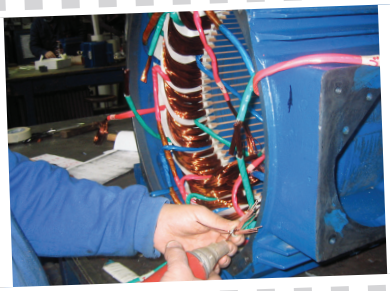

VALIADIS S.A. VALIADIS S.A. VALIADIS S.A. VALIADIS S.A.

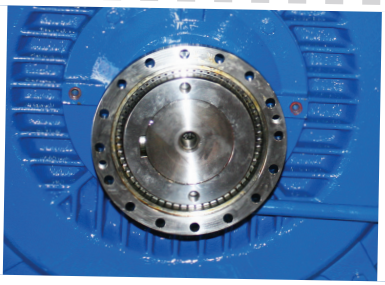

VALIADIS S.A. VALIADIS S.A. VALIADIS S.A. VALIADIS S.A.

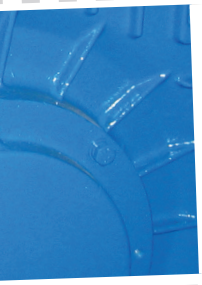
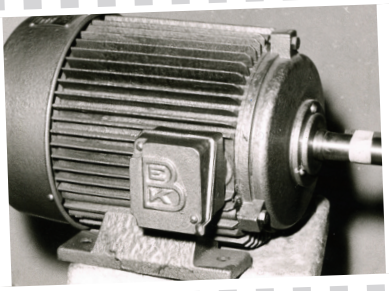
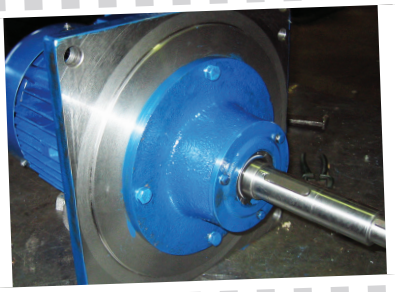

VALIADIS S.A. VALIADIS S.A. VALIADIS S.A. VALIADIS S.A.

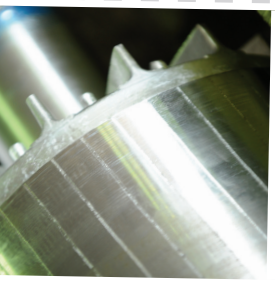
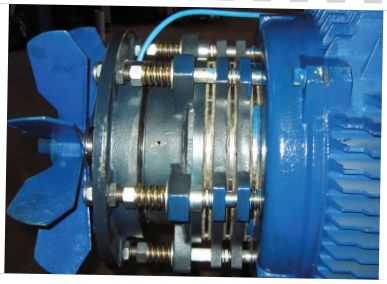

VALIADIS S.A. VALIADIS S.A. VALIADIS S.A. VALIADIS S.A.

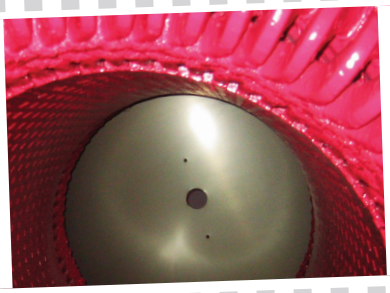
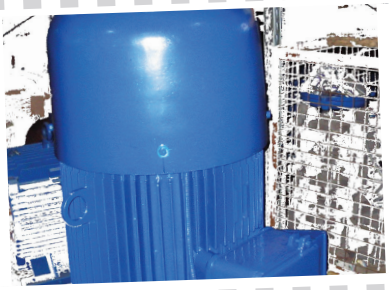

VALIADIS S.A. VALIADIS S.A. VALIADIS S.A. VALIADIS S.A. VAL

# KZR & KZ series

VALADIS & A.P.
3-PHASE ASYNCHRONOUS MOTORS FOR
METALLURGICAL AND HOISTING APPLICATIONS

# KZR & KZ series

Three-phase crane motors

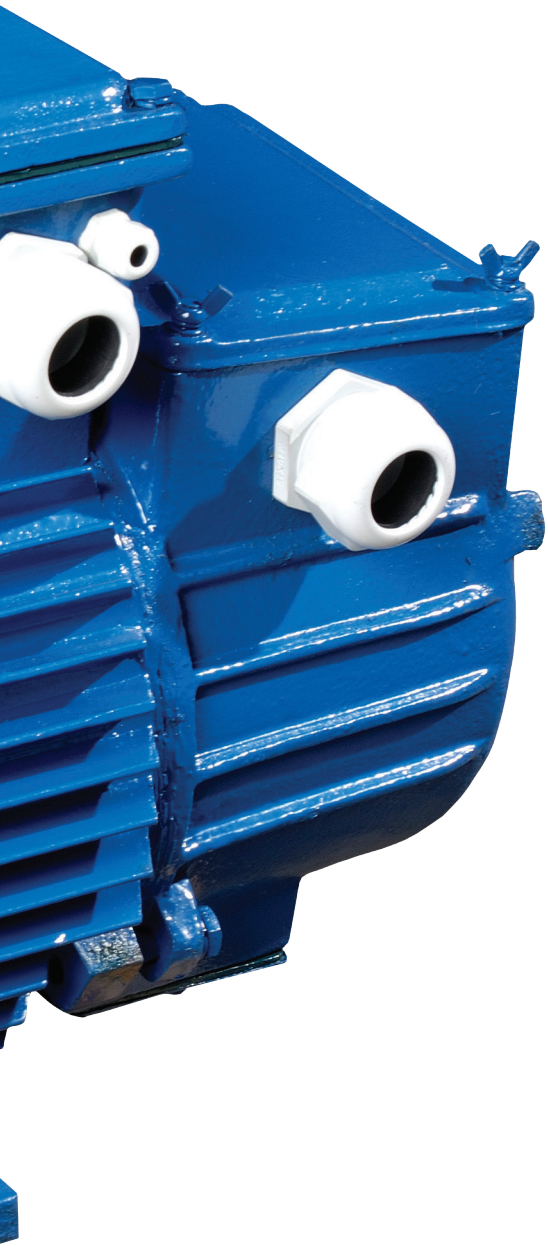

## Introduction

These series of three phase metallurgical industrial and crane motors, with wound or squirrel cage rotor are specially designed to drive metallurgical industrial cranes and other similar machines, it has excellent overload capability and high mechanical strength.
Therefore, it is well suited for short duty cycle, or intermittent periodic duty, and on equipments with frequent starting and braking or are subject to vibration and shock.

The standard range of power output and mounting dimensions complies with the recommended standard of (IEC 72).

The motor can be operated well up to altitude of 1,000m.

There are two classes of insulation, F and H. Class F is applicable to temperature condition not exceeding 40$^0$C. Class H is suitable for metallurgical industrial sites where ambient temperature is below 60$^0$C. Both have the same technical data.

The motors possess a better enclosure, with protection standard of IP44 for normal site condition, and IP55 for metallurgical industrial condition.

Motor's rated voltage and frequency is 380V/50Hz.

# KZR & KZ series

## Three-phase crane motors

## Symbol definitions:

K Z R 132 M1 - 6

- K: Asynchronous motor
- Z: Metallurgical industrial and crane
- R: Wound-rotor (squirrel cage without R)
- 132: Center height – 132 mm
- M1: Iron core length for No 1 M frame
- 6: Number of poles

The basic motor duty is $S_3$ – 40%. See the follow table for the relationship between frame size and rating.

## The relationship between frame size, synchronous speed and power.

| Frame size | | 1000 r / min | 750 r / min | 600 r / min |
|---|---|---|---|---|
| 112 | M | 1.5 | - | - |
| 132 | M1 | 2.2 | - | - |
| | M2 | 3.7 | - | - |
| 160 | M1 | 5.5 | - | - |
| | M2 | 7.5 | - | - |
| | L | 11 | 7.5 | - |
| 180 | L | 15 | 11 | - |
| 200 | L | 22 | 15 | - |
| 225 | M | 30 | 22 | - |
| 250 | M1 | 37 | 30 | - |
| | M2 | 45 | 37 | - |
| 280 | S | 55 | 45 | 37 |
| | M | 75 | 55 | 45 |
| 315 | S | - | 75 | 55 |
| | M | - | 90 | 75 |
| 355 | M | - | - | 90 |
| | L1 | - | - | 110 |
| | L2 | - | - | 132 |
| 400 | L1 | - | - | 160 |
| | L2 | - | - | 200 |

KZ series motors are shown in the dashed line.

# KZR & KZ series

Three-phase crane motors

## Motors duty and technical data

These motors are well suited to intermittent heavy duty operation .It can be classified as the following categories according to different load characteristics:

## Short Time Duty ($S_2$):

Operation is under constant load in fixed time and the motor is resting or deenergizing when the heat balance is not reached. In a period of time , the motor is cooled and the temperature difference between motor and medium is limited within 2K.

Intermittent rate: $FC= \frac{N}{N+R} * 100\%$

N= operation under rated condition. R= at rest and deenergized.

## Intermitted Periodic Duty ($S_3$):

To run according to a series of identical cycles, the running time under constant load and the time of rest deenergized are included in period of one cycle, but the time is shorter and does not make motor to 2 heal balance condition.
The starting current shouldn't be enough to affect the temperature rise obviously.

## Intermitted Period Duty with Starting ($S_4$):

To run according to a series of identical cycles, each cycle is formed by a starting time , a constant load's time and a rest or deenergized time. But the time is short without condition making motor to a heat balance.

Intermittent rate: $FC= \frac{D+N}{D+N+R} * 100\%$

D=starting. N= operation under rated condition.
R= at rest and deenergized.

## Intermittent Periodic Duty with Starting and Electric Braking ($S_5$):

It runs according to a series of identical cycles, there are starting time constant load's time, electric quick braking time and a rest or deenergized time in each cycle, but motor can not reach the condition of heat balance in such short time.

Intermittent rate: $FC= \frac{D+N+F}{D+N+F+R} * 100\%$

D=starting. N= operation under rated condition.
R= at rest and deenergized. F=electric braking

When you choose motor, various conditions of starting and braking have to be contained in to a equivalent data of starts/hour according to equivalent heat, then the motor quota is determined by the equivalent data.

## Conversion

When the touch starting is end, the speed does not exceed 25% of rated, i.e. rated , i.e. four times equal once of starting.

Once electric braking (to brake to one third of rated speed) is equal to 80% starting.

The duty type $S_3$ - 40% is basic duty, the motor technical data is in the Table 3, Table 4-1 and Table 4-2 the data of delivery condition on the name plate only under basic duty. If you need a duty type out of $S_2$ to $S_4$ consullation with manufacturer must be needed.

# KZR & KZ series

Three-phase crane motors

The relationship between equivalent number of starts, number of starts, brakes and starts.

| Duty type | Starting and Braking condition | | | | Equivalent starts/h |
|---|---|---|---|---|---|
| | No of starts/h | No of touch starts/h | No of brakes/h | No of brakes and reverses/h | |
| $S_3$ | 6 | 0 | 0 | 0 | 6 |
| $S_3$ | 4 | 8 | 0 | 0 | |
| $S_3$ | 2 | 8 | 2 | 0 | |
| $S_4$ | 150 | 0 | 0 | 0 | 150 |
| $S_4$ | 100 | 200 | 0 | 0 | |
| $S_5$ | 80 | 0 | 80 | 0 | |
| $S_5$ | 65 | 130 | 65 | 0 | |
| $S_5$ | 30 | 160 | 30 | 30 | |
| $S_4$ | 300 | 0 | 0 | 0 | 300 |
| $S_4$ | 200 | 400 | 0 | 0 | |
| $S_5$ | 160 | 0 | 160 | 0 | |
| $S_5$ | 130 | 260 | 130 | 0 | |
| $S_5$ | 60 | 320 | 60 | 60 | |
| $S_4$ | 600 | 0 | 0 | 0 | 600 |
| $S_4$ | 400 | 800 | 0 | 0 | |
| $S_5$ | 320 | 0 | 320 | 0 | |
| $S_5$ | 260 | 520 | 260 | 0 | |
| $S_5$ | 120 | 640 | 120 | 120 | |

# KZR & KZ series

Three-phase crane motors

## 6 POLES-1.000 Rpm
380 V / 50 Hz

| Duty type | $S_2$ | | | | | | Moment of inertia Jm (kgm²) | Weight (kg) |
|---|---|---|---|---|---|---|---|---|
| FC | 30 minutes | | | 60 minutes | | | | |
| Frame size | KW | $I_1$ (A) | n r / min | KW | $I_1$ (A) | n r/min | | |
| KZ 112M-6 | 1.8 | 4.9 | 892 | 1.5 | 4.25 | 920 | 0.022 | 58 |
| KZ 132M1-6 | 2.5 | 6.5 | 920 | 2.2 | 5.9 | 935 | 0.056 | 80 |
| KZ 132M2-6 | 4 | 9.2 | 915 | 3.7 | 8.8 | 912 | 0.062 | 92 |
| KZ 160M1-6 | 6.3 | 14.1 | 922 | 5.5 | 12.5 | 933 | 0.114 | 119 |
| KZ 160M2-6 | 8.5 | 18 | 943 | 7.5 | 15.9 | 948 | 0.143 | 132 |
| KZ 160L-6 | 15 | 32 | 920 | 11 | 24.6 | 953 | 0.192 | 152 |

## 8 POLES-750 Rpm
380 V / 50 Hz

| Duty type | $S_2$ | | | | | | Moment of inertia Jm (kgm²) | Weight (kg) |
|---|---|---|---|---|---|---|---|---|
| FC | 30 minutes | | | 60 minutes | | | | |
| Frame size | KW | $I_1$ (A) | n r / min | KW | $I_1$ (A) | n r/min | | |
| KZ 160L-8 | 9 | 21.1 | 694 | 7.5 | 18 | 705 | 0.192 | 152 |
| KZ 180L-8 | 13 | 30 | 675 | 11 | 25.8 | 694 | 0.352 | 205 |
| KZ 200L-8 | 18.5 | 40 | 697 | 15 | 33.1 | 710 | 0.622 | 276 |
| KZ 225M-8 | 26 | 53.5 | 701 | 22 | 45.8 | 712 | 0.82 | 347 |
| KZ 250M-8 | 35 | 74 | 681 | 30 | 63.3 | 694 | 1.432 | 462 |

## 6 POLES-1.000 Rpm
380 V / 50 Hz

| Duty type | $S_3$ 6 Starts/h | | | | | | Moment of inertia Jm (kgm²) | Weight (kg) |
|---|---|---|---|---|---|---|---|---|
| FC | 15% | | | 25% | | | | |
| Frame size | KW | I1 (A) | n r / min | KW | I1 (A) | n r/min | | |
| KZ 112M-6 | 2.2 | 6.5 | 810 | 1.8 | 4.9 | 892 | 0.022 | 58 |
| KZ 132M1-6 | 3 | 7.5 | 804 | 2.5 | 6.5 | 920 | 0.056 | 80 |
| KZ 132M2-6 | 5 | 11.6 | 890 | 4 | 9.2 | 915 | 0.062 | 92 |
| KZ 160M1-6 | 7.5 | 16.8 | 903 | 6.3 | 14.1 | 922 | 0.114 | 119 |
| KZ 160M2-6 | 11 | 25.4 | 926 | 8.5 | 18 | 943 | 0.143 | 132 |
| KZ 160L-6 | 15 | 32 | 920 | 13 | 28.7 | 936 | 0.192 | 152 |

## 8 POLES-750 Rpm
380 V / 50 Hz

| Duty type | $S_3$ 6 Starts/h | | | | | | Moment of inertia Jm (kgm²) | Weight (kg) |
|---|---|---|---|---|---|---|---|---|
| FC | 15% | | | 25% | | | | |
| Frame size | KW | I1 (A) | n r / min | KW | I1 (A) | n r/min | | |
| KZ 160L-8 | 11 | 27.4 | 675 | 9 | 21.1 | 694 | 0.192 | 152 |
| KZ 180L-8 | 15 | 35.3 | 654 | 13 | 30 | 675 | 0.352 | 205 |
| KZ 200L-8 | 22 | 47.5 | 686 | 18.5 | 40 | 697 | 0.622 | 276 |
| KZ 225M-8 | 33 | 69 | 687 | 26 | 53.5 | 701 | 0.82 | 347 |
| KZ 250M-8 | 42 | 89 | 663 | 35 | 74 | 681 | 1.432 | 462 |

# KZR & KZ series

Three-phase crane motors

## 6 POLES-1.000 Rpm
380 V / 50 Hz

| Duty type | $S_3$ 6 Starts/h | | | | | | | | Moment of inertia Jm (kgm²) | Weight (kg) |
|---|---|---|---|---|---|---|---|---|---|---|
| FC | 40% | | | | | | | | | |
| Frame size | KW | $I_1$ (A) | n (r/min) | Mmax / Mn | Mst / Mn | Ist / $I_1$ | n% | conn | | |
| KZ 112M-6 | 1.5 | 4.25 | 920 | 2.7 | 2.44 | 4.47 | 69.5 | 0.75 | 0.022 | 58 |
| KZ 132M1-6 | 2.2 | 5.9 | 935 | 2.9 | 3.1 | 5.16 | 74 | 0.76 | 0.056 | 80 |
| KZ 132M2-6 | 3.7 | 8.8 | 912 | 2.8 | 3 | 5.54 | 78 | 0.79 | 0.062 | 92 |
| KZ 160M1-6 | 5.5 | 12.5 | 933 | 2.7 | 2.5 | 4.9 | 80 | 0.82 | 0.114 | 119 |
| KZ 160M2-6 | 7.5 | 15.9 | 948 | 2.9 | 2.4 | 5.52 | 81 | 0.83 | 0.143 | 132 |
| KZ 160L-6 | 11 | 24.6 | 953 | 2.9 | 2.7 | 6.17 | 83 | 0.84 | 0.192 | 152 |

## 8 POLES-750 Rpm
380 V / 50 Hz

| Duty type | $S_3$ 6 Starts/h | | | | | | | | Moment of inertia Jm (kgm²) | Weight (kg) |
|---|---|---|---|---|---|---|---|---|---|---|
| FC | 40% | | | | | | | | | |
| Frame size | KW | $I_1$ (A) | n (r/min) | Mmax / Mn | Mst / Mn | Ist / $I_1$ | n% | conn | | |
| KZ 160L-8 | 7.5 | 18 | 705 | 2.7 | 2.5 | 5.1 | 80 | 0.76 | 0.192 | 152 |
| KZ 180L-8 | 11 | 25.8 | 694 | 2.5 | 2.6 | 4.9 | 81 | 0.79 | 0.352 | 205 |
| KZ 200L-8 | 15 | 33.1 | 710 | 2.8 | 2.7 | 6.1 | 82.5 | 0.8 | 0.622 | 276 |
| KZ 225M-8 | 22 | 45.8 | 712 | 2.9 | 2.9 | 6.2 | 84 | 0.82 | 0.82 | 347 |
| KZ 250M-8 | 30 | 63.3 | 694 | 2.54 | 2.7 | 5.47 | 85 | 0.84 | 1.432 | 462 |

## 6 POLES-1.000 Rpm
380 V / 50 Hz

| Duty type | $S_3$ 6 Starts/h | | | | | | Moment of inertia Jm (kgm²) | Weight (kg) |
|---|---|---|---|---|---|---|---|---|
| FC | 60% | | | 100% | | | | |
| Frame size | KW | $I_1$ (A) | n r/min | KW | $I_1$ (A) | n r/min | | |
| KZ 112M-6 | 1.1 | 2.7 | 946 | 0.8 | 3.5 | 980 | 0.022 | 58 |
| KZ 132M1-6 | 1.8 | 5.3 | 950 | 1.5 | 4.9 | 960 | 0.056 | 80 |
| KZ 132M2-6 | 3 | 7.5 | 940 | 2.5 | 7.2 | 945 | 0.062 | 92 |
| KZ 160M1-6 | 5 | 11.5 | 940 | 4 | 10 | 953 | 0.114 | 119 |
| KZ 160M2-6 | 6.3 | 14.2 | 956 | 5.5 | 13 | 961 | 0.143 | 132 |
| KZ 160L-6 | 9 | 20.6 | 964 | 7.5 | 18.8 | 972 | 0.192 | 152 |

## 8 POLES-750 Rpm
380 V / 50 Hz

| Duty type | $S_3$ 6 Starts/h | | | | | | Moment of inertia Jm (kgm²) | Weight (kg) |
|---|---|---|---|---|---|---|---|---|
| FC | 60% | | | 100% | | | | |
| Frame size | KW | $I_1$(A) | n r/min | KW | $I_1$ (A) | n r/min | | |
| KZ 160L-8 | 6 | 15.6 | 717 | 5 | 14.2 | 724 | 0.192 | 152 |
| KZ 180L-8 | 9 | 21.5 | 710 | 7.5 | 19.2 | 718 | 0.352 | 205 |
| KZ 200L-8 | 13 | 28.1 | 714 | 11 | 26 | 720 | 0.622 | 276 |
| KZ 225M-8 | 18.5 | 40 | 718 | 17 | 37.5 | 720 | 0.82 | 347 |
| KZ 250M-8 | 26 | 56 | 702 | 22 | 45 | 717 | 1.432 | 462 |

# KZR & KZ series

Three-phase crane motors

## 6 POLES-1.000 Rpm

380 V / 50 Hz

| Duty type | $S_2$ | | | | | | | | Rotor voltage (V) | Moment of inertia Jm (kgm²) | Weight (kg) |
|---|---|---|---|---|---|---|---|---|---|---|---|
| FC | 30 minutes | | | | 60 minutes | | | | | | |
| Frame size | KW | $I_1$ (A) | $I_2$ (A) | n r/min | KW | $I_1$ (A) | $I_2$ (A) | n r/min | | | |
| KZR112M -6 | 1.8 | 5.3 | 13.4 | 815 | 1.5 | 4.63 | 12.5 | 866 | 100 | 0.03 | 74 |
| KZR132M1-6 | 2.5 | 6.5 | 12.9 | 892 | 2.2 | 6.05 | 12.6 | 908 | 132 | 0.06 | 97 |
| KZR132M2-6 | 4 | 9.7 | 14.2 | 900 | 3.7 | 9.2 | 14.5 | 908 | 185 | 0.07 | 108 |
| KZR160M1-6 | 6.3 | 16.4 | 29.4 | 921 | 5.5 | 15 | 25.7 | 930 | 138 | 0.12 | 154 |
| KZR160M2-6 | 8.5 | 19.6 | 29.8 | 930 | 7.5 | 18 | 26.5 | 940 | 185 | 0.15 | 160 |
| KZR160L-6 | 13 | 28.6 | 31.6 | 942 | 11 | 24.5 | 27.6 | 957 | 250 | 0.2 | 174 |
| KZR180L-6 | 17 | 36.7 | 49.8 | 955 | 15 | 33.8 | 46.5 | 962 | 218 | 0.39 | 230 |
| KZR200L-6 | 26 | 56.1 | 82.4 | 956 | 22 | 49.1 | 69.9 | 964 | 200 | 0.67 | 320 |
| KZR225M-6 | 34 | 70 | 85 | 957 | 30 | 62 | 74.4 | 962 | 250 | 0.84 | 398 |
| KZR250M1-6 | 42 | 80 | 103 | 960 | 37 | 70.5 | 91.5 | 965 | 250 | 1.52 | 512 |
| KZR250M2-6 | 52 | 97 | 110 | 958 | 45 | 84.5 | 95 | 965 | 290 | 1.78 | 559 |
| KZR280S-6 | 63 | 118 | 142 | 966 | 55 | 101.5 | 129.8 | 969 | 280 | 2.35 | 747 |
| KZR280M-6 | 85 | 157 | 140 | 966 | 75 | 139 | 124 | 970 | 370 | 2.86 | 848 |

## 8 POLES-750 Rpm

380 V / 50 Hz

| Duty type | $S_2$ | | | | | | | | Rotor voltage (V) | Moment of inertia Jm (kgm²) | Weight (kg) |
|---|---|---|---|---|---|---|---|---|---|---|---|
| FC | 30 minutes | | | | 60 minutes | | | | | | |
| Frame size | KW | $I_1$ (A) | $I_2$ (A) | n r/min | KW | $I_1$ (A) | $I_2$ (A) | n r/min | | | |
| KZR160L-8 | 9 | 22.4 | 28.1 | 694 | 7.5 | 19.1 | 23 | 705 | 205 | 0.2 | 172 |
| KZR180L-8 | 13 | 29.1 | 47.8 | 700 | 11 | 27 | 44 | 700 | 172 | 0.39 | 230 |
| KZR200L-8 | 18.5 | 40 | 67.2 | 701 | 15 | 33.5 | 53.5 | 712 | 178 | 0.67 | 317 |
| KZR225M-8 | 26 | 55 | 71.2 | 708 | 22 | 46.9 | 59.1 | 715 | 232 | 0.82 | 390 |
| KZR250M1-8 | 35 | 64 | 80 | 715 | 30 | 63.4 | 67.7 | 720 | 272 | 1.52 | 515 |
| KZR250M2-8 | 42 | 86 | 79 | 716 | 37 | 78 | 70 | 720 | 335 | 1.79 | 563 |
| KZR280S-8 | 52 | 108 | 106 | 712 | 45 | 96.5 | 92 | 717 | 305 | 2.35 | 747 |
| KZR280M-8 | 63 | 126 | 110 | 722 | 55 | 110.5 | 92.5 | 725 | 360 | 2.86 | 848 |
| KZR315S-8 | 85 | 164.8 | 117.8 | 722 | 75 | 146.7 | 156.7 | 725 | 302 | 7.22 | 1050 |
| KZR315M-8 | 100 | 190 | 183.5 | 715 | 90 | 172 | 160.9 | 720 | 372 | 8.68 | 1170 |

## 10 POLES-600 Rpm

380 V / 50 Hz

| Duty type | $S_2$ | | | | | | | | Rotor voltage (V) | Moment of inertia Jm (kgm²) | Weight (kg) |
|---|---|---|---|---|---|---|---|---|---|---|---|
| FC | 30 minutes | | | | 60 minutes | | | | | | |
| Frame size | KW | $I_1$ (A) | $I_2$ (A) | n r/min | KW | $I_1$ (A) | $I_2$ (A) | n r/min | | | |
| KZR280S-10 | 42 | 92 | 177.1 | 571 | 37 | 84.8 | 153.2 | 560 | 150 | 3.58 | 767 |
| KZR280M-10 | 55 | 127 | 207 | 556 | 45 | 103.8 | 165 | 560 | 172 | 3.98 | 840 |
| KZR315S-10 | 63 | 132 | 161.9 | 580 | 55 | 118.3 | 138.7 | 580 | 242 | 7.22 | 1026 |
| KZR315M-10 | 85 | 179 | 171 | 576 | 75 | 160 | 149.3 | 579 | 325 | 8.68 | 1156 |
| KZR355M-10 | 110 | 218 | 207 | 581 | 90 | 180 | 166.6 | 585 | 330 | 14.32 | 1520 |
| KZR355L1-10 | 132 | 257 | 213 | 576 | 110 | 217 | 172 | 582 | 388 | 17.08 | 1764 |
| KZR355L2-10 | 150 | 293 | 194 | 588 | 132 | 262 | 167.5 | 588 | 475 | 19.18 | 1810 |
| KZR400L1-10 | 190 | 390 | 290 | 585 | 160 | 338 | 244 | 587 | 395 | 24.52 | 2400 |
| KZR400L2-10 | 240 | 490 | 302 | 585 | 200 | 427 | 252 | 588 | 460 | 28.1 | 2950 |

# KZR & KZ series

Three-phase crane motors

## 6 POLES-1.000 Rpm
380 V / 50 Hz

| Duty type | $S_3$ 6 Starts/h | | | | | | | | Rotor voltage (V) | Moment of inertia Jm (kgm²) | Weight (kg) |
|---|---|---|---|---|---|---|---|---|---|---|---|
| FC | 15% | | | | 25% | | | | | | |
| Frame size | KW | $I_1$ (A) | $I_2$ (A) | n r/min | KW | $I_1$ (A) | $I_2$ (A) | n r/min | | | |
| KZR112M -6 | 2.2 | 6.6 | 18.4 | 725 | 1.8 | 5.3 | 13.4 | 815 | 100 | 0.03 | 74 |
| KZR132M1-6 | 3 | 8 | 16.1 | 855 | 2.5 | 6.5 | 12.9 | 892 | 132 | 0.06 | 97 |
| KZR132M2-6 | 5 | 12.3 | 18.2 | 875 | 4 | 9.7 | 14.2 | 900 | 185 | 0.07 | 108 |
| KZR160M1-6 | 7.5 | 18.5 | 35.4 | 910 | 6.3 | 16.4 | 29.4 | 921 | 138 | 0.12 | 154 |
| KZR160M2-6 | 11 | 24.6 | 39.6 | 908 | 8.5 | 19.6 | 29.8 | 930 | 185 | 0.15 | 160 |
| KZR160L-6 | 15 | 34.7 | 39 | 920 | 13 | 28.6 | 31.6 | 912 | 250 | 0.2 | 174 |
| KZR180L-6 | 20 | 42.6 | 58.7 | 946 | 17 | 36.7 | 49.8 | 955 | 218 | 0.39 | 230 |
| KZR200L-6 | 33 | 62 | 103 | 942 | 26 | 56.1 | 82.4 | 956 | 200 | 0.67 | 320 |
| KZR225M-6 | 40 | 80 | 101 | 917 | 34 | 70 | 85 | 957 | 250 | 0.84 | 398 |
| KZR250M1-6 | 50 | 99 | 123 | 950 | 42 | 80 | 103 | 960 | 250 | 1.52 | 512 |
| KZR250M2-6 | 63 | 121 | 134 | 947 | 52 | 97 | 110 | 958 | 290 | 1.78 | 559 |
| KZR280S-6 | 75 | 144 | 169.5 | 960 | 63 | 118 | 142 | 966 | 280 | 2.35 | 747 |
| KZR280M-6 | 100 | 185 | 166 | 960 | 85 | 157 | 140 | 966 | 370 | 2.86 | 848 |

## 8 POLES-750 Rpm
380 V / 50 Hz

| Duty type | $S_3$ 6 Starts/h | | | | | | | | Rotor voltage (V) | Moment of inertia Jm (kgm²) | Weight (kg) |
|---|---|---|---|---|---|---|---|---|---|---|---|
| FC | 15% | | | | 25% | | | | | | |
| Frame size | KW | $I_1$ (A) | $I_2$ (A) | n r/min | KW | $I_1$ (A) | $I_2$ (A) | n r / min | | | |
| KZR160L-8 | 11 | 27.5 | 35.3 | 676 | 9 | 22.4 | 28.1 | 694 | 205 | 0.2 | 172 |
| KZR180L-8 | 15 | 34 | 56 | 690 | 13 | 29.1 | 47.8 | 700 | 172 | 0.39 | 230 |
| KZR200L-8 | 22 | 48 | 81 | 690 | 18.5 | 40 | 67.2 | 701 | 178 | 0.67 | 317 |
| KZR225M-8 | 33 | 70 | 92 | 696 | 26 | 55 | 71.2 | 708 | 232 | 0.82 | 390 |
| KZR250M1-8 | 42 | 75 | 97.5 | 710 | 35 | 64 | 80 | 715 | 272 | 1.52 | 515 |
| KZR250M2-8 | 52 | 103 | 98 | 706 | 42 | 86 | 79 | 716 | 335 | 1.79 | 563 |
| KZR280S-8 | 63 | 129 | 130 | 704 | 52 | 108 | 106 | 712 | 305 | 2.35 | 747 |
| KZR280M-8 | 75 | 150 | 132 | 715 | 63 | 126 | 110 | 722 | 360 | 2.86 | 848 |
| KZR315S-8 | 100 | 200 | 162 | 715 | 85 | 164.8 | 177.8 | 722 | 302 | 7.22 | 1050 |
| KZR315M-8 | 125 | 250 | 232 | 717 | 100 | 190 | 183.5 | 715 | 372 | 8.68 | 1170 |

## 10 POLES-600 Rpm
380 V / 50 Hz

| Duty type | $S_3$ 6 Starts/h | | | | | | | | Rotor voltage (V) | Moment of inertia Jm (kgm²) | Weight (kg) |
|---|---|---|---|---|---|---|---|---|---|---|---|
| FC | 15% | | | | 25% | | | | | | |
| Frame size | KW | $I_1$ (A) | $I_2$ (A) | n r/min | KW | $I_1$ (A) | $I_2$ (A) | n r/min | | | |
| KZR280S-10 | 55 | 112 | 235.2 | 564 | 42 | 92 | 177.1 | 571 | 150 | 3.58 | 767 |
| KZR280M-10 | 63 | 146 | 241 | 548 | 55 | 127 | 207 | 556 | 172 | 3.98 | 840 |
| KZR315S-10 | 75 | 154 | 194 | 574 | 63 | 132.5 | 161.9 | 580 | 242 | 7.22 | 1026 |
| KZR315M-10 | 100 | 210 | 203 | 570 | 85 | 179 | 171 | 576 | 325 | 8.68 | 1156 |
| KZR355M-10 | 132 | 266 | 252 | 576 | 110 | 218 | 207 | 581 | 330 | 14.32 | 1520 |
| KZR355L1-10 | 160 | 314 | 261 | 571 | 132 | 257 | 213 | 578 | 388 | 17.08 | 1764 |
| KZR355L2-10 | 185 | 353 | 241 | 585 | 150 | 293 | 194 | 588 | 475 | 19.18 | 1810 |
| KZR400L1-10 | 220 | 445 | 336 | 581 | 190 | 390 | 290 | 584 | 395 | 24.52 | 2400 |
| KZR400L2-10 | 270 | 540 | 340 | 582 | 240 | 490 | 302 | 586 | 460 | 28.1 | 2950 |

# KZR & KZ series

Three-phase crane motors

## 6 POLES-1.000 Rpm

380 V / 50 Hz

| Duty type | $S_3$ 6 Starts/h | | | | | | | | Rotor voltage (V) | Moment of inertia Jm (kgm²) | Weight (kg) |
|---|---|---|---|---|---|---|---|---|---|---|---|
| FC | 40% | | | | | | | | | | |
| Frame size | KW | $I_1$ (A) | $I_2$ (A) | Tm | $I_0$ (A) | n r/min | n% | cosn | | | |
| KZR112M -6 | 1.5 | 4.63 | 12.5 | 2.5 | 3.37 | 866 | 65.0 | 0.77 | 100 | 0.03 | 74 |
| KZR132M1-6 | 2.2 | 6.05 | 12.6 | 2.86 | 4.04 | 908 | 70 | 0.77 | 132 | 0.06 | 97 |
| KZR132M2-6 | 3.7 | 9.2 | 14.5 | 2.51 | 5.58 | 908 | 75.5 | 0.78 | 185 | 0.07 | 108 |
| KZR160M1-6 | 5.5 | 15 | 25.7 | 2.56 | 7.95 | 930 | 75.5 | 0.78 | 138 | 0.12 | 154 |
| KZR160M2-6 | 7.5 | 18 | 26.5 | 2.78 | 11.2 | 940 | 79 | 0.8 | 185 | 0.15 | 160 |
| KZR160L-6 | 11 | 24.9 | 27.6 | 2.47 | 13 | 945 | 82 | 0.8 | 250 | 0.2 | 174 |
| KZR180L-6 | 15 | 33.8 | 46.5 | 3.2 | 18.8 | 962 | 84 | 0.81 | 218 | 0.39 | 230 |
| KZR200L-6 | 22 | 49.1 | 69.9 | 2.88 | 26.6 | 964 | 86 | 0.8 | 200 | 0.67 | 320 |
| KZR225M-6 | 30 | 62 | 74.4 | 3.3 | 29.9 | 962 | 88 | 0.82 | 250 | 0.84 | 398 |
| KZR250M1-6 | 37 | 70.5 | 91.5 | 3.13 | 26.5 | 960 | 89 | 0.89 | 250 | 1.52 | 512 |
| KZR250M2-6 | 45 | 84.5 | 95 | 3.48 | 28.2 | 965 | 90.5 | 0.89 | 290 | 1.78 | 559 |
| KZR280S-6 | 55 | 101.5 | 119.8 | 3 | 34 | 969 | 91 | 0.9 | 280 | 2.35 | 747 |
| KZR280M-6 | 75 | 139 | 124 | 3.2 | 47.5 | 970 | 91.8 | 0.89 | 370 | 2.86 | 848 |

## 8 POLES-750 Rpm

380 V / 50 Hz

| Duty type | $S_3$ 6 Starts/h | | | | | | | | Rotor voltage (V) | Moment of inertia Jm (kgm²) | Weight (kg) |
|---|---|---|---|---|---|---|---|---|---|---|---|
| FC | 40% | | | | | | | | | | |
| Frame size | KW | $I_1$ (A) | $I_2$ (A) | Tm | $I_0$ (A) | n r/min | n% | cosn | | | |
| KZR160L-8 | 7.5 | 19.1 | 23 | 2.73 | 12.7 | 705 | 78.5 | 0.72 | 205 | 0.2 | 172 |
| KZR180L-8 | 11 | 27 | 44 | 2.72 | 14.8 | 700 | 81 | 0.77 | 172 | 0.39 | 230 |
| KZR200L-8 | 15 | 33.5 | 53.5 | 2.94 | 17.75 | 712 | 85 | 0.78 | 178 | 0.67 | 317 |
| KZR225M-8 | 22 | 46.9 | 59.1 | 2.96 | 24.17 | 715 | 86 | 0.79 | 232 | 0.82 | 390 |
| KZR250M1-8 | 30 | 63.4 | 68.8 | 2.64 | 31.4 | 720 | 87 | 0.8 | 272 | 1.52 | 515 |
| KZR250M2-8 | 37 | 78.1 | 70 | 2.73 | 36.9 | 720 | 88 | 0.82 | 335 | 1.79 | 563 |
| KZR280S-8 | 45 | 96.5 | 92 | 3.17 | 48 | 717 | 88.8 | 0.8 | 305 | 2.35 | 747 |
| KZR280M-8 | 55 | 110.5 | 92.5 | 2.85 | 52.3 | 725 | 89 | 0.84 | 360 | 2.86 | 848 |
| KZR315S-8 | 75 | 146.7 | 156.7 | 2.94 | 62 | 725 | 89 | 0.85 | 302 | 7.22 | 1050 |
| KZR315M-8 | 90 | 172 | 160.9 | 3.13 | 57.7 | 720 | 90 | 0.87 | 372 | 8.68 | 1170 |

## 10 POLES-600 Rpm

380 V / 50 Hz

| Duty type | $S_3$ 6 Starts/h | | | | | | | | Rotor voltage (V) | Moment of inertia Jm (kgm²) | Weight (kg) |
|---|---|---|---|---|---|---|---|---|---|---|---|
| FC | 40% | | | | | | | | | | |
| Frame size | KW | $I_1$ (A) | $I_2$ (A) | Tm | $I_0$ (A) | n r/min | n% | cosn | | | |
| KZR280S-10 | 37 | 84.8 | 153.2 | 2.8 | 44.2 | 572 | 86 | 0.76 | 150 | 3.58 | 767 |
| KZR280M-10 | 45 | 103.8 | 165 | 3.16 | 63.6 | 560 | 86 | 0.77 | 172 | 3.98 | 840 |
| KZR315S-10 | 55 | 118.3 | 138.7 | 3.11 | 62.5 | 580 | 88.5 | 0.79 | 242 | 7.22 | 1026 |
| KZR315M-10 | 75 | 160 | 149.3 | 3.45 | 85.3 | 579 | 89 | 0.79 | 325 | 8.68 | 1156 |
| KZR355M-10 | 90 | 180 | 166.6 | 3.33 | 83 | 589 | 90 | 0.81 | 330 | 14.32 | 1520 |
| KZR355L1-10 | 110 | 217 | 172 | 3.1 | 90 | 582 | 91 | 0.82 | 388 | 17.08 | 1764 |
| KZR355L2-10 | 132 | 262 | 167.5 | 3.48 | 126 | 588 | 92 | 0.82 | 475 | 19.18 | 1810 |
| KZR400L1-10 | 160 | 338 | 244 | 3.02 | 175 | 587 | 91.5 | 0.79 | 395 | 24.52 | 2400 |
| KZR400L2-10 | 200 | 423 | 252 | 2.85 | 213 | 588 | 92.2 | 0.77 | 460 | 28.1 | 2950 |

# KZR & KZ series

Three-phase crane motors

## 6 POLES-1.000 Rpm
380 V / 50 Hz

| Duty type | $S_3$ 6 Starts/h | | | | | | | | Rotor voltage (V) | Moment of inertia Jm (kgm²) | Weight (kg) |
|---|---|---|---|---|---|---|---|---|---|---|---|
| FC | 60% | | | | 100% | | | | | | |
| Frame size | KW | $I_1$ (A) | $I_2$ (A) | n r/min | KW | $I_1$ (A) | $I_2$ (A) | n r/min | | | |
| KZR112M -6 | 1.1 | 3.8 | 7.32 | 912 | 0.8 | 3.5 | 5.16 | 940 | 100 | 0.03 | 74 |
| KZR132M1-6 | 1.8 | 5.4 | 8.96 | 921 | 1.5 | 5 | 7.3 | 940 | 132 | 0.06 | 97 |
| KZR132M2-6 | 3 | 7.9 | 10.2 | 937 | 2.5 | 7.5 | 8.4 | 950 | 185 | 0.07 | 108 |
| KZR160M1-6 | 5 | 14 | 22.9 | 935 | 4 | 12.5 | 18.2 | 944 | 138 | 0.12 | 154 |
| KZR160M2-6 | 6.3 | 16 | 21.7 | 949 | 5.5 | 15 | 18.8 | 956 | 185 | 0.15 | 160 |
| KZR160L-6 | 9 | 21 | 22.3 | 952 | 7.5 | 18.8 | 18.5 | 970 | 250 | 0.2 | 174 |
| KZR180L-6 | 13 | 29.7 | 37.3 | 968 | 11 | 25.5 | 31.4 | 975 | 218 | 0.39 | 230 |
| KZR200L-6 | 19 | 44.5 | 60.5 | 969 | 17 | 40.5 | 52.6 | 973 | 200 | 0.67 | 320 |
| KZR225M-6 | 26 | 55 | 64.5 | 968 | 22 | 50 | 54.2 | 975 | 250 | 0.84 | 398 |
| KZR250M1-6 | 32 | 61 | 79 | 970 | 28 | 55 | 69 | 975 | 250 | 1.52 | 512 |
| KZR250M2-6 | 39 | 73 | 83 | 969 | 33 | 64 | 71 | 974 | 290 | 1.78 | 559 |
| KZR280S-6 | 48 | 88 | 107.1 | 972 | 40 | 76 | 88.9 | 976 | 280 | 2.35 | 747 |
| KZR280M-6 | 63 | 118 | 104 | 975 | 50 | 96.3 | 82 | 980 | 370 | 2.86 | 848 |

## 8 POLES-750 Rpm
380 V / 50 Hz

| Duty type | $S_3$ 6 Starts/h | | | | | | | | Rotor voltage (V) | Moment of inertia Jm (kgm²) | Weight (kg) |
|---|---|---|---|---|---|---|---|---|---|---|---|
| FC | 60% | | | | 100% | | | | | | |
| Frame size | KW | $I_1$ (A) | $I_2$ (A) | n r/min | KW | $I_1$ (A) | $I_2$ (A) | n r/min | | | |
| KZR160L-8 | 6 | 16.4 | 18.2 | 712 | 5 | 14 | 15 | 724 | 205 | 0.2 | 172 |
| KZR180L-8 | 9 | 21.9 | 32.1 | 720 | 7.5 | 19.6 | 26.6 | 726 | 172 | 0.39 | 230 |
| KZR200L-8 | 13 | 30 | 46 | 718 | 11 | 27 | 38.7 | 723 | 178 | 0.67 | 317 |
| KZR225M-8 | 18.5 | 41 | 49.5 | 721 | 17 | 38 | 45 | 723 | 232 | 0.82 | 390 |
| KZR250M1-8 | 26 | 52 | 59.1 | 725 | 22 | 46 | 49.7 | 729 | 272 | 1.52 | 515 |
| KZR250M2-8 | 32 | 68 | 60 | 725 | 27 | 60 | 51 | 729 | 335 | 1.79 | 563 |
| KZR280S-8 | 39 | 86.2 | 79.4 | 722 | 33 | 76.3 | 67 | 726 | 305 | 2.35 | 747 |
| KZR280M-8 | 48 | 103 | 82.8 | 730 | 40 | 93 | 68.7 | 732 | 360 | 2.86 | 848 |
| KZR315S-8 | 63 | 126.4 | 130.7 | 729 | 55 | 105.4 | 104.3 | 731 | 302 | 7.22 | 1050 |
| KZR315M-8 | 75 | 140 | 136 | 725 | 63 | 124 | 113.8 | 728 | 372 | 8.68 | 1170 |

## 10 POLES-600 Rpm
380 V / 50 Hz

| Duty type | $S_3$ 6 Starts/h | | | | | | | | Rotor voltage (V) | Moment of inertia Jm (kgm²) | Weight (kg) |
|---|---|---|---|---|---|---|---|---|---|---|---|
| FC | 60% | | | | 100% | | | | | | |
| Frame size | KW | $I_1$ (A) | $I_2$ (A) | n r/min | KW | $I_1$ (A) | $I_2$ (A) | n r/min | | | |
| KZR280S-10 | 32 | 77 | 133.4 | 578 | 27 | 69 | 111.8 | 582 | 150 | 3.58 | 767 |
| KZR280M-10 | 37 | 90 | 136 | 569 | 33 | 89.5 | 118 | 587 | 172 | 3.98 | 840 |
| KZR315S-10 | 48 | 106.6 | 122 | 585 | 40 | 95.2 | 101 | 588 | 242 | 7.22 | 1026 |
| KZR315M-10 | 63 | 140 | 124.8 | 584 | 50 | 125 | 98.5 | 587 | 325 | 8.68 | 1156 |
| KZR355M-10 | 75 | 154 | 140 | 588 | 63 | 136 | 117 | 589 | 330 | 14.32 | 1520 |
| KZR355L1-10 | 90 | 181 | 143 | 585 | 75 | 157 | 119 | 588 | 388 | 17.08 | 1764 |
| KZR355L2-10 | 110 | 226 | 141.8 | 591 | 90 | 191 | 115.6 | 592 | 475 | 19.18 | 1810 |
| KZR400L1-10 | 135 | 294 | 206 | 592 | 115 | 268 | 174 | 591 | 395 | 24.52 | 2400 |
| KZR400L2-10 | 170 | 372 | 214 | 591 | 145 | 332 | 183 | 592 | 460 | 28.1 | 2950 |

# KZR & KZ series

Three-phase crane motors

## 6 POLES-1.000 Rpm
380 V / 50 Hz

| Duty type | $S_4$ - $S_5$ 150 Starts/h | | | | | | | | Rotor voltage (V) | Moment of inertia Jm (kgm²) | Weight (kg) |
|---|---|---|---|---|---|---|---|---|---|---|---|
| FC | 25% | | | | 40% | | | | | | |
| Frame size | KW | $I_1$ (A) | $I_2$ (A) | n r/min | KW | $I_1$ (A) | $I_2$ (A) | n r/min | | | |
| KZR112M -6 | 1.6 | 4.75 | 11.3 | 845 | 1.3 | 4.2 | 8.85 | 890 | 100 | 0.03 | 74 |
| KZR132M1-6 | 2.2 | 6 | 11.2 | 908 | 2 | 5.7 | 10 | 913 | 132 | 0.06 | 97 |
| KZR132M2-6 | 3.7 | 9.7 | 13.1 | 915 | 3.5 | 9.2 | 11.2 | 925 | 185 | 0.07 | 108 |
| KZR160M1-6 | 5.8 | 15.5 | 27.3 | 927 | 5 | 14.1 | 23.4 | 935 | 138 | 0.12 | 154 |
| KZR160M2-6 | 7.5 | 18 | 27.6 | 940 | 7 | 17.1 | 25.6 | 945 | 185 | 0.15 | 160 |
| KZR160L-6 | 11 | 28.3 | 27.8 | 950 | 10 | 23 | 25 | 957 | 250 | 0.2 | 174 |
| KZR180L-6 | 15 | 33 | 43.7 | 960 | 13 | 29.5 | 37.7 | 965 | 218 | 0.39 | 230 |
| KZR200L-6 | 21 | 47 | 55.4 | 965 | 18.5 | 42.5 | 48.5 | 970 | 200 | 0.67 | 320 |
| KZR225M-6 | 28 | 58 | 70 | 965 | 25 | 53 | 62.2 | 969 | 250 | 0.84 | 398 |
| KZR250M1-6 | 33 | 63 | 82.6 | 970 | 30 | 58 | 74.9 | 973 | 250 | 1.52 | 512 |
| KZR250M2-6 | 42 | 78 | 90.5 | 967 | 37 | 70 | 79.3 | 971 | 290 | 1.78 | 559 |
| KZR280S-6 | 52 | 95 | 116 | 970 | 45 | 83 | 100 | 974 | 280 | 2.35 | 747 |
| KZR280M-6 | 70 | 130 | 115 | 972 | 62 | 114 | 102 | 975 | 370 | 2.86 | 848 |

## 8 POLES-750 Rpm
380 V / 50 Hz

| Duty type | $S_4$ - $S_5$ 150 Starts/h | | | | | | | | Rotor voltage (V) | Moment of inertia Jm (kgm²) | Weight (kg) |
|---|---|---|---|---|---|---|---|---|---|---|---|
| FC | 25% | | | | 40% | | | | | | |
| Frame size | KW | $I_1$ (A) | $I_2$ (A) | n r/min | KW | $I_1$ (A) | $I_2$ (A) | n r/min | | | |
| KZR160L-8 | 7.5 | 19 | 22.8 | 712 | 7 | 18.1 | 21.2 | 716 | 205 | 0.2 | 172 |
| KZR180L-8 | 11 | 25.4 | 40.6 | 711 | 10 | 23.5 | 36.6 | 717 | 172 | 0.39 | 230 |
| KZR200L-8 | 15 | 34 | 54.1 | 713 | 13 | 30 | 46.6 | 718 | 178 | 0.67 | 317 |
| KZR225M-8 | 21 | 45 | 56.8 | 718 | 18.5 | 41 | 49.7 | 721 | 232 | 0.82 | 390 |
| KZR250M1-8 | 29 | 61.5 | 68.5 | 700 | 25 | 54 | 58.7 | 705 | 272 | 1.52 | 515 |
| KZR250M2-8 | 33 | 70 | 62.5 | 725 | 30 | 64 | 56.6 | 727 | 335 | 1.79 | 563 |
| KZR280S-8 | 42 | 91 | 85.8 | 719 | 37 | 83 | 75.6 | 723 | 305 | 2.35 | 747 |
| KZR280M-8 | 52 | 104 | 90.2 | 727 | 45 | 93 | 77.7 | 730 | 360 | 2.86 | 848 |
| KZR315S-8 | 64 | 118 | 132.7 | 731 | 60 | 110.5 | 124.2 | 733 | 302 | 7.22 | 1050 |
| KZR315M-8 | 75 | 142 | 136 | 725 | 72 | 136 | 130.7 | 725 | 372 | 8.68 | 1170 |

## 10 POLES-600 Rpm
380 V / 50 Hz

| Duty type | $S_4$ - $S_5$ 150 Starts/h | | | | | | | | Rotor voltage (V) | Moment of inertia Jm (kgm²) | Weight (kg) |
|---|---|---|---|---|---|---|---|---|---|---|---|
| FC | 25% | | | | 40% | | | | | | |
| Frame size | KW | $I_1$ (A) | $I_2$ (A) | n r/min | KW | $I_1$ (A) | $I_2$ (A) | n r/min | | | |
| KZR280S-10 | 33 | 78.7 | 141.8 | 578 | 30 | 74 | 125 | 579 | 150 | 3.58 | 767 |
| KZR280M-10 | 42 | 98.7 | 154 | 565 | 37 | 90 | 136 | 569 | 172 | 3.98 | 840 |
| KZR315S-10 | 50 | 110 | 128.4 | 583 | 45 | 100 | 115.3 | 585 | 242 | 7.22 | 1026 |
| KZR315M-10 | 65 | 144 | 129 | 584 | 63 | 136 | 119 | 585 | 325 | 8.68 | 1156 |
| KZR355M-10 | 80 | 160.5 | 149.7 | 587 | 72 | 156 | 134.5 | 588 | 330 | 14.32 | 1520 |
| KZR355L1-10 | 100 | 185 | 157 | 586 | 90 | 170 | 142 | 588 | 388 | 17.08 | 1764 |
| KZR355L2-10 | 120 | 250 | 149.8 | 588 | 110 | 230 | 137.5 | 589 | 475 | 19.18 | 1810 |
| KZR400L1-10 | 146 | 314 | 223 | 588 | 130 | 288 | 199 | 589 | 410 | 24.52 | 2400 |
| KZR400L2-10 | 185 | 396 | 223 | 590 | 165 | 365 | 262 | 589 | 480 | 28.1 | 2950 |

# KZR & KZ series

Three-phase crane motors

## 6 POLES-1.000 Rpm
380 V / 50 Hz

| Duty type | $S_4$ - $S_5$ 150 Starts/h | | | | Rotor voltage (V) | Moment of inertia Jm (kgm²) | Weight (kg) |
|---|---|---|---|---|---|---|---|
| FC | 60% | | | | | | |
| Frame size | KW | $I_1$ (A) | $I_2$ (A) | n r/min | | | |
| KZR112M -6 | 1 | 3.75 | 6.57 | 920 | 100 | 0.03 | 74 |
| KZR132M1-6 | 1.7 | 5.3 | 8.4 | 931 | 132 | 0.06 | 97 |
| KZR132M2-6 | 2.8 | 8.5 | 9.65 | 940 | 185 | 0.07 | 108 |
| KZR160M1-6 | 4.8 | 13.8 | 22.7 | 937 | 138 | 0.12 | 154 |
| KZR160M2-6 | 6 | 15.6 | 21.8 | 954 | 185 | 0.15 | 160 |
| KZR160L-6 | 8 | 19.5 | 19.8 | 969 | 250 | 0.2 | 174 |
| KZR180L-6 | 12 | 28 | 34.6 | 969 | 218 | 0.39 | 230 |
| KZR200L-6 | 17 | 40.5 | 53.8 | 973 | 200 | 0.67 | 320 |
| KZR225M-6 | 22 | 50 | 54.5 | 973 | 250 | 0.84 | 398 |
| KZR250M1-6 | 28 | 54 | 69.8 | 975 | 250 | 1.52 | 512 |
| KZR250M2-6 | 33 | 63 | 70.5 | 975 | 290 | 1.78 | 559 |
| KZR280S-6 | 42 | 80 | 93.6 | 975 | 280 | 2.35 | 747 |
| KZR280M-6 | 55 | 90.5 | 104 | 978 | 370 | 2.86 | 848 |

## 8 POLES-750 Rpm
380 V / 50 Hz

| Duty type | $S_4$ - $S_5$ 150 Starts/h | | | | Rotor voltage (V) | Moment of inertia Jm (kgm²) | Weight (kg) |
|---|---|---|---|---|---|---|---|
| FC | 60% | | | | | | |
| Frame size | KW | $I_1$ (A) | $I_2$ (A) | n r/min | | | |
| KZR160L-8 | 5.8 | 16.4 | 17.3 | 724 | 205 | 0.2 | 172 |
| KZR180L-8 | 8 | 20.5 | 28.8 | 728 | 172 | 0.39 | 230 |
| KZR200L-8 | 12 | 28.2 | 43 | 720 | 178 | 0.67 | 317 |
| KZR225M-8 | 17 | 38 | 45.6 | 724 | 232 | 0.82 | 390 |
| KZR250M1-8 | 22 | 49 | 51.9 | 712 | 272 | 1.52 | 515 |
| KZR250M2-8 | 28 | 61 | 52.8 | 728 | 335 | 1.79 | 563 |
| KZR280S-8 | 33 | 76.3 | 67 | 726 | 305 | 2.35 | 747 |
| KZR280M-8 | 42 | 89 | 72.4 | 732 | 360 | 2.86 | 848 |
| KZR315S-8 | 56 | 106 | 115.8 | 733 | 302 | 7.22 | 1050 |
| KZR315M-8 | 65 | 126 | 117.6 | 727 | 372 | 8.68 | 1170 |

## 10 POLES-600 Rpm
380 V / 50 Hz

| Duty type | $S_4$ - $S_5$ 150 Starts/h | | | | Rotor voltage (V) | Moment of inertia Jm (kgm²) | Weight (kg) |
|---|---|---|---|---|---|---|---|
| FC | 60% | | | | | | |
| Frame size | KW | $I_1$ (A) | $I_2$ (A) | n r/min | | | |
| KZR280S-10 | 28 | 71 | 116 | 580 | 150 | 3.58 | 767 |
| KZR280M-10 | 33 | 84.3 | 118 | 573 | 172 | 3.98 | 840 |
| KZR315S-10 | 42 | 96 | 107.4 | 586 | 242 | 7.22 | 1026 |
| KZR315M-10 | 55 | 130 | 109 | 586 | 325 | 8.68 | 1156 |
| KZR355M-10 | 65 | 140 | 121 | 589 | 330 | 14.32 | 1520 |
| KZR355L1-10 | 80 | 155 | 126.5 | 589 | 388 | 17.08 | 1764 |
| KZR355L2-10 | 95 | 210 | 122.7 | 591 | 475 | 19.18 | 1810 |
| KZR400L1-10 | 115 | 268 | 175 | 590 | 410 | 24.52 | 2400 |
| KZR400L2-10 | 145 | 332 | 183 | 592 | 480 | 28.1 | 2950 |

# KZR & KZ series

Three-phase crane motors

## 6 POLES-1.000 Rpm

380 V / 50 Hz

| Duty type | $S_4$ - $S_5$ 300 Starts/h | | | | | | | | Rotor voltage (V) | Moment of inertia Jm (kgm²) | Weight (kg) |
|---|---|---|---|---|---|---|---|---|---|---|---|
| FC | 40% | | | | 60% | | | | | | |
| Frame size | KW | $I_1$ (A) | $I_2$ (A) | n r/min | KW | $I_1$ (A) | $I_2$ (A) | n r/min | | | |
| KZR112M -6 | 1.2 | 4 | 8 | 900 | 0.9 | 3.7 | 5.87 | 930 | 100 | 0.03 | 74 |
| KZR132M1-6 | 1.8 | 5.4 | 8.95 | 926 | 1.6 | 5.1 | 7.87 | 936 | 132 | 0.06 | 97 |
| KZR132M2-6 | 3.3 | 9.4 | 11.9 | 925 | 2.7 | 8.5 | 9.65 | 940 | 185 | 0.07 | 108 |
| KZR160M1-6 | 4.8 | 14.1 | 23.4 | 935 | 4.5 | 13.8 | 22.4 | 937 | 138 | 0.12 | 154 |
| KZR160M2-6 | 6 | 15.6 | 21.8 | 954 | 5.5 | 14.8 | 19.8 | 959 | 185 | 0.15 | 160 |
| KZR160L-6 | 9 | 19.5 | 19.8 | 969 | 7.5 | 18.7 | 18.5 | 971 | 250 | 0.2 | 174 |
| KZR180L-6 | 12 | 28 | 34.6 | 969 | 11 | 26.6 | 31.7 | 972 | 218 | 0.39 | 230 |
| KZR200L-6 | 17 | 40.5 | 52.6 | 973 | 15 | 37 | 40 | 975 | 200 | 0.67 | 320 |
| KZR225M-6 | 22 | 50 | 54.5 | 973 | 20 | 46 | 49.4 | 977 | 250 | 0.84 | 398 |
| KZR250M1-6 | 26 | 52 | 64.6 | 977 | 25 | 50 | 62.1 | 978 | 250 | 1.52 | 512 |
| KZR250M2-6 | 31 | 60 | 66.1 | 976 | 30 | 58 | 63.9 | 977 | 290 | 1.78 | 559 |
| KZR280S-6 | 40 | 76 | 89 | 977 | 37 | 71 | 82.2 | 978 | 280 | 2.35 | 747 |
| KZR280M-6 | 52 | 98 | 85.5 | 979 | 47 | 92 | 77.3 | 981 | 370 | 2.86 | 848 |

## 8 POLES-750 Rpm

380 V / 50 Hz

| Duty type | $S_4$ - $S_5$ 300 Starts/h | | | | | | | | Rotor voltage (V) | Moment of inertia Jm (kgm²) | Weight (kg) |
|---|---|---|---|---|---|---|---|---|---|---|---|
| FC | 40% | | | | 60% | | | | | | |
| Frame size | KW | $I_1$ (A) | $I_2$ (A) | n r/min | KW | $I_1$ (A) | $I_2$ (A) | n r/min | | | |
| KZR160L-8 | 6 | 16.7 | 18 | 722 | 5 | 15.5 | 14.9 | 727 | 205 | 0.2 | 172 |
| KZR180L-8 | 8 | 20.5 | 28.8 | 728 | 7.5 | 19.7 | 26.9 | 729 | 172 | 0.39 | 230 |
| KZR200L-8 | 12 | 28.2 | 43 | 720 | 11 | 27 | 39.1 | 724 | 178 | 0.67 | 317 |
| KZR225M-8 | 17 | 38 | 45.6 | 724 | 15 | 35.1 | 40 | 727 | 232 | 0.82 | 390 |
| KZR250M1-8 | 22 | 49 | 51.9 | 712 | 20 | 46 | 46.2 | 716 | 272 | 1.52 | 515 |
| KZR250M2-8 | 26 | 58 | 48.9 | 730 | 25 | 57 | 47 | 731 | 335 | 1.79 | 563 |
| KZR280S-8 | 31 | 74 | 63.5 | 728 | 30 | 72 | 61.5 | 732 | 305 | 2.35 | 747 |
| KZR280M-8 | 42 | 89 | 72.4 | 732 | 37 | 83 | 63.5 | 735 | 360 | 2.86 | 848 |
| KZR315S-8 | 52 | 100 | 107 | 735 | 48 | 94 | 98.8 | 736 | 302 | 7.22 | 1050 |
| KZR315M-8 | 60 | 120 | 108 | 729 | 55 | 116 | 99 | 729 | 372 | 8.68 | 1170 |

## 10 POLES-600 Rpm

380 V / 50 Hz

| Duty type | $S_4$ - $S_5$ 300 Starts/h | | | | | | | | Rotor voltage (V) | Moment of inertia Jm (kgm²) | Weight (kg) |
|---|---|---|---|---|---|---|---|---|---|---|---|
| FC | 40% | | | | 60% | | | | | | |
| Frame size | KW | $I_1$ (A) | $I_2$ (A) | n r/min | KW | $I_1$ (A) | $I_2$ (A) | n r/min | | | |
| KZR280S-10 | 26 | 68 | 108 | 582 | 25 | 66 | 103 | 583 | 150 | 3.58 | 767 |
| KZR280M-10 | 31 | 82 | 110 | 574 | 28 | 78.5 | 98 | 577 | 172 | 3.98 | 840 |
| KZR315S-10 | 40 | 94 | 102.2 | 587 | 37 | 90 | 94.5 | 587 | 242 | 7.22 | 1026 |
| KZR315M-10 | 53 | 126 | 98.7 | 587 | 48 | 124 | 94.7 | 588 | 325 | 8.68 | 1156 |
| KZR355M-10 | 60 | 130 | 112 | 590 | 55 | 124 | 102.4 | 590 | 330 | 14.32 | 1520 |
| KZR355L1-10 | 75 | 150 | 119 | 590 | 70 | 145 | 111 | 591 | 388 | 17.08 | 1764 |
| KZR355L2-10 | 90 | 205 | 116.2 | 591 | 80 | 190 | 130.2 | 592 | 475 | 19.18 | 1810 |
| KZR400L1-10 | 110 | 260 | 168 | 591 | 97 | 247 | 148 | 592 | 410 | 24.52 | 2400 |
| KZR400L2-10 | 140 | 324 | 176 | 592 | 123 | 298 | 155 | 592 | 480 | 28.1 | 2950 |

# KZR & KZ series

Three-phase crane motors

## 6 POLES-1.000 Rpm, 380 V / 50 Hz

| Duty type | $S_4$ - $S_5$ 600 Starts/h | | | | Rotor voltage (V) | Moment of inertia Jm (kgm²) | Weight (kg) |
|---|---|---|---|---|---|---|---|
| FC | 60% | | | | | | |
| Frame size | KW | $I_1$ (A) | $I_2$ (A) | n r/min | | | |
| KZR112M -6 | 0.7 | 3.4 | 4.46 | 946 | 100 | 0.03 | 74 |
| KZR132M1-6 | 1.35 | 4.9 | 6.8 | 945 | 132 | 0.06 | 97 |
| KZR132M2-6 | 2.3 | 6 | 7.5 | 950 | 185 | 0.07 | 108 |
| KZR160M1-6 | 3.8 | 12.2 | 17.5 | 946 | 138 | 0.12 | 154 |
| KZR160M2-6 | 4 | 13 | 14.2 | 970 | 185 | 0.15 | 160 |
| KZR160L-6 | 6 | 16.7 | 14.2 | 978 | 250 | 0.2 | 174 |
| KZR180L-6 | 9 | 23.6 | 22.9 | 978 | 218 | 0.39 | 230 |
| KZR200L-6 | 11 | 31.5 | 28.5 | 981 | 200 | 0.67 | 320 |
| KZR225M-6 | 15 | 39 | 36.8 | 982 | 250 | 0.84 | 398 |
| KZR250M1-6 | 17.5 | 39 | 43.2 | 984 | 250 | 1.52 | 512 |
| KZR250M2-6 | 24 | 49 | 50.9 | 981 | 290 | 1.78 | 559 |
| KZR280S-6 | 30 | 64 | 66.5 | 980 | 280 | 2.35 | 747 |
| KZR280M-6 | 37 | 78 | 61 | 982 | 370 | 2.86 | 848 |

## 8 POLES-750 Rpm, 380 V / 50 Hz

| Duty type | $S_4$ - $S_5$ 600 Starts/h | | | | Rotor voltage (V) | Moment of inertia Jm (kgm²) | Weight (kg) |
|---|---|---|---|---|---|---|---|
| FC | 60% | | | | | | |
| Frame size | KW | $I_1$ (A) | $I_2$ (A) | n r/min | | | |
| KZR160L-8 | 3.8 | 13.7 | 11.2 | 732 | 205 | 0.2 | 172 |
| KZR180L-8 | 5.8 | 17.8 | 20.6 | 736 | 172 | 0.39 | 230 |
| KZR200L-8 | 9 | 23 | 28.1 | 731 | 178 | 0.67 | 317 |
| KZR225M-8 | 11 | 31 | 29.1 | 733 | 232 | 0.82 | 390 |
| KZR250M1-8 | 15 | 39 | 34.2 | 725 | 272 | 1.52 | 515 |
| KZR250M2-8 | 18.5 | 45 | 34.4 | 736 | 335 | 1.79 | 563 |
| KZR280S-8 | 24 | 64 | 49.1 | 733 | 305 | 2.35 | 747 |
| KZR280M-8 | 30 | 73 | 51.4 | 737 | 360 | 2.86 | 848 |
| KZR315S-8 | 35 | 80 | 71.7 | 740 | 302 | 7.22 | 1050 |
| KZR315M-8 | 41 | 100 | 73.7 | 732 | 372 | 8.68 | 1170 |

## 10 POLES-600 Rpm, 380 V / 50 H

| Duty type | $S_4$ - $S_5$ 600 Starts/h | | | | Rotor voltage (V) | Moment of inertia Jm (kgm²) | Weight (kg) |
|---|---|---|---|---|---|---|---|
| FC | 60% | | | | | | |
| Frame size | KW | $I_1$ (A) | $I_2$ (A) | n r/min | | | |
| KZR280S-10 | 17 | 56 | 69.8 | 588 | 150 | 3.58 | 767 |
| KZR280M-10 | 22 | 72.5 | 75 | 582 | 172 | 3.98 | 840 |
| KZR315S-10 | 30 | 84 | 76.3 | 589 | 242 | 7.22 | 1026 |
| KZR315M-10 | 37 | 114 | 73 | 589 | 325 | 8.68 | 1156 |
| KZR355M-10 | 41 | 104 | 76.19 | 591 | 330 | 14.32 | 1520 |
| KZR355L1-10 | 50 | 120 | 78.4 | 594 | 388 | 17.08 | 1764 |
| KZR355L2-10 | 60 | 165 | 77.1 | 594 | 475 | 19.18 | 1810 |
| KZR400L1-10 | 75 | 220 | 114 | 594 | 410 | 24.52 | 2400 |
| KZR400L2-10 | 95 | 265 | 122 | 594 | 480 | 28.1 | 2950 |

**Note:** The data in the table is based on the moment of inertia of the load being equal to the moment of inertia of the motor.
The selection of motors for S1 or S5 operation must be test checked according to the moment of inertia of the real load.

# KZR & KZ series

Three-phase crane motors

## Construction of motor

## Mode of cooling:

a. Frame 112-132 cooling use external natural (IC0041)
b. Frame 160-400 cooling use the form of fan cooling (IC0141)
c. Frame 400 cooling can use fan for internal circulation either (IC0151)

## Mounting arrangements

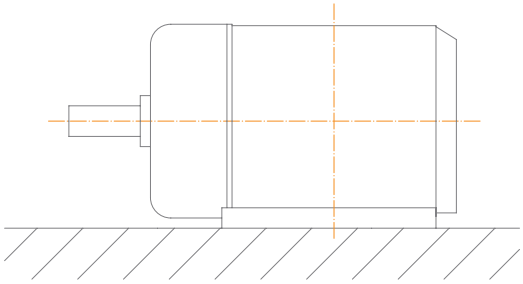

| Symbol | Range (Frame size) |
|---|---|
| IM1001 | 112 – 160 |
| IM1003 | 180 – 400 |

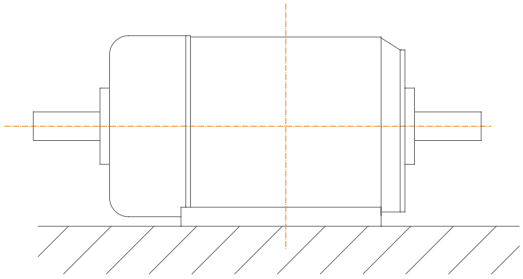

| Symbol | Range (Frame size) |
|---|---|
| IM1002 | 112 – 160 |
| IM1004 | 180 – 400 |

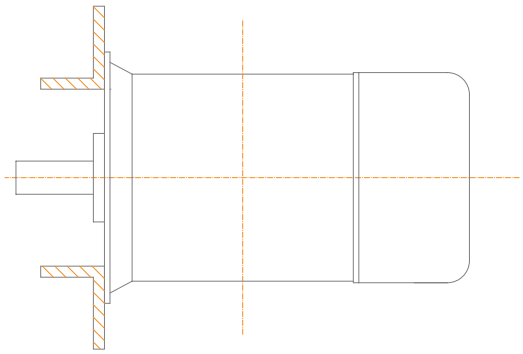

| Symbol | Range (Frame size) |
|---|---|
| IM3001 | 112 – 160 |
| IM3003 | 180 |

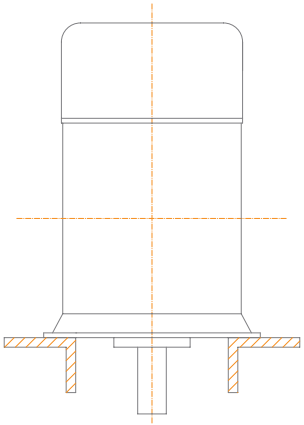

| Symbol | Range (Frame size) |
|---|---|
| IM3011 | 112 – 160 |
| IM3013 | 180 - 315 |

The shaft extension can be made according to customer ‘s request.
Transmission through shaft coupling or spur wheel may be used. If the latter is taken, the minimum pitch circle diameter of the shaft extension end.
Terminal box on the top of the frame has two directions along both sides of the motor for stator, but the rotor’s outlet position may be from both sides of the end shield.
The measures are taken to prevent slack on the fastener of the motor.

## CARBON BRUSH

| Frame size | The dimensions of brush (mm) | The outer diameter of slip-ring (mm) |
|---|---|---|
| KZR112 | 20x8x32 | 100 |
| KZR132 | 20x8x32 | 100 |
| KZR160 | 25x10x40 | 112 |
| KZR180 | 25x10x40 | 125 |
| KZR200 | 32x12.5x50 | 140 |
| KZR225 | 32x12.5x50 | 140 |
| KZR250 | 40x12.5x50 | 160 |
| KZR280 | 40x20x60 | 200 |
| KZR315 | 40x20x60 | 200 |
| KZR355 | 50x20x60 | 250 |
| KZR400 | 2(40x20x60) | 250 |

The carbon brush type is J201

## BEARINGS

| Frame size | IM1 | | IM2 | |
|---|---|---|---|---|
| | Load end | Non-load end | Load end | Non-load end |
| 112 | 6308 | 6308 | 6308 | 6308 |
| 132 | 6309 | 6309 | 6309 | 6309 |
| 160 | 6311 | 6311 | 6311 | 6311 |
| 180 | 6313 | 6313 | 6313 | 6313 |
| 200 | NU 315 | 6315 | NU 315 | 7315 |
| 225 | NU 315 | 6315 | NU 315 | 7315 |
| 250 | NU 316 | 6316 | NU 316 | 7316 |
| 280 | NU 320 | 6320 | NU 320 | 7320 |
| 315 | NU 322 | 6322 | NU 322 | 7322 |
| 355 | NU 326 | 6326 | | |
| 400 | NU 330 | 6330 | | |

# KZR & KZ series

## Arrangement & Parts list

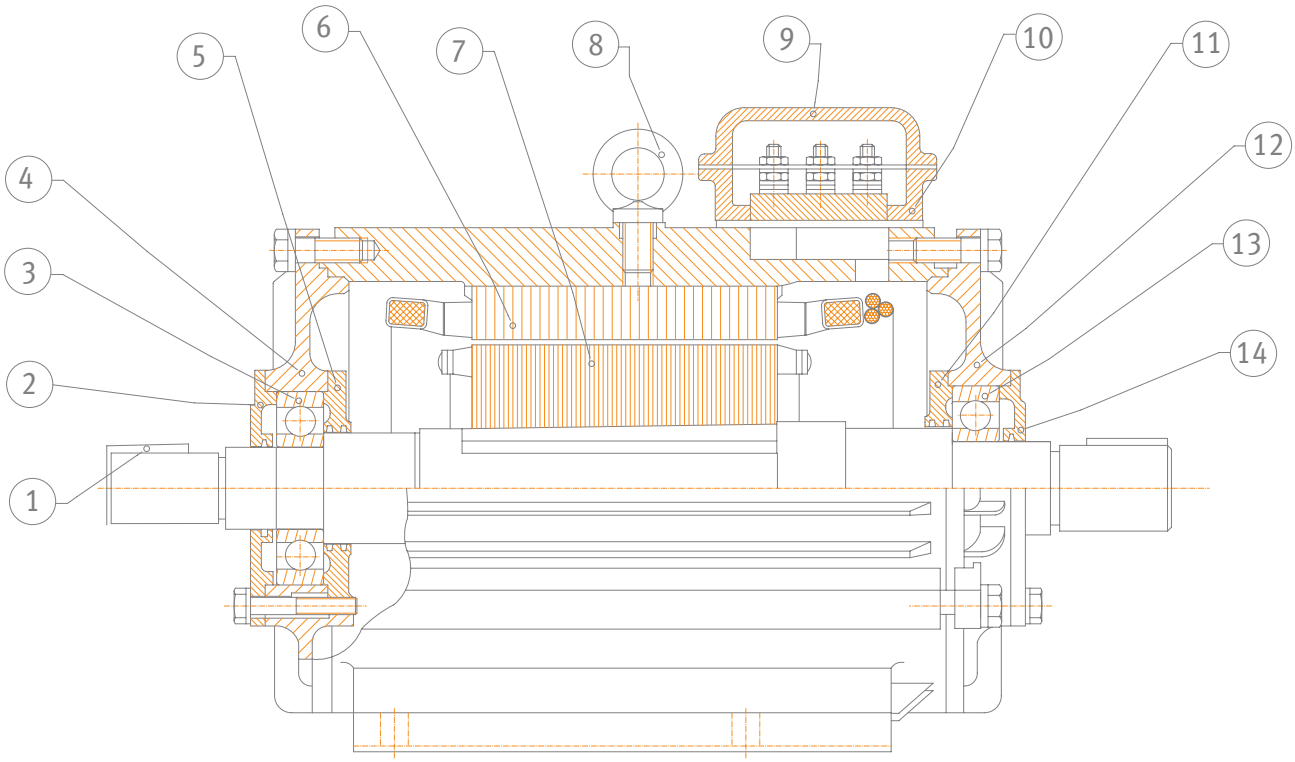


KZ 112 ~ 132

| | | | |
|---|---|---|---|
| 1 | Shaft and key | 8 | Eyebolt |
| 2 | Outer bearing cap D.E. | 9 | Terminal box lid |
| 3 | Bearing D.E. | 10 | Terminal box base |
| 4 | Endshield D.E. | 11 | Inner bearing cap N.D.E. |
| 5 | Inner bearing cap D.E. | 12 | Endshield N.D.E. |
| 6 | Stator lamination pack | 13 | Bearing N.D.E. |
| 7 | Rotor lamination pack | 14 | Outer bearing cap N.D.E. |

# KZR & KZ series

## Arrangement & Parts list

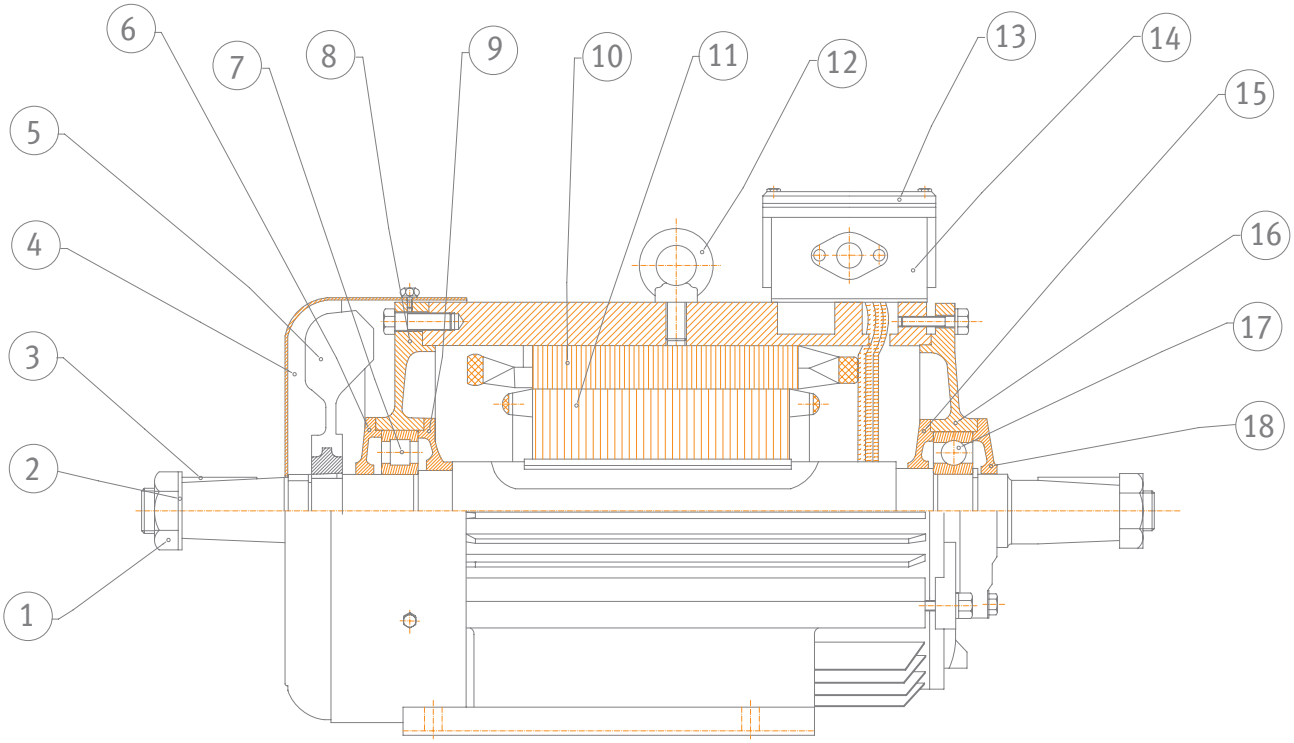


KZ 160 ~ 250

| | | | |
|---|---|---|---|
| 1 | Hexagon nut | 10 | Stator lamination pack |
| 2 | Lock washer | 11 | Rotor lamination pack |
| 3 | Shaft and key | 12 | Eyebolt |
| 4 | Fan cowl | 13 | Terminal box lid |
| 5 | Fan | 14 | Terminal box base |
| 6 | Outer bearing cap D.E. | 15 | Inner bearing cap N.D.E. |
| 7 | Bearing D.E. | 16 | Endshield N.D.E. |
| 8 | Endshield D.E. | 17 | Bearing N.D.E. |
| 9 | Inner bearing cap D.E. | 18 | Outer bearing cap N.D.E. |

# KZR & KZ series

## Arrangement & Parts list

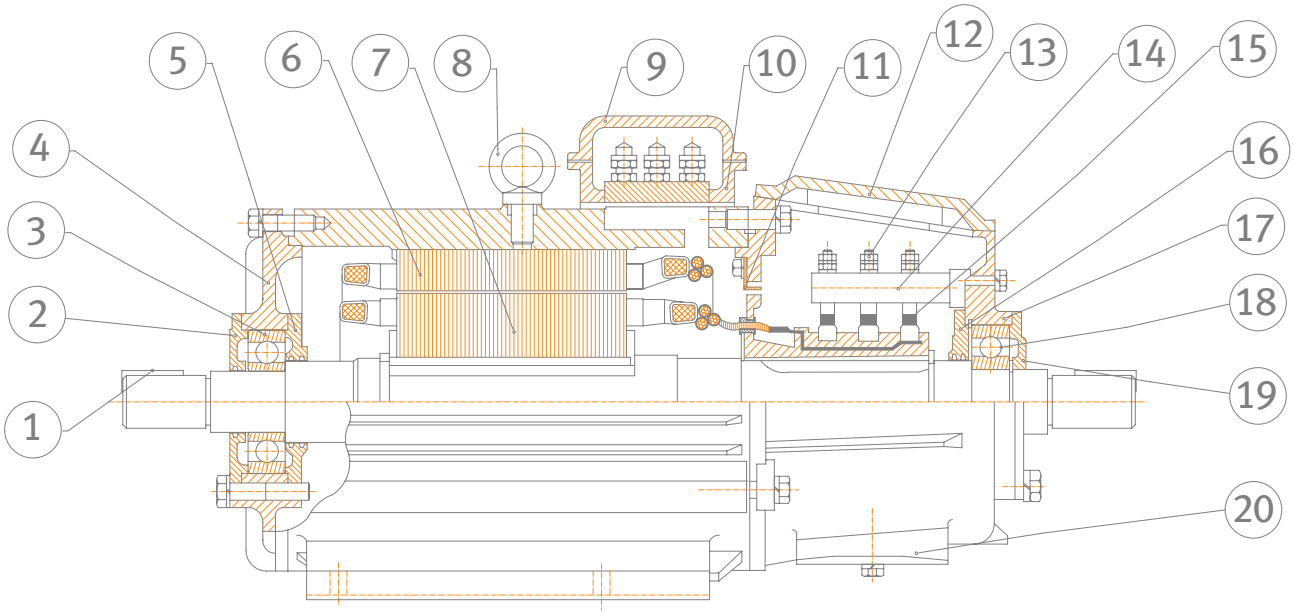


KZR 112 ~ 132

| | | | |
|---|---|---|---|
| 1 | Shaft and key | 11 | Dust shield (divider shield) |
| 2 | Outer bearing cap D.E. | 12 | Inspection cover |
| 3 | Bearing D.E. | 13 | Brush holder |
| 4 | Endshield D.E. | 14 | Brush holder mounting rod |
| 5 | Inner bearing cap D.E. | 15 | Slip ring |
| 6 | Stator lamination pack | 16 | Inner bearing cap N.D.E. |
| 7 | Rotor lamination pack | 17 | Endshield N.D.E. |
| 8 | Eyebolt | 18 | Bearing N.D.E. |
| 9 | Terminal box lid | 19 | Outer bearing cap N.D.E. |
| 10 | Terminal box base | 20 | Dust – vent lid |

# KZR & KZ series

## Arrangement & Parts list

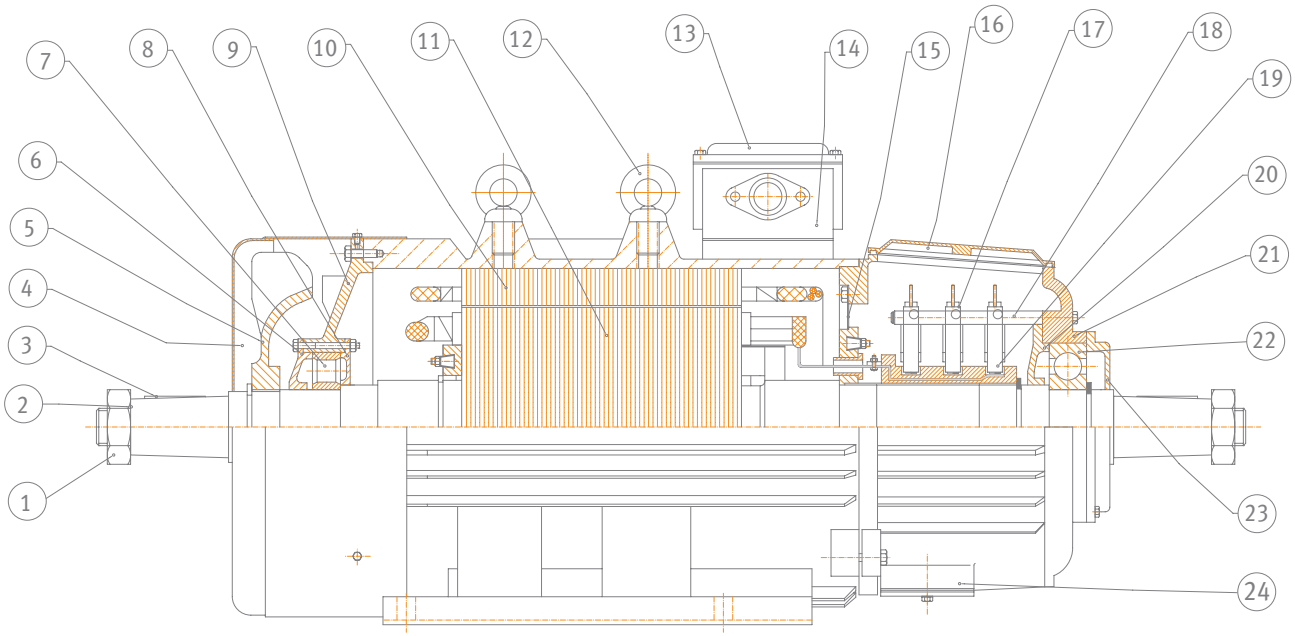


KZR 160 ~ 355

| | |
|---|---|
| 1 | Hexagon nut |
| 2 | Lock washer |
| 3 | Shaft and key |
| 4 | Fan cowl |
| 5 | Fan |
| 6 | Outer bearing cap D.E. |
| 7 | Bearing D.E. |
| 8 | Endshield D.E. |
| 9 | Inner bearing cap D.E. |
| 10 | Stator lamination pack |
| 11 | Rotor lamination pack |
| 12 | Eyebolt |
| 13 | Terminal box lid |
| 14 | Terminal box base |
| 15 | Dust shield (divider shield) |
| 16 | Inspection cover |
| 17 | Brush holder |
| 18 | Brush holder mounting rod |
| 19 | Slip ring |
| 20 | Inner bearing cap N.D.E. |
| 21 | Endshield N.D.E. |
| 22 | Bearing N.D.E. |
| 23 | Outer bearing cap N.D.E. |
| 24 | Dust – vent lid |

# KZR & KZ series

Three-phase crane motors

## KZ112 ~ 132 IM1

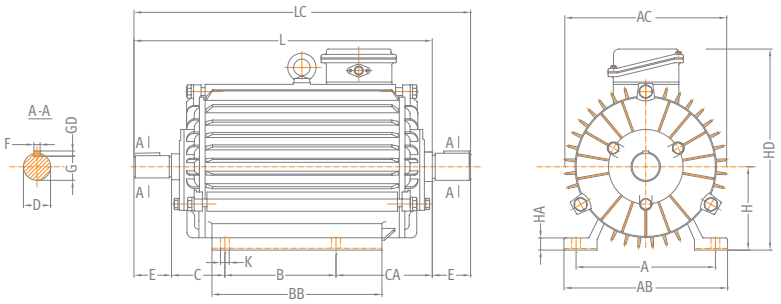


## KZ160 IM1

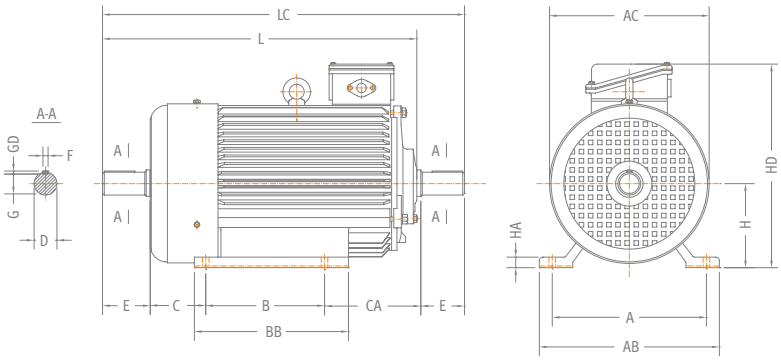


## KZ180 ~ 250 IM1

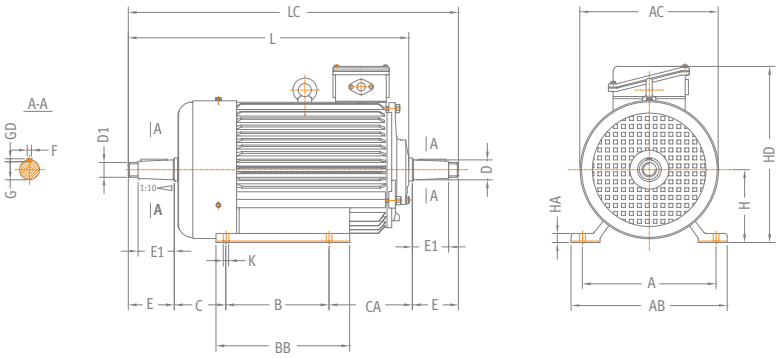


### KZ 112 ~ 250 IM1 Outline dimensions

| Frame size | H | A | B | C | CA | K | D | D1 | E | E1 | F | G | GD | AC | AB | HD | BB | L | LC | HA |
|---|---|---|---|---|---|---|---|---|---|---|---|---|---|---|---|---|---|---|---|---|
| KZ112M | 112 | 190 | 140 | 70 | 135 | 12 | 32 | - | 80 | - | 10 | 27 | 8 | 245 | 250 | 330 | 235 | 420 | 505 | 15 |
| KZ132M | 132 | 216 | 178 | 89 | 150 | 12 | 38 | - | 80 | - | 10 | 33 | 8 | 285 | 275 | 355 | 260 | 495 | 577 | 17 |
| KZ160M | 160 | 254 | 210 | 108 | 180 | 14.5 | 48 | - | 110 | - | 14 | 42.5 | 9 | 325 | 320 | 420 | 290 | 608 | 718 | 20 |
| KZ160L | 160 | 254 | 254 | 108 | 180 | 14.5 | 48 | - | 110 | - | 14 | 42.5 | 9 | 325 | 320 | 420 | 335 | 650 | 762 | 20 |
| KZ180L | 180 | 279 | 279 | 121 | 180 | 14.5 | 55 | M36x3 | 110 | 82 | 14 | 19.9 | 9 | 360 | 360 | 460 | 380 | 685 | 800 | 22 |
| KZ200L | 200 | 318 | 305 | 133 | 210 | 18.5 | 60 | M42x3 | 140 | 105 | 16 | 21.4 | 10 | 405 | 405 | 510 | 400 | 780 | 928 | 25 |
| KZ225M | 225 | 356 | 311 | 149 | 258 | 18.5 | 65 | M42x3 | 140 | 105 | 16 | 23.9 | 10 | 430 | 455 | 545 | 410 | 850 | 998 | 28 |
| KZ250M | 250 | 406 | 349 | 168 | 295 | 24 | 70 | M48x3 | 140 | 105 | 18 | 25.4 | 11 | 480 | 515 | 605 | 510 | 935 | 1092 | 30 |

# KZR & KZ series

Three-phase crane motors

## KZR112 ~ 132 IM1

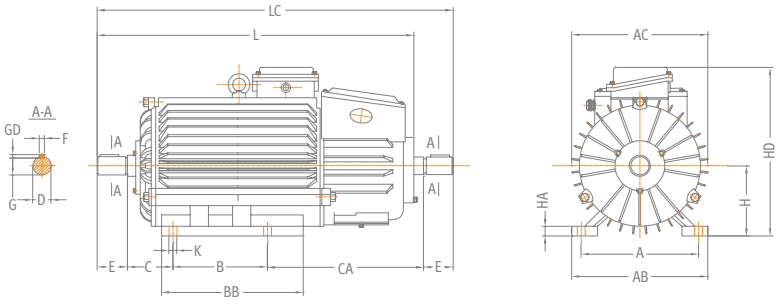


## KZR160 IM1

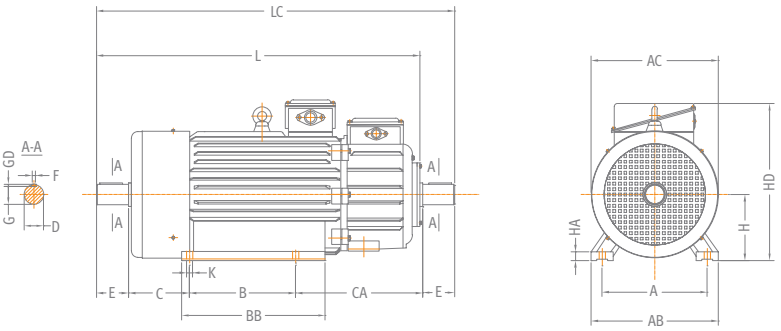


## KZR180 ~ 400 IM1

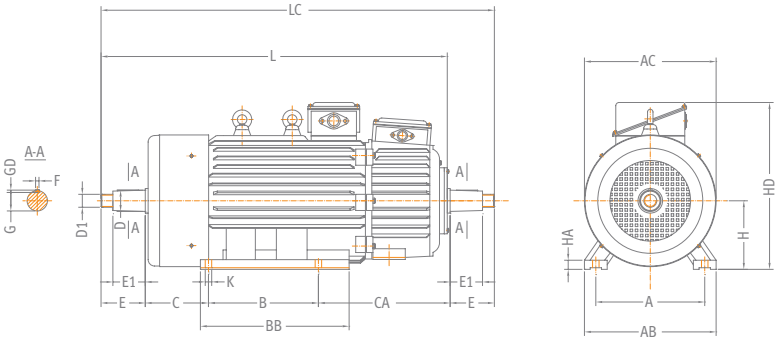


KZR 112 ~ 315 IM3 outline and mount dimensions

| Frame size | H | A | B | C | CA | K | D | D1 | E | E1 | F | G | GD | AC | AB | HD | BB | L | LC | HA |
|---|---|---|---|---|---|---|---|---|---|---|---|---|---|---|---|---|---|---|---|---|
| KZR112M | 112 | 190 | 140 | 70 | 300 | 12 | 32 | - | 80 | - | 10 | 27 | 8 | 245 | 250 | 330 | 235 | 590 | 670 | 15 |
| KZR132M | 132 | 216 | 178 | 89 | 300 | 12 | 38 | - | 80 | - | 10 | 33 | 8 | 285 | 275 | 360 | 260 | 645 | 727 | 17 |
| KZR160M | 160 | 254 | 210 | 108 | 330 | 14.5 | 48 | - | 110 | - | 14 | 42.5 | 9 | 325 | 320 | 420 | 290 | 758 | 868 | 20 |
| KZR160L | 160 | 254 | 254 | 108 | 330 | 14.5 | 48 | - | 110 | - | 14 | 42.5 | 9 | 325 | 320 | 420 | 335 | 800 | 912 | 20 |
| KZR180L | 180 | 279 | 279 | 121 | 360 | 14.5 | 55 | M36x3 | 110 | 82 | 14 | 19.9 | 9 | 360 | 360 | 460 | 380 | 870 | 980 | 22 |
| KZR200L | 200 | 318 | 305 | 133 | 400 | 18.5 | 60 | M42x3 | 140 | 105 | 16 | 21.4 | 10 | 405 | 405 | 510 | 400 | 975 | 1118 | 25 |
| KZR225M | 225 | 356 | 311 | 149 | 450 | 18.5 | 65 | M42x3 | 140 | 105 | 16 | 23.9 | 10 | 430 | 455 | 545 | 410 | 1050 | 1190 | 28 |
| KZR250M | 250 | 406 | 349 | 168 | 540 | 24 | 70 | M48x3 | 140 | 105 | 18 | 25.4 | 11 | 480 | 515 | 605 | 510 | 1195 | 1337 | 30 |
| KZR280S | 280 | 457 | 368 | 190 | 540 | 24 | 85 | M56x4 | 170 | 130 | 20 | 31.7 | 12 | 535 | 575 | 665 | 530 | 1265 | 1438 | 32 |
| KZR280M | 280 | 457 | 419 | 190 | 540 | 24 | 85 | M56x4 | 170 | 130 | 20 | 31.7 | 12 | 535 | 575 | 665 | 580 | 1315 | 1489 | 32 |
| KZR315S | 315 | 508 | 406 | 216 | 600 | 28 | 95 | M64x4 | 170 | 130 | 22 | 35.2 | 14 | 620 | 640 | 750 | 580 | 1390 | 1562 | 35 |
| KZR315M | 315 | 508 | 457 | 216 | 600 | 28 | 95 | M64x4 | 170 | 130 | 22 | 35.2 | 14 | 620 | 640 | 750 | 630 | 1440 | 1613 | 35 |
| KZR355M | 355 | 610 | 560 | 254 | 630 | 28 | 110 | M80x4 | 210 | 165 | 25 | 41.9 | 14 | 710 | 740 | 840 | 730 | 1650 | 1864 | 38 |
| KZR355L | 355 | 610 | 630 | 254 | 630 | 28 | 110 | M80x4 | 210 | 165 | 25 | 41.9 | 14 | 710 | 740 | 840 | 800 | 1720 | 1934 | 38 |
| KZR400L | 400 | 686 | 710 | 280 | 630 | 35 | 130 | M100x4 | 250 | 200 | 28 | 50 | 16 | 840 | 855 | 950 | 910 | 1865 | 2120 | 45 |

# KZR & KZ series

Three-phase crane motors

## KZ 112 ~ 132 IM3

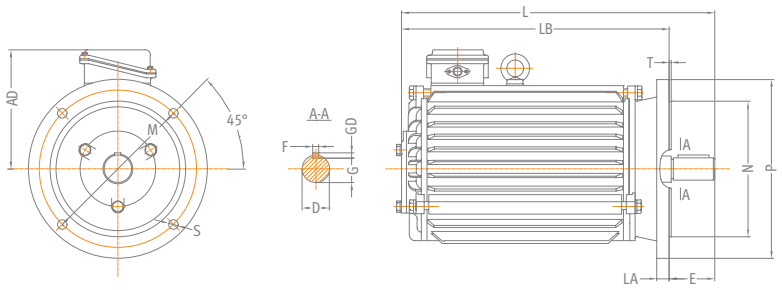


## KZ 160 IM3

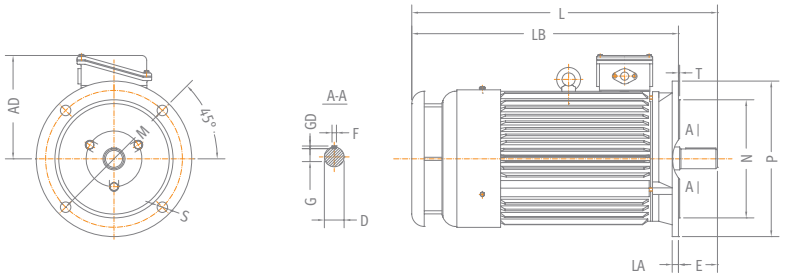


## KZ 180 IM3

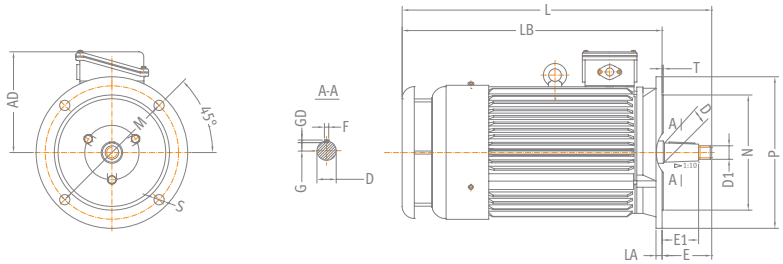


## KZ 200~250 IM3

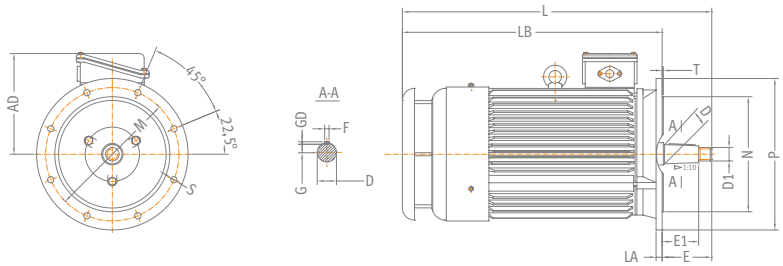


KZR 112 ~ 315 IM3 outline and mount dimensions

| Frame size | The symbol of flange | M | N | P | LA | T | S | D | D1 | E | E1 | F | G | GD | L | AD | LB |
|---|---|---|---|---|---|---|---|---|---|---|---|---|---|---|---|---|---|
| KZ112M | F 215 | 215 | 180 | 250 | 14 | 4 | 4x∅14.5 | 32 | - | 80 | - | 10 | 27 | 8 | 430 | 220 | 350 |
| KZ132M | F 265 | 265 | 230 | 300 | 14 | 4 | 4x∅14.5 | 38 | - | 80 | - | 10 | 33 | 8 | 495 | 230 | 415 |
| KZ160M | F 300 | 300 | 250 | 350 | 18 | 5 | 4x∅18.5 | 48 | - | 110 | - | 14 | 42.5 | 9 | 700 | 250 | 590 |
| KZ160L | F 300 | 300 | 250 | 350 | 18 | 5 | 4x∅18.5 | 48 | - | 110 | - | 14 | 42.5 | 9 | 743 | 250 | 633 |
| KZ180L | F 300 | 300 | 250 | 350 | 18 | 5 | 4x∅18.5 | 55 | M36x3 | 110 | 82 | 14 | 19.9 | 9 | 735 | 280 | 625 |
| KZ200L | F 400 | 400 | 350 | 450 | 20 | 5 | 8x∅18.5 | 60 | M42x3 | 140 | 105 | 16 | 21.4 | 10 | 855 | 310 | 715 |
| KZ225L | F 400 | 400 | 350 | 450 | 20 | 5 | 8x∅18.5 | 65 | M42x3 | 140 | 105 | 16 | 23.9 | 10 | 915 | 320 | 775 |
| KZ250M | F 500 | 500 | 450 | 550 | 22 | 5 | 8x∅18.5 | 70 | M48x3 | 140 | 105 | 18 | 25.4 | 11 | 1005 | 355 | 865 |

# KZR & KZ series

## Dimension sheet

KZR 112 ~ 132 IM3

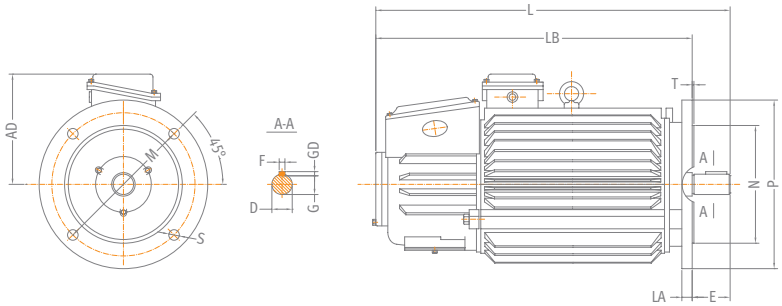


KZR 160 IM3

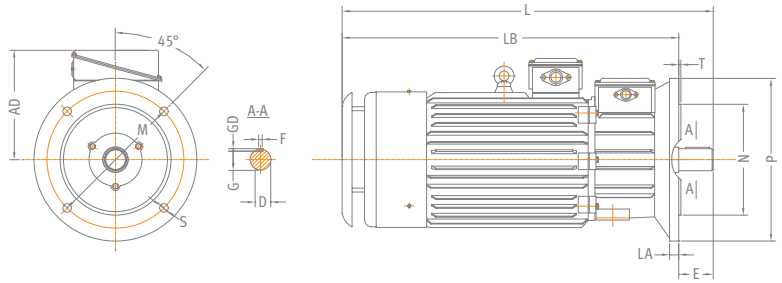


KZR 180 IM3

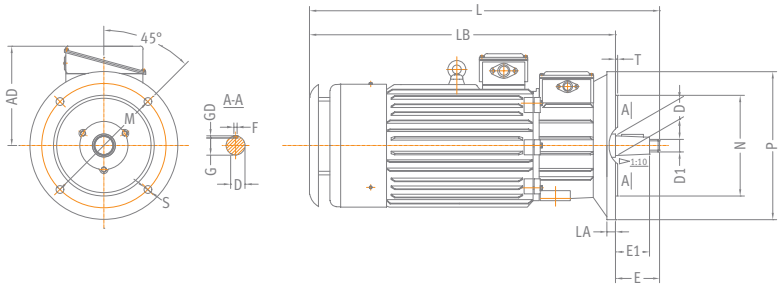


KZR 200 ~ 315 IM3

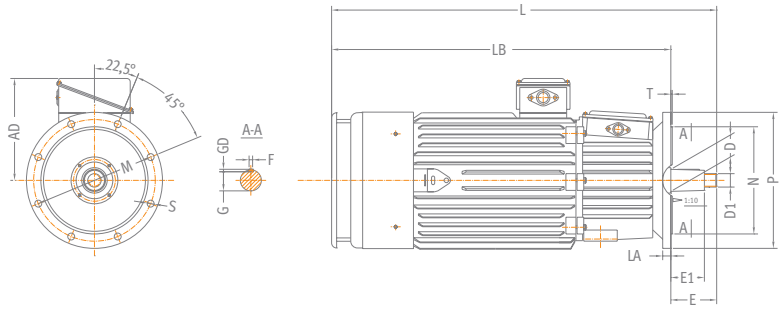


KZR 112 ~ 315 IM3 outline and mount dimensions

| Frame size | The symbol of flange | M | N | P | LA | T | S | D | D1 | E | E1 | F | G | GD | L | AD | LB |
|---|---|---|---|---|---|---|---|---|---|---|---|---|---|---|---|---|---|
| KZR112M | F 215 | 215 | 180 | 250 | 14 | 4 | 4x∅14.5 | 32 | - | 80 | - | 10 | 27 | 8 | 595 | 220 | 515 |
| KZR132M | F 265 | 265 | 230 | 300 | 14 | 4 | 4x∅14.5 | 38 | - | 80 | - | 10 | 33 | 8 | 645 | 230 | 565 |
| KZR160M | F 300 | 300 | 250 | 350 | 18 | 5 | 4x∅18.5 | 48 | - | 110 | - | 14 | 42.5 | 9 | 828 | 250 | 718 |
| KZR160L | F 300 | 300 | 250 | 350 | 18 | 5 | 4x∅18.5 | 48 | - | 110 | - | 14 | 42.5 | 9 | 872 | 250 | 762 |
| KZR180L | F 300 | 300 | 250 | 350 | 18 | 5 | 4x∅18.5 | 55 | M36x3 | 110 | 82 | 14 | 19.9 | 9 | 915 | 280 | 805 |
| KZR200L | F 400 | 400 | 350 | 450 | 20 | 5 | 8x∅18.5 | 60 | M42x3 | 140 | 105 | 16 | 21.4 | 10 | 1050 | 310 | 910 |
| KZR225M | F 400 | 400 | 350 | 450 | 20 | 5 | 8x∅18.5 | 65 | M42x3 | 140 | 105 | 16 | 23.9 | 10 | 1110 | 320 | 970 |
| KZR250M | F 500 | 500 | 450 | 550 | 22 | 5 | 8x∅18.5 | 70 | M48x3 | 140 | 105 | 18 | 25.4 | 11 | 1266 | 355 | 1126 |
| KZR280S | F 500 | 500 | 450 | 550 | 22 | 5 | 8x∅18.5 | 85 | M56x3 | 170 | 130 | 20 | 31.7 | 12 | 1370 | 385 | 1200 |
| KZR280M | F 500 | 500 | 450 | 550 | 22 | 5 | 8x∅18.5 | 85 | M56x3 | 170 | 130 | 20 | 31.7 | 12 | 1420 | 385 | 1250 |
| KZR315S | F 600 | 600 | 550 | 660 | 25 | 6 | 8x∅24 | 95 | M64x3 | 170 | 130 | 22 | 35.2 | 14 | 1475 | 435 | 1305 |
| KZR315M | F 600 | 600 | 550 | 660 | 25 | 6 | 8x∅24 | 95 | M64x3 | 170 | 130 | 22 | 35.2 | 14 | 1525 | 435 | 1355 |

# KΔ series

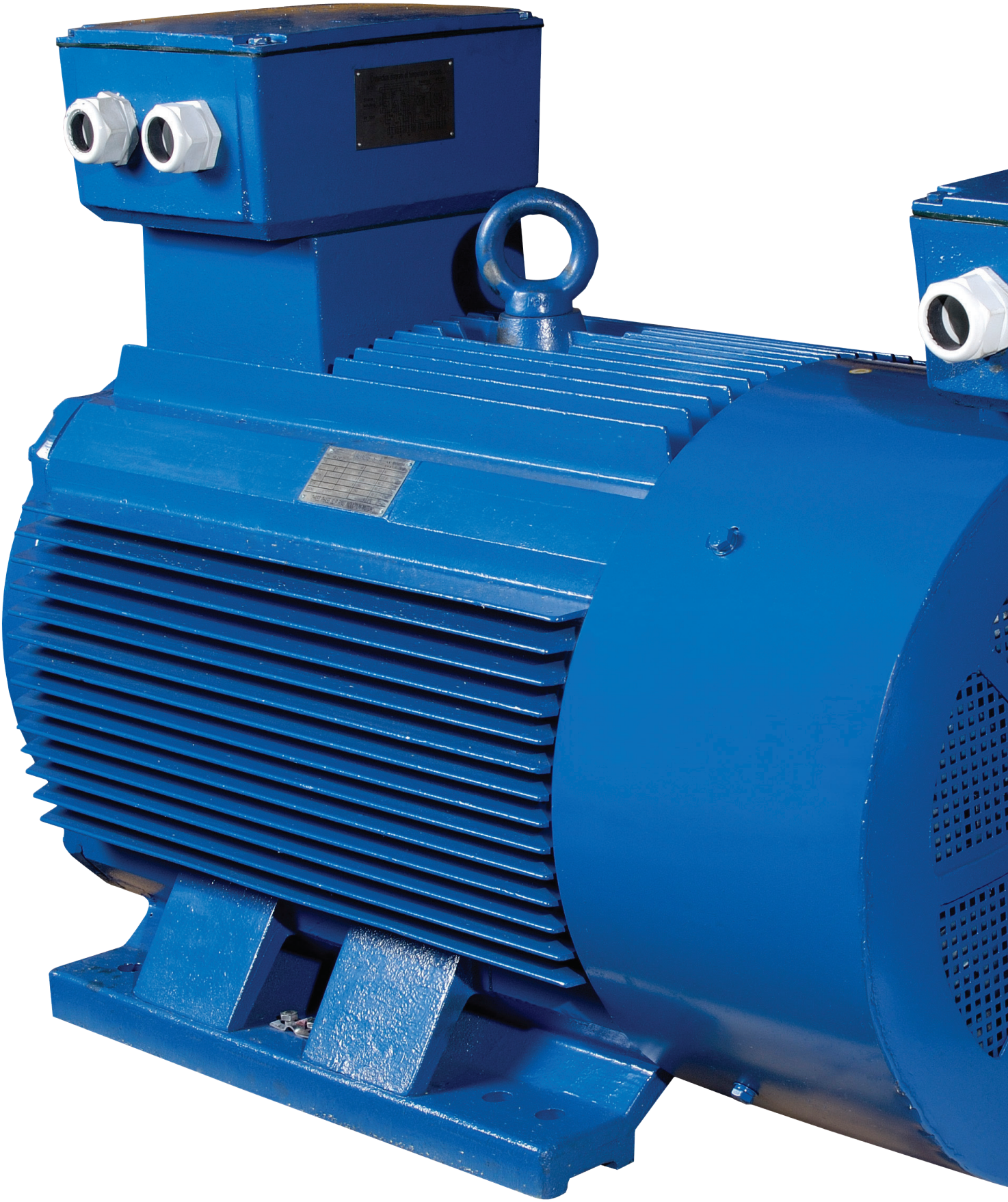

# KΔ series

Three-phase asynchronus motors
with a wound rotor (H 132-450)

# KΔ series

Three-phase asynchronus motors with a wound rotor (H 132-450)

**4 POLES-1.500 Rpm**
380 V / 50Hz
Insulation class F

| TYPE | Power (KW) | Electric Current (A) | Rotating Speed (r/min) | Efficiency (%) | Power Factor Cos φ | Max. Torque Rated Torque | Rotor | | Noise dB (A) | Vibration (mm/s) | Rotating inertia (Kgm²) | Weight (Kg) |
|---|---|---|---|---|---|---|---|---|---|---|---|---|
| | | | | | | | Voltage (V) | Electric Current (A) | | | | |
| 132M1 | 4 | 9.4 | 1421 | 84.5 | 0.77 | 3.0 | 230 | 11.5 | 86 | 1.8 | 0.15 | 88 |
| 132M2 | 5.5 | 12.5 | 1434 | 86 | 0.77 | 3.0 | 272 | 13 | 86 | 1.8 | 0.17 | 96 |
| 160M | 7.5 | 15.8 | 1444 | 87.5 | 0.83 | 3.0 | 250 | 19.5 | 90 | 2.8 | 0.23 | 108 |
| 160L | 11 | 22.8 | 1426 | 89.5 | 0.83 | 3.0 | 276 | 25 | 90 | 2.8 | 0.27 | 115 |
| 180L | 15 | 30.1 | 1434 | 89.5 | 0.85 | 3.0 | 278 | 34 | 94 | 2.8 | 0.39 | 205 |
| 200L1 | 18.5 | 35.9 | 1439 | 89.0 | 0.86 | 3.0 | 263.6 | 44 | 94 | 2.8 | 0.51 | 277 |
| 200L2 | 22 | 43.1 | 1448 | 90.0 | 0.86 | 3.0 | 293 | 47 | 94 | 2.8 | 0.54 | 290 |
| 225M2 | 30 | 57.6 | 1442 | 91.0 | 0.87 | 3.0 | 360 | 51.5 | 98 | 2.8 | 0.93 | 350 |
| 250M1 | 37 | 70.6 | 1448 | 91.5 | 0.86 | 3.0 | 289 | 79 | 98 | 3.5 | 1.29 | 480 |
| 250M2 | 45 | 85.9 | 1453 | 91.5 | 0.87 | 3.0 | 340 | 81 | 100 | 3.5 | 1.43 | 500 |
| 280S | 55 | 103.8 | 1457 | 91.5 | 0.88 | 3.0 | 485 | 70 | 100 | 3.5 | 2.27 | 620 |
| 280M | 75 | 135 | 1458 | 92.5 | 0.88 | 3.0 | 468 | 97.4 | 103 | 3.5 | 2.89 | 720 |
| 315S | 90 | 162 | 1485 | 92.5 | 0.86 | 3.0 | 548 | 100 | 103 | 3.5 | 4.65 | 1060 |
| 315M1 | 110 | 201 | 1485 | 93.0 | 0.86 | 3.0 | 525 | 127 | 103 | 3.5 | 5.22 | 1080 |
| 315M2 | 132 | 240 | 1485 | 93.2 | 0.86 | 3.0 | 601 | 133 | 106 | 3.5 | 5.68 | 1125 |
| 315L | 160 | 284 | 1486 | 93.2 | 0.86 | 3.0 | 722 | 134 | 106 | 3.5 | 6.47 | 1131 |
| 355M1 | 160 | 286 | 1483 | 93.3 | 0.87 | 3.0 | 352 | 277 | 106 | 3.5 | 11.54 | 1650 |
| 355M2 | 185 | 326 | 1483 | 93.5 | 0.87 | 3.0 | 385 | 293 | 106 | 3.5 | 12.58 | 1723 |
| 355L1 | 200 | 355 | 1486 | 94.0 | 0.87 | 3.3 | 422 | 288 | 106 | 3.5 | 13.04 | 1740 |
| 355L2 | 220 | 389 | 1486 | 94.0 | 0.87 | 3.3 | 483 | 277 | 106 | 3.5 | 14.20 | 1825 |
| 355L3 | 250 | 444 | 1487 | 94.0 | 0.87 | 3.5 | 528 | 287 | 108 | 3.5 | 15.13 | 1900 |
| 355L4 | 280 | 495 | 1488 | 94.0 | 0.87 | 3.5 | 604 | 281 | 108 | 3.5 | 16.98 | 2115 |
| 400M1 | 280 | 512 | 1488 | 94.2 | 0.86 | 3.5 | 545 | 311 | 108 | 3.5 | 21.51 | 2721 |
| 400M2 | 315 | 566 | 1489 | 94.2 | 0.86 | 3.5 | 595 | 320 | 108 | 3.5 | 23.54 | 2823 |
| 400M3 | 355 | 631 | 1489 | 94.5 | 0.87 | 3.5 | 674 | 318 | 108 | 3.5 | 26.07 | 2960 |
| 400M4 | 400 | 716 | 1489 | 94.5 | 0.87 | 3.5 | 778 | 311 | 108 | 3.5 | 28.35 | 3082 |
| 400L1 | 450 | 795 | 1490 | 94.8 | 0.89 | 2.5 | 847 | 320 | 108 | 3.5 | 33.01 | 3295 |
| 400L2 | 500 | 905 | 1490 | 94.8 | 0.89 | 2.5 | 977 | 308 | 108 | 3.5 | 35.60 | 3350 |
| 450 1 | 500 | 858 | 1492 | 95.2 | 0.89 | 2.8 | 722 | 412 | 108 | 3.5 | | |
| 450 2 | 560 | 962 | 1493 | 95.3 | 0.89 | 2.8 | 867 | 384 | 111 | 3.5 | | |
| 450 3 | 630 | 1076 | 1493 | 95.4 | 0.9 | 2.8 | 878 | 427 | 111 | 3.5 | | |
| 450 4 | 710 | 1219 | 1494 | 95.5 | 0.9 | 2.8 | 1085 | 389 | 111 | 3.5 | | |
| 450 5 | 800 | 1361 | 1493 | 95.6 | 0.9 | 2.8 | 1121 | 424 | 111 | 3.5 | | |

# KΔ series

Three-phase asynchronus motors with a wound rotor (H 132-450)

**6 POLES-1.000 Rpm**
380 V / 50Hz
Insulation class F

| TYPE | Power (KW) | Electric Current (A) | Rotating Speed (r/min) | Efficiency (%) | Power Factor Cos φ | Max. Torque Rated Torque | Rotor | | Noise dB (A) | Vibration (mm/s) | Rotating inertia (Kgm²) | Weight (Kg) |
|---|---|---|---|---|---|---|---|---|---|---|---|---|
| | | | | | | | Voltage (V) | Electric Current (A) | | | | |
| 132M1 | 3 | 8 | 949 | 80.5 | 0.69 | 2.8 | 206 | 9.5 | 82 | 1.8 | 0.20 | 89 |
| 132M2 | 4 | 10.7 | 949 | 82.0 | 0.69 | 2.8 | 230 | 11 | 82 | 1.8 | 0.21 | 97 |
| 160M | 5.5 | 13.2 | 940 | 84.5 | 0.74 | 2.8 | 244 | 14.5 | 82 | 2.8 | 0.28 | 145 |
| 160L | 7.5 | 17.8 | 947 | 86.0 | 0.74 | 2.8 | 266 | 18 | 85 | 2.8 | 0.32 | 153 |
| 180L | 11 | 23.6 | 949 | 87.5 | 0.81 | 2.8 | 310 | 22.5 | 85 | 2.8 | 0.46 | 203 |
| 200L1 | 15 | 31.8 | 955 | 88.5 | 0.81 | 2.8 | 198 | 48 | 88 | 2.8 | 0.67 | 280 |
| 200L2 | 18.5 | 38.3 | 955 | 88.5 | 0.83 | 2.8 | 187 | 62.5 | 88 | 2.8 | 0.92 | 330 |
| 225M2 | 22 | 45 | 964 | 89.5 | 0.83 | 2.8 | 224 | 61 | 88 | 2.8 | 1.03 | 350 |
| 250M1 | 30 | 60.3 | 966 | 90.0 | 0.84 | 2.8 | 282 | 66 | 91 | 3.5 | 1.80 | 480 |
| 250M2 | 37 | 73.9 | 967 | 90.5 | 0.84 | 2.8 | 331 | 69 | 91 | 3.5 | 1.95 | 510 |
| 280S | 45 | 87.9 | 969 | 91.5 | 0.85 | 2.8 | 362 | 76 | 94 | 3.5 | 3.06 | 620 |
| 280M | 55 | 106.9 | 972 | 92.0 | 0.85 | 2.8 | 423 | 80 | 94 | 3.5 | 3.40 | 670 |
| 315S | 75 | 142 | 989 | 93.0 | 0.85 | 2.8 | 419 | 108 | 98 | 3.5 | 7.47 | 930 |
| 315M1 | 90 | 171 | 991 | 93.5 | 0.85 | 2.8 | 516 | 105 | 98 | 3.5 | 8.70 | 1050 |
| 315M2 | 110 | 207 | 991 | 93.5 | 0.85 | 2.8 | 611 | 108 | 98 | 3.5 | 9.86 | 1205 |
| 315L | 132 | 246 | 993 | 93.5 | 0.85 | 2.8 | 604 | 131 | 102 | 3.5 | 10.80 | 1414 |
| 355M1 | 132 | 246 | 988 | 92.8 | 0.86 | 2.5 | 301 | 269 | 102 | 3.5 | 14.54 | 1630 |
| 355M2 | 160 | 292 | 988 | 93 | 0.86 | 2.5 | 349 | 280 | 102 | 3.5 | 15.73 | 1703 |
| 355L1 | 185 | 336 | 990 | 93.3 | 0.86 | 2.5 | 402 | 280 | 102 | 3.5 | 17.52 | 1825 |
| 355L2 | 200 | 370 | 990 | 93.5 | 0.86 | 2.8 | 442 | 276 | 102 | 3.5 | 19.31 | 1923 |
| 355L3 | 220 | 404 | 991 | 93.6 | 0.86 | 2.8 | 474 | 283 | 102 | 3.5 | 20.50 | 1990 |
| 355L4 | 250 | 459 | 991 | 93.8 | 0.86 | 3.0 | 553 | 273 | 105 | 3.5 | 22.89 | 2110 |
| 400M1 | 250 | 447 | 991 | 94.8 | 0.85 | 3.0 | 545 | 274 | 105 | 3.5 | 30.76 | 2698 |
| 400M2 | 280 | 495 | 991 | 94.8 | 0.86 | 3.0 | 578 | 290 | 105 | 3.5 | 32.75 | 2775 |
| 400M3 | 315 | 557 | 992 | 95.0 | 0.86 | 3.0 | 655 | 287 | 105 | 3.5 | 36.07 | 2889 |
| 400M4 | 355 | 629 | 992 | 95.0 | 0.86 | 3.0 | 736 | 288 | 105 | 3.5 | 39.38 | 3012 |
| 400L1 | 400 | 707 | 993 | 95.2 | 0.86 | 2.8 | 870 | 274 | 105 | 3.5 | 46.18 | 3261 |
| 400L2 | 450 | 788 | 993 | 95.2 | 0.86 | 2.8 | 958 | 280 | 105 | 3.5 | 51.49 | 3429 |
| 400L3 | 500 | 880 | 993 | 95.2 | 0.87 | 2.8 | 1064 | 279 | 105 | 3.5 | 53.26 | 3461 |
| 450 1 | 500 | 879 | 994 | 95.3 | 0.87 | 2.8 | 972 | 306 | 105 | 3.5 | | |
| 450 2 | 560 | 982 | 994 | 95.4 | 0.87 | 2.8 | 1080 | 308 | 108 | 3.5 | | |
| 450 3 | 630 | 1101 | 994 | 95.5 | 0.87 | 2.8 | 1216 | 308 | 105 | 3.5 | | |
| 450 4 | 710 | 1243 | 994 | 95.6 | 0.87 | 2.8 | 1390 | 303 | 108 | 3.5 | | |

# KΔ series

Three-phase asynchronus motors with a wound rotor (H 132-450)

**8 POLES-750 Rpm**
380 V / 50Hz
Insulation class F

| TYPE | Power (KW) | Electric Current (A) | Rotating Speed (r/min) | Efficiency (%) | Power Factor Cos φ | Max. Torque Rated Torque | Rotor | | Noise dB (A) | Vibration (mm/s) | Rotating inertia (Kgm²) | Weight (Kg) |
|---|---|---|---|---|---|---|---|---|---|---|---|---|
| | | | | | | | Voltage (V) | Electric Current (A) | | | | |
| 160M | 4 | 10.5 | 703 | 82.5 | 0.69 | 2.4 | 216 | 12 | 78 | 2.8 | 0.27 | 140 |
| 160L | 5.5 | 14.1 | 705 | 83.0 | 0.71 | 2.4 | 230 | 15.5 | 78 | 2.8 | 0.31 | 155 |
| 180L | 7.5 | 18.5 | 692 | 85.0 | 0.73 | 2.4 | 255 | 19 | 82 | 2.8 | 0.44 | 195 |
| 200L1 | 11 | 26.6 | 699 | 86.0 | 0.73 | 2.4 | 152 | 46 | 82 | 2.8 | 0.66 | 279 |
| 225M1 | 15 | 34.5 | 706 | 88.0 | 0.75 | 2.4 | 169 | 56 | 86 | 2.8 | 1.01 | 330 |
| 225M2 | 18.5 | 42.1 | 712 | 89.0 | 0.75 | 2.4 | 211 | 54 | 86 | 2.8 | 1.17 | 360 |
| 250M1 | 22 | 48.1 | 710 | 89.0 | 0.78 | 2.4 | 210 | 65.5 | 86 | 3.5 | 1.77 | 480 |
| 250M2 | 30 | 65.3 | 713 | 89.5 | 0.77 | 2.4 | 256 | 73 | 90 | 3.5 | 2.02 | 510 |
| 280S | 37 | 79 | 715 | 91.0 | 0.79 | 2.4 | 281 | 81.5 | 90 | 3.5 | 2.97 | 640 |
| 280M | 45 | 92.9 | 725 | 92.0 | 0.80 | 2.4 | 359 | 76 | 93 | 3.5 | 3.73 | 720 |
| 315S | 55 | 113 | 740 | 92.2 | 0.79 | 2.4 | 339 | 98 | 93 | 3.5 | 7.47 | 970 |
| 315M1 | 75 | 150 | 741 | 92.5 | 0.79 | 2.4 | 432 | 105 | 96 | 3.5 | 9.06 | 1010 |
| 315M2 | 90 | 182 | 742 | 92.6 | 0.79 | 2.4 | 528 | 102 | 96 | 3.5 | 10.39 | 1060 |
| 315L | 110 | 220 | 743 | 92.6 | 0.79 | 2.4 | 635 | 104 | 96 | 3.5 | 10.10 | 1352 |
| 355M1 | 110 | 218 | 740 | 92.0 | 0.79 | 2.4 | 281 | 239 | 96 | 3.5 | 15.01 | 1485 |
| 355M2 | 132 | 262 | 741 | 92.4 | 0.79 | 2.5 | 330 | 244 | 99 | 3.5 | 16.72 | 1565 |
| 355L1 | 160 | 316 | 742 | 92.5 | 0.79 | 2.5 | 400 | 244 | 99 | 3.5 | 19.53 | 1640 |
| 355L2 | 185 | 356 | 742 | 92.6 | 0.79 | 2.6 | 448 | 252 | 99 | 3.5 | 22.34 | 1703 |
| 355L3 | 200 | 392 | 743 | 93.0 | 0.79 | 2.6 | 475 | 256 | 99 | 3.5 | 23.59 | 1731 |
| 355L4 | 220 | 436 | 743 | 93.0 | 0.79 | 2.6 | 543 | 246 | 99 | 3.5 | 26.40 | 1792 |
| 400M1 | 220 | 428 | 742 | 94.2 | 0.77 | 2.8 | 422 | 313 | 99 | 3.5 | 33.92 | 2785 |
| 400M2 | 250 | 485 | 743 | 94.2 | 0.77 | 2.8 | 475 | 315 | 102 | 3.5 | 37.91 | 2929 |
| 400M3 | 280 | 548 | 743 | 94.2 | 0.77 | 2.8 | 542 | 308 | 102 | 3.5 | 41.92 | 3061 |
| 400L1 | 315 | 623 | 744 | 94.5 | 0.77 | 2.8 | 633 | 297 | 102 | 3.5 | 45.24 | 3194 |
| 400L2 | 355 | 694 | 744 | 94.5 | 0.78 | 2.8 | 691 | 306 | 102 | 3.5 | 49.23 | 3343 |
| 400L3 | 400 | 775 | 744 | 94.5 | 0.78 | 2.8 | 760 | 313 | 102 | 3.5 | 53.88 | 3513 |
| 450 1 | 400 | 776 | 745 | 94.6 | 0.79 | 2.8 | 704 | 337 | 102 | 3.5 | | |
| 450 2 | 450 | 863 | 745 | 94.7 | 0.79 | 2.8 | 775 | 345 | 102 | 3.5 | | |
| 450 3 | 500 | 958 | 745 | 94.8 | 0.79 | 2.8 | 861 | 344 | 102 | 3.5 | | |
| 450 4 | 560 | 1072 | 745 | 95.0 | 0.79 | 2.8 | 969 | 342 | 102 | 3.5 | | |

# KΔ series

Three-phase asynchronus motors with a wound rotor (H 132-450)

**10 POLES-600 Rpm**
380 V / 50Hz
Insulation class F

| TYPE | Power (KW) | Electric Current (A) | Rotating Speed (r/min) | Efficiency (%) | Power Factor Cos φ | Max. Torque Rated Torque | Rotor | | Noise dB (A) | Vibration (mm/s) | Rotating inertia (Kgm²) | Weight (Kg) |
|---|---|---|---|---|---|---|---|---|---|---|---|---|
| | | | | | | | Voltage (V) | Electric Current (A) | | | | |
| 315S | 45 | 97 | 593 | 92.0 | 0.73 | 2.4 | 334 | 81 | 93 | 3.5 | 6.42 | 1025 |
| 315M1 | 55 | 119 | 593 | 92.3 | 0.73 | 2.4 | 409 | 81 | 93 | 3.5 | 7.13 | 1086 |
| 315M2 | 75 | 137 | 594 | 92.5 | 0.73 | 2.4 | 566 | 79 | 96 | 3.5 | 9.09 | 1222 |
| 315L | 90 | 193 | 594 | 92.5 | 0.73 | 2.4 | 672 | 80 | 96 | 3.5 | 9.98 | 1304 |
| 355M1 | 90 | 192 | 592 | 92.5 | 0.73 | 2.5 | 261 | 209 | 96 | 3.5 | 15.22 | 1389 |
| 355M2 | 110 | 235 | 593 | 92.6 | 0.73 | 2.5 | 326 | 204 | 96 | 3.5 | 18.03 | 1545 |
| 355L1 | 132 | 282 | 593 | 92.8 | 0.73 | 2.6 | 372 | 214 | 99 | 3.5 | 21.15 | 1711 |
| 355L2 | 160 | 339 | 594 | 93.0 | 0.73 | 2.6 | 434 | 222 | 99 | 3.5 | 23.96 | 1873 |
| 400M1 | 185 | 382 | 594 | 93.5 | 0.75 | 2.8 | 401 | 276 | 99 | 3.5 | 38.58 | 2829 |
| 400M2 | 200 | 412 | 594 | 93.5 | 0.75 | 2.8 | 435 | 275 | 99 | 3.5 | 41.56 | 2924 |
| 400M3 | 220 | 450 | 594 | 93.5 | 0.75 | 2.8 | 474 | 277 | 99 | 3.5 | 45.28 | 3044 |
| 400L1 | 250 | 513 | 595 | 94.0 | 0.75 | 2.8 | 547 | 273 | 102 | 3.5 | 51.24 | 3230 |
| 400L2 | 280 | 573 | 595 | 94.0 | 0.75 | 2.8 | 608 | 275 | 102 | 3.5 | 56.44 | 3402 |
| 400L3 | 315 | 647 | 595 | 94.0 | 0.75 | 2.8 | 684 | 274 | 102 | 3.5 | 62.40 | 3594 |
| 450 1 | 355 | 712 | 596 | 94.5 | 0.76 | 2.6 | 670 | 314 | 102 | 3.5 | | |
| 450 2 | 400 | 796 | 596 | 94.6 | 0.77 | 2.6 | 766 | 310 | 102 | 3.5 | | |
| 450 3 | 450 | 882 | 596 | 94.7 | 0.77 | 2.6 | 803 | 333 | 102 | 3.5 | | |
| 450 4 | 500 | 980 | 596 | 94.8 | 0.78 | 2.6 | 894 | 332 | 102 | 3.5 | | |

**12 POLES-500 Rpm**
380 V / 50Hz
Insulation class F

| TYPE | Power (KW) | Electric Current (A) | Rotating Speed (r/min) | Efficiency (%) | Power Factor Cos φ | Max. Torque Rated Torque | Rotor | | Noise dB (A) | Vibration (mm/s) | Rotating inertia (Kgm²) | Weight (Kg) |
|---|---|---|---|---|---|---|---|---|---|---|---|---|
| | | | | | | | Voltage (V) | Electric Current (A) | | | | |
| 355M 1 | 55 | 125 | 493 | 92.0 | 0.71 | 2.4 | 217 | 153 | 95 | 3.5 | 14.16 | 1390 |
| 355M 2 | 75 | 168 | 494 | 92.5 | 0.71 | 2.4 | 284 | 158 | 95 | 3.5 | 17.14 | 1530 |
| 355L 2 | 90 | 201 | 494 | 92.5 | 0.71 | 2.4 | 335 | 160 | 95 | 3.5 | 19.59 | 1750 |
| 355L 3 | 110 | 244 | 494 | 92.5 | 0.71 | 2.4 | 410 | 160 | 95 | 3.5 | 23.44 | 1890 |
| 355L 4 | 132 | 294 | 495 | 92.8 | 0.71 | 2.4 | 461 | 170 | 95 | 3.5 | 26.24 | 2010 |
| 400M1 | 132 | 284 | 494 | 93.2 | 0.72 | 2.5 | 407 | 193 | 99 | 3.5 | 35.95 | 2716 |
| 400M2 | 160 | 345 | 494 | 93.2 | 0.72 | 2.5 | 498 | 191 | 99 | 3.5 | 42.65 | 2917 |
| 400M3 | 185 | 396 | 495 | 93.5 | 0.72 | 2.5 | 561 | 196 | 99 | 3.5 | 47.11 | 3055 |
| 400L1 | 200 | 414 | 494 | 93.5 | 0.73 | 2.5 | 587 | 203 | 99 | 3.5 | 51.58 | 3201 |
| 400L2 | 220 | 467 | 495 | 93.5 | 0.73 | 2.5 | 670 | 195 | 99 | 3.5 | 56.05 | 3340 |
| 400L3 | 250 | 528 | 495 | 93.5 | 0.73 | 2.5 | 749 | 198 | 102 | 3.5 | 62.00 | 3533 |
| 450 1 | 250 | 519 | 496 | 93.6 | 0.74 | 2.0 | 594 | 249 | 102 | 3.5 | | |
| 450 2 | 280 | 582 | 496 | 93.7 | 0.74 | 2.0 | 679 | 244 | 102 | 3.5 | | |
| 450 3 | 315 | 653 | 496 | 93.8 | 0.74 | 2.2 | 794 | 235 | 102 | 3.5 | | |
| 450 4 | 355 | 738 | 496 | 94.0 | 0.74 | 2.2 | 912 | 230 | 102 | 3.5 | | |
| 450 5 | 400 | 819 | 496 | 94.2 | 0.75 | 2.1 | 953 | 248 | 102 | 3.5 | | |

# KΔ-series

## Dimension sheet

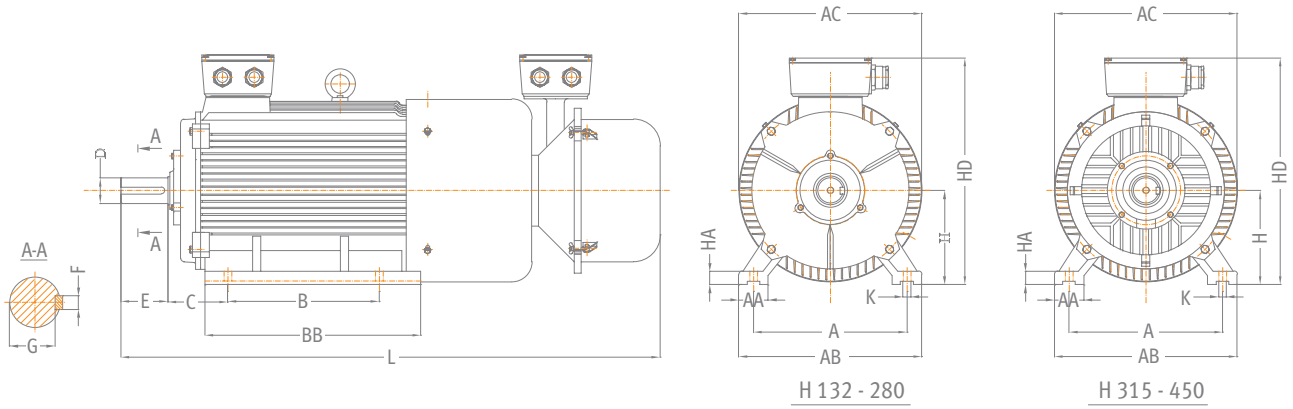


## MOUNTING B3

SIZE 132 - 450

| TYPE | A | B | C | D | E | F | G | H | K | AA | AB | AC | HD | HA | BB | L |
|---|---|---|---|---|---|---|---|---|---|---|---|---|---|---|---|---|
| KΔ 132M | 216 | 178 | 89 ± 2 | 38 | 80 | 10 | 33 | 132 | 12 | 55 | 280 | 275 | 360 | 18 | 224 | 745 |
| KΔ 160M | 254 | 210 | 108 ± 3 | 42 | 110 | 12 | 37 | 160 | 15 | 65 | 320 | 330 | 428 | 20 | 260 | 820 |
| KΔ 160L | | 254 | | | | | | | | | | | | | 304 | 865 |
| KΔ 180L | 279 | 279 | 121 ± 3 | 48 | 110 | 14 | 42.5 | 180 | 15 | 70 | 355 | 380 | 470 | 22 | 355 | 930 |
| KΔ 200L | 318 | 305 | 133 ± 3 | 55 | 110 | 16 | 49 | 200 | 19 | 70 | 395 | 420 | 530 | 25 | 375 | 1030 |
| KΔ 225M | 356 | 311 | 149 ± 4 | 60 | 140 | 18 | 53 | 225 | 19 | 75 | 435 | 470 | 585 | 28 | 400 | 1100 |
| KΔ 250M | 406 | 349 | 168 ± 4 | 65 | 140 | 18 | 58 | 250 | 24 | 80 | 490 | 510 | 640 | 30 | 450 | 1250 |
| KΔ280S | 457 | 368 | 190 ± 4 | 75 | 140 | 20 | 67.5 | 280 | 24 | 85 | 550 | 580 | 680 | 40 | 540 | 1300 |
| KΔ 280M | | 419 | | | | | | | | | | | | | | 1350 |
| KΔ 315S | 508 | 406 | 216 ± 4 | 80 | 170 | 22 | 71 | 315 | 28 | 120 | 635 | 645 | 845 | 45 | 680 | 1610 |
| KΔ 315M | | 457 | | | | | | | | | | | | | | 1720 |
| KΔ315L | | 508 | | | | | | | | | | | | | | 1785 |
| KΔ 355M | 610 | 560 | 254 ± 4 | 95 | 170 | 25 | 86 | 355 | 28 | 116 | 730 | 710 | 1010 | 52 | 750 | 1860 |
| KΔ 355L | | 630 | | | | | | | | | | | | | | |
| KΔ400M | 686 | 630 | 280 ± 4 | 110 | 210 | 28 | 100 | 400 | 35 | 120 | 806 | 856 | 1080 | 45 | 1090 | 2420 |
| KΔ400L | | 710 | | 120 | | 32 | 109 | | | | | | | | | |
| KΔ450 | 800 | 1000 | 280 ± 4 | 130 | 250 | 32 | 119 | 450 | 42 | 190 | 990 | 1016 | 1409 | 40 | 1300 | 2900 |

# KΔ-series

Dimension sheet

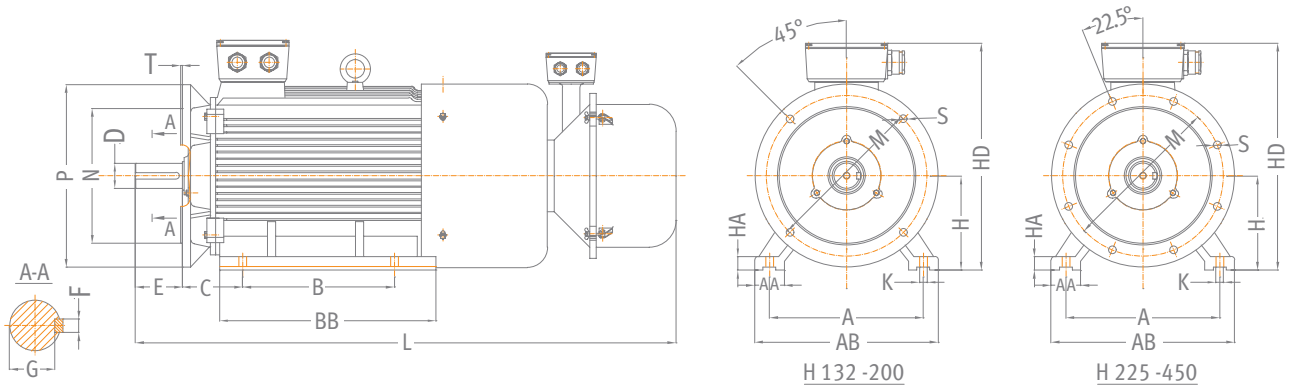


## MOUNTING B35

SIZE 132 - 450

| TYPE | A | B | C | D | E | F | G | H | K | M | N | P | S | T | AA | AB | AC | HD | HA | BB | L |
|---|---|---|---|---|---|---|---|---|---|---|---|---|---|---|---|---|---|---|---|---|---|
| KΔ 132M | 216 | 178 | 89 | 38 | 80 | 10 | 33 | 132 | 12 | 265 | 230 | 300 | 15 | 4 | 55 | 270 | 275 | 360 | 18 | 224 | 745 |
| KΔ 160M | 254 | 210 | 108 | 42 | 110 | 12 | 37 | 160 | 15 | 300 | 250 | 350 | 19 | 5 | 65 | 320 | 330 | 428 | 20 | 260 | 820 |
| KΔ 160L | | 254 | | | | | | | | | | | | | | | | | | 304 | 865 |
| KΔ 180L | 279 | 279 | 121 | 48 | 110 | 14 | 42.5 | 180 | 15 | 300 | 250 | 350 | 19 | 5 | 70 | 355 | 380 | 470 | 22 | 355 | 930 |
| KΔ 200L | 318 | 305 | 133 | 55 | 110 | 16 | 49 | 200 | 19 | 350 | 300 | 400 | 19 | 5 | 70 | 395 | 420 | 530 | 25 | 375 | 1030 |
| KΔ 225M | 356 | 311 | 149 | 60 | 140 | 18 | 53 | 225 | 19 | 400 | 350 | 450 | 19 | 5 | 75 | 435 | 470 | 585 | 28 | 400 | 1100 |
| KΔ 250M | 406 | 349 | 168 | 65 | 140 | 18 | 58 | 250 | 24 | 500 | 450 | 550 | 19 | 5 | 80 | 490 | 510 | 640 | 30 | 450 | 1250 |
| KΔ280S | 457 | 368 | 190 | 75 | 140 | 20 | 67.5 | 280 | 24 | 500 | 450 | 550 | 19 | 5 | 85 | 550 | 580 | 700 | 40 | 485 | 1300 |
| KΔ 280M | | 419 | | | | | | | | | | | | | | | | | | 536 | 1350 |
| KΔ 315S | 508 | 406 | 216 | 80 | 170 | 22 | 71 | 315 | 28 | 600 | 550 | 660 | 24 | 6 | 120 | 635 | 645 | 845 | 45 | 680 | 1610 |
| KΔ 315M | | 457 | | | | | | | | | | | | | | | | | | | 1720 |
| KΔ315L | | 508 | | | | | | | | | | | | | | | | | | | 1785 |
| KΔ 355M | 610 | 560 | 254 | 95 | 170 | 25 | 86 | 355 | 28 | 740 | 680 | 800 | 24 | 6 | 116 | 730 | 710 | 1010 | 52 | 750 | 1860 |
| KΔ 355L | | 630 | | | | | | | | | | | | | | | | | | | |
| KΔ 400M | 686 | 630 | 280 | 120 | 210 | 28 | 100 | 400 | 35 | 940 | 880 | 1000 | 28 | 6 | 120 | 806 | 856 | 1080 | 45 | 1090 | 2420 |
| KΔ 400L | | 710 | | | | 32 | 109 | | | | | | | | | | | | | | |
| KΔ 450 | 800 | 1000 | 280 | 130 | 250 | 32 | 119 | 450 | 42 | 1080 | 1000 | 1150 | 28 | 6 | 190 | 990 | 1060 | 1409 | 40 | 1300 | 2900 |

# KΔ-series

Dimension sheet

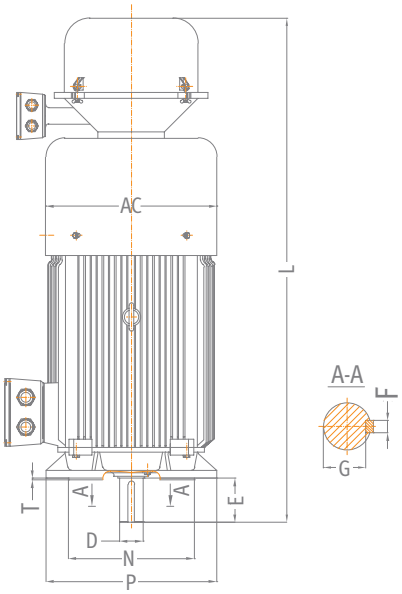


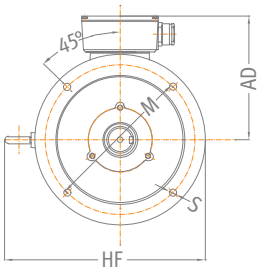


H 132 -160

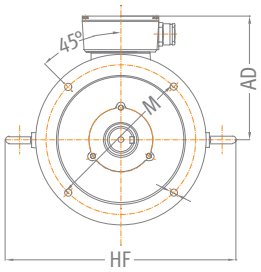


H 180 -200

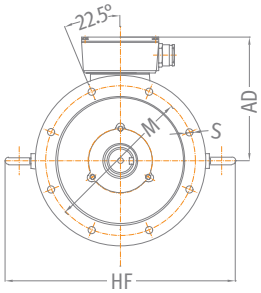


H 225 -450

## MOUNTING V1

SIZE 132 - 450

| TYPE | D | E | F | G | K | M | N | P | S | T | AC | AD | HF | L |
|---|---|---|---|---|---|---|---|---|---|---|---|---|---|---|
| KΔ 132M | 38 | 80 | 10 | 33 | 12 | 265 | 230 | 300 | 15 | 4 | 275 | 227 | 315 | 745 |
| KΔ 160M | 42 | 110 | 12 | 37 | 15 | 300 | 250 | 350 | 19 | 5 | 330 | 268 | 385 | 820 |
| KΔ 160L | | | | | | | | | | | | | | 865 |
| KΔ 180L | 48 | 110 | 14 | 42.5 | 15 | 300 | 250 | 350 | 19 | 5 | 380 | 290 | 430 | 930 |
| KΔ 200L | 55 | 110 | 16 | 49 | 19 | 350 | 300 | 400 | 19 | 5 | 420 | 330 | 550 | 1030 |
| KΔ 225M | 60 | 140 | 18 | 53 | 19 | 400 | 350 | 450 | 19 | 5 | 470 | 352 | 610 | 1100 |
| KΔ 250M | 65 | 140 | 18 | 58 | 24 | 500 | 450 | 550 | 19 | 5 | 510 | 388 | 650 | 1250 |
| KΔ280S | 75 | 140 | 20 | 67.5 | 24 | 500 | 450 | 550 | 19 | 5 | 580 | 410 | 720 | 1300 |
| KΔ 280M | | | | | | | | | | | | | | 1350 |
| KΔ 315S | 80 | 170 | 22 | 71 | 28 | 600 | 550 | 660 | 24 | 6 | 645 | 530 | 910 | 1610 |
| KΔ 315M | | | | | | | | | | | | | | 1720 |
| KΔ315L | | | | | | | | | | | | | | 1785 |
| KΔ 355M | 95 | 170 | 25 | 86 | 28 | 740 | 680 | 800 | 24 | 6 | 710 | 655 | 1010 | 1860 |
| KΔ 355L | | | | | | | | | | | | | | |
| KΔ 400M | 120 | 210 | 28 | 100 | 35 | 940 | 880 | 1000 | 28 | 6 | 856 | 680 | 1410 | 2420 |
| KΔ 400L | | | 32 | 109 | | | | | | | | | | |
| KΔ 450 | 130 | 250 | 32 | 119 | 42 | 1080 | 1000 | 1150 | 28 | 6 | 1060 | 959 | 1550 | 2900 |

# LS - Inverters

# LS - Inverters

LS Industrial Systems
New Name of LG Industrial Systems

VALIADIS HELLENIC MOTORS

# Starvert iC5

## Dynamic & Micro Single Phase Inverter

LS Industrial Systems
New Name of LG Industrial Systems

**0.4** ~ **2.2** kW, 1ϕ

- Volts / hertz & sensorless vector control (PWM by IGBT)
- Motor parameter auto-tuning
- 150% torque at 0.5Hz
- 0 ~ 400Hz output frequency
- 1 ~ 15kHz carrier frequency
- Built-in process PID control
- Ground fault protection
- Built-in RFI filter (class A)
- Built-in potentiometer
- Programmable I / O
- PNP / NPN selectable signal input
- 0 ~ 10Vdc Analog output
- Optional ModBus communication chip

## Specifications

| Model | | | SV004iC5-1 | SV008iC5-1 | SV015iC5-1 | SV022iC5-1 | SV004iC5-1F | SV008iC5-1F | SV015iC5-1F | SV022iC5-1F |
|---|---|---|---|---|---|---|---|---|---|---|
| Motor rating | | [HP] | 0.5 | 1 | 2 | 3 | 0.5 | 1 | 2 | 3 |
| | | [kW] | 0.4 | 0.75 | 1.5 | 2.2 | 0.4 | 0.75 | 1.5 | 2.2 |
| Output ratings | Capacity | [kVA] | 0.95 | 1.9 | 3 | 4.5 | 0.95 | 1.9 | 3 | 4.5 |
| | FLA | [A] | 2.5 | 5 | 8 | 12 | 2.5 | 5 | 8 | 12 |
| | Voltage | [V] | Three phase, 200~230V | | | | | | | |
| | Frequency | [Hz] | 0~400Hz | | | | | | | |
| Input ratings | Voltage | [V] | Single phase, 200~230V (±10%) | | | | | | | |
| | Frequency | [Hz] | 50~60Hz (±5%) | | | | | | | |

| | | |
|---|---|---|
| Control method | • Sensorless Vector • V/F | |
| Frequency setting resolution | • Digital reference: 0.01Hz • Analog reference: 0.06Hz at 60Hz | |
| Frequency setting accuracy | • Digital: 0.01% of Maximum output frequency • Analog: 0.1 % of Maximum output frequency | |
| V/F ratio | • Linear • Square • User V/F | |
| Overload capacity | • 1 minute at 150% • 30 seconds at 200% (with inverse characteristic proportional to time | |
| Torque boost | • Auto • Manual | |
| RFI filter | None | Built-in (Class A) |
| Multi-function input terminals | Total 5 inputs (programmable) | |
| Analog output | 0~10V Linear | |

| | | |
|---|---|---|
| Output signal | Operator control | • 3 digits LED keypad • Terminals • ModBus communication (option) |
| | Frequency setting | • Analog: 0~10V, 4~20mA • Digital: Keypad • Communication: ModBus • Potentiometer |
| | Start signal | • Forward • Reverse |
| | Multi-step operation | Setting up to 8 speeds (using multi-function terminal) |
| | Multi-step Accel./Decel. time | 0.1~6000 seconds. Maximum 8 pre-defined steps using multi-function terminals |
| | Operational functions | • PID control • Up-Down operation • 3-wire operation • Frequency limit • Frequency jump • Second motor function |
| | | • Slip compensation • Reverse rotation prevention • Auto restart |
| | Emergency stop | Interrupting output from inverter |
| | Jog | Jog operation |
| | Indicator | Reset fault signal when protective function is active |
| Output signal | Operational status | • Frequency detection • Overload alarm • Stall Overvoltage • Undervoltage • Inverter overheat • Run • Stop |
| | | • Constant speed • Speed search • Fault output (Relay output and Open collector output) |
| | Indicator | • Output frequency • Output current • Output voltage • DC bus voltage |

| | | |
|---|---|---|
| Protective functions | Trip | • Overvoltage • Undervoltage • Overcurrent • Inverter overheat • Motor overheat • I/O phase loss • I/O miss wiring |
| | | • Overload • External device fault 1 & 2 • Speed command loss • Hardware fault • Communication error • CPU error |
| | Alarm | • Stall • Overload |

# Starvert iG5A

## Powerful & Compact Sensorless Vector Control inverter

LS Industrial Systems
New Name of LG Industrial Systems

**0.4 ~ 22 kW**

- Extremely compact in its size
- Volts / hertz and sensorless vector control
- 150% torque in overall range
- Motor parameter auto-tuning at stop mode
- Changing carrier frequency as per Module temperature
- Ground fault detection during run
- Built-in process PID control
- Up / down & 3-wire operational function
- Built-in remote keypad
- 0 ~ 10Vdc, -10 ~ +10Vdc Analog Input
- PNP / NPN selectable signal input
- Selectable configured I / O
- Built-in ModBus (RS485) communication
- Built-in Braking IGBT
- Cooling fan On / Off control

## Specifications

| Type: SV □□□ iG5A-4 □□ | | 004 | 008 | 015 | 022 | 037 | 040 | 055 | 075 | 110 | 150 | 185 | 220 |
|---|---|---|---|---|---|---|---|---|---|---|---|---|---|
| Max. capacity | (HP) | 0.5 | 1 | 2 | 3 | 5 | 5.4 | 7.5 | 10 | 15 | 20 | 25 | 30 |
| | (kW) | 0.4 | 0.75 | 1.5 | 2.2 | 3.7 | 4.0 | 5.5 | 7.5 | 11 | 15 | 18.5 | 22 |
| Output rating | Capacity (kVA) | 0.95 | 1.9 | 3.0 | 4.5 | 6.1 | 6.5 | 9.1 | 12.2 | 18.3 | 22.9 | 29.7 | 34.3 |
| | FLA (A) | 1.25 | 2.5 | 4 | 6 | 8 | 9 | 12 | 16 | 24 | 30 | 39 | 45 |
| | Max frequency | 400 [Hz] | | | | | | | | | | | |
| | Max voltage | 3 phase 380~480 V | | | | | | | | | | | |
| Input rating | Rated voltage | 3 phase 380~480 VAC (+10%, -15%) | | | | | | | | | | | |
| | Rated frequency | 50~60 [Hz] (±5%) | | | | | | | | | | | |
| Cooling method | | N/C | Forced air cooling | | | | | | | | | | |
| Weight (kg) | | 0.76 | 0.77 | 1.12 | 1.84 | 1.89 | 1.89 | 3.66 | 3.66 | 9.0 | 9.0 | 13.3 | 13.3 |

| | |
|---|---|
| Control method | • V/F Control .Sensorless Vector Control |
| Frequency setting resolution | • Digital reference: 0.01Hz (below 99Hz) & 0.1Hz (100Hz and over) • Analog reference: 0.06Hz at 60Hz |
| Frequency setting accuracy | • Digital: 0.01% of Maximum output frequency • Analog: 0.1 % of Maximum output frequency |
| V/F ratio | • Linear • Square • User V/F |
| Overload capacity | • 1 minute at 150% • 30 seconds at 200% (with inverse characteristic proportional to time) |
| Torque boost | • Auto • Manual (0~15%) |
| Multi-function input terminals | Total 8 inputs (programmable) |
| Analog output | 0~10V linear |

| | | |
|---|---|---|
| Itput signal | Operator control | • 32 character LCD keypad • 4 digits LED keypad • Terminals • Modbus-RTU communication |
| | Frequency setting | • Optional ModBus-RTU, RS485, ProfiBus-DP, DeviceNet, F-Net |
| | Start signal | • Analog: 0~10V, 4~20mA, additional port for Sub-Board (0~10V) • Digital: Keypad • Communication Start signal • Forward • Reverse |
| | Multi-step operation | Setting up to 8 speeds (using multi-function terminal) |
| | Multi-step Accel./Decel. time | 0.1~6000 seconds. Maximum 8 pre-defined steps using multi-function terminals |
| | Operational functions | • DC braking • Frequency limit • Frequency jump • Second motor function • Slip compensation • Reverse rotation prevention |
| | | • Auto restart • Inverter by-pass • Auto-tuning • PID control |
| | Emergency stop | Interrupting output from inverter |
| | Auto operation | Operates from Internal Sequence by Setting Multi-Function Terminal (5 Way x 8 Step) |
| | Jog | Jog operation |
| | Fault reset | Reset fault signal when protective function is active |
| Output signal | Operational status | • Frequency detection • Overload alarm • Stall • Overvoltage • Undervoltage • Inverter overheat • Run • Stop • Constant speed |
| | | • Speed search • Fault output (Relay and Open collector output) • Inverter by-pass • Auto-operation step • Auto-operation sequence |
| | Indicator | • Output frequency • Output current • Output voltage • DC voltage • Output torque (output voltage: 0~10V) |

| | | |
|---|---|---|
| Protective functions | Trip | • Overvoltage • Undervoltage • Overcurrent • Inverter overheat • Motor overheat • I/O phase loss • I/O miss wiring |
| | | • Overload • Speed command loss • Hardware fault • Communication error |
| | Alarm | • Stall .Overload • Temperature sensor fault |



VALIADIS HELLENIC MOTORS

# iS7 Series

## High performance dual rated VFDs
## [3 phase 0.75~160kW]

LS Industrial Systems
New Name of LG Industrial Systems

- Constant torque / Variable torque dual rating
- Selectable V/f, V/f PG, sensorless vector, sensored vector
- 150 MIPS(million instructions per second) high speed DSP
- High performances & functions: Droop control (automatic torque balance), KEB (Kinetic Energy Buffering) protection|Ride Through (LV Trip Delay) protection, Under Load Trip protection||PMSM sensorless vector function, Power brake & Flux Brake function, Static motor parameter Auto-tuning*
- Easy to control: Easy Start Mode, User & Macro group, Multi Function Key
- 2nd motor sensorless control and parameter setting
- Available IP54 enclosure(0.75~22kW[1~30HP]) as built-in option*
- Built-in RS485(LS Bus / Modbus RTU) communication
- Built-in Dynamic braking transistor (0.75~22kW[1~30HP])
- Available EMC Filter & DC Reactor as built-in option: EMC Filter(0.75~22kW[1~30HP]) / DC Reactor(0.75~160kW[1~215HP])
- Wide graphic LCD keypad (6 different languages)
- PLC board (optional): Master-K platform: 14 max. inputs & 7 max. outputs
- Extension I/O boards (Optional): 11 max. inputs & 6 max outputs
- Communication boards (Optional): Profibus-DP, DeviceNet, Modbus TCP, Rnet, LonWorks, CANopen
- Monitoring & commissioning PC based software tool (Drive View)

## Specifications

### Rated Input and Output: Input voltage of 400V class (0.75~160kW)

| Type: SV□□□ iS7-4□ | | | 0008 | 0015 | 0022 | 0037 | 0055 | 0075 | 0110 | 0150 | 0185 | 0220 |
|---|---|---|---|---|---|---|---|---|---|---|---|---|
| Motor Applied* | | [HP] | 1 | 2 | 3 | 5 | 7.5 | 10 | 15 | 20 | 25 | 30 |
| | | [kW] | 0.75 | 1.5 | 2.2 | 3.7 | 5.5 | 7.5 | 11 | 15 | 18.5 | 22 |
| Rated Output | Rated Capacity [kVA]* | | 1.9 | 3.0 | 4.5 | 6.1 | 9.1 | 12.2 | 18.3 | 22.9 | 29.7 | 34.3 |
| | Rated Current [A]*3 | CT | 2.5 | 4 | 6 | 8 | 12 | 16 | 24 | 30 | 39 | 45 |
| | | VT | 4 | 6 | 8 | 12 | 16 | 24 | 30 | 39 | 45 | 61 |
| | Output Frequency [Hz] | | 0 ~ 400 [Hz]* | | | | | | | | | |
| | Output Voltage [V] | | 3-phase 380 ~ 480V* | | | | | | | | | |
| | Available Voltage [V] | | 3-phase 380 ~ 480 VAC (-15% ~ +10%) | | | | | | | | | |
| Rated Input | Frequency [Hz] | | 50 ~ 60 [Hz] (±5%) | | | | | | | | | |
| | Rated Current [A] | CT | 4.3 | 7.2 | 10.6 | 15.4 | 21 | 25.8 | 38.7 | 43.85 | 56.9 | 57.4 |
| | | VT | 3.5 | 5.3 | 7.3 | 10.8 | 13.8 | 22.5 | 26.1 | 33.2 | 40 | 52.2 |

| Type: SV□□□ iS7-4□ | | | 0300 | 0370 | 0450 | 0550 | 0750 | 0900 | 1100 | 1320 | 1600 | - |
|---|---|---|---|---|---|---|---|---|---|---|---|---|
| Motor Applied* | | [HP] | 40 | 50 | 60 | 75 | 100 | 120 | 150 | 180 | 225 | - |
| | | [kW] | 30 | 37 | 45 | 55 | 75 | 90 | 110 | 132 | 160 | - |
| Rated Output | Rated Capacity [kVA]* | | 46 | 57 | 69 | 84 | 116 | 139 | 170 | 201 | 248 | - |
| | Rated Current [A]* | CT | 61 | 75 | 91 | 110 | 152 | 183 | 223 | 264 | 325 | - |
| | | VT | 75 | 91 | 110 | 152 | 183 | 223 | 264 | 325 | 370 | - |
| | Output Frequency [Hz] | | 0 ~ 400 [Hz] (Sensorless-1: 0 ~ 300Hz, Sensorless-2, Vector: 0 ~ 120Hz)* | | | | | | | | | |
| | Output Voltage [V] | | 3-phase 380 ~ 480V* | | | | | | | | | |
| Rated Input] | Available Voltage [V] | | 3-phase 380 ~ 480 VAC (-15% ~ +10%) | | | | | | | | | |
| | Frequency [Hz] | | 50 ~ 60 [Hz] (±5%) | | | | | | | | | |
| | Rated Current [A] | CT | 57 | 69 | 83 | 113 | 154 | 195 | 239 | 286 | 362 | - |
| | | VT | 90 | 109 | 123 | 162 | 195 | 237 | 282 | 350 | 403 | - |

## Control

| | |
|---|---|
| Control Method | V/F control, V/F PG, slip compensation, sensorless vector control, vector control |
| Frequency Setting Resolution | Digital command: 0.01Hz<br>Analog command: 0.06Hz (maximum frequency: 60Hz) |
| Frequency Tolerance | Digital command operation: 0.01% of the maximum frequency<br>Analog command operation: 0.1% of the maximum frequency |
| V/F Pattern | Linear, double reduction, user V/F |
| Overload Capacity | CT current rating: 150% for 1 minute, 200% for 22 seconds, VT current rating: 110% for 1 minute |
| Torque Boost | Manual torque boost, automatic torque boost |

## Specifications

| | | | |
|---|---|---|---|
| Operating Method | | Selectable among keypad/terminal block/communication operation | |
| Frequency Setting | | Analog: 0 ~ 10[V], -10 ~ 10[V], 0 ~ 20[mA]<br>Digital: keypad | |
| Operating Function | | PID control, up-down operation, 3-wire operation, DC brake, frequency limit, frequency jump, second function, slip compensation, reverse rotation prevention, auto restart, inverter by-pass, auto tune flying start, energy buffering, power braking, flux braking, leakage current reduction, MMC, easy start | |
| Input | Multi-function terminal (8 points) P1 ~ P81 | NPN / PNP selectable | |
| | | Function: forward operation; reverse operation; reset; external trip; emergency stop; jog operation; sequential frequency-high; medium and low; multi-level acceleration and deceleration-high; medium and low; D.C. control during stop; selection of a second motor; frequency increase; frequency decrease; 3-wire operation; change to general operation during PID operation; main body operation during option operation; analog command frequency fixation; acceleration and deceleration stop selectable | |
| Output | Multi-function open collector terminal | Inverter fault output | Below DC 24V 50mA |
| | Multi-function relay terminal | | Below (N.O., N.C.) AC250V 1A,<br>Below DC 30V 1A |
| | Analog output | 0 ~ 10 Vdc (below 10mA): selectable from frequency, current, voltage, direct current voltage | |

## Protective Functions

| | |
|---|---|
| Trip | Over voltage, low voltage, over current, over current detection, inverter overheat, motor thermal protection, phase loss protection, overload protection, communication error, frequency command loss, hardware failure, cooling fan failure, pre-PID failure, no motor trip, external brake trip. etc |
| Alarm | Stall prevention, overload, diminished load, encoder error, fan failure, keypad command loss, speed command loss. |
| Instantaneous Interruption*2) | Below CT class 15 msec (VT class 8 msec): operation continues (within rated input voltage, rated output) Over CT class 15 msec (VT class 8 msec): automatic restart |

## Structure and Use Environment

| | |
|---|---|
| Cooling Method | Forced air blast cooling: 0.75 ~ 15kW (200/400V class), 22kW (400V class)<br>Inhalation cooling: 22kW (200V class), 30 ~ 160kW (400V class) |
| Protection Structure | Below 75kW: Open Type(IP21), UL Enclosed Type 1(Option)<br>Over 90kW: Open Type(IP20), UL Enclosed Type 1(Option) |
| Surrounding Temperature | CT (Heavy Duty) load: -10 ~ 50°C (14 ~ 122°F) with no ice or frost<br>VT (Normal Duty) load: -10~ 40°C (14 ~ 122°F) with no ice or frost<br>[It is recommended that you use less than 80% load when you use VT load at 50°C (122°F)] |
| Preservation Temperature | -20 ~ 65°C (-4 ~ 149°F) |
| Surrounding Humidity | Below 90% RH of relative humidity (with no dew formation) |
| Altitude, Vibration | Below 1,000m (3280 ft), below 5.9m/sec 2 (19.36 ft/sec 2, 0.6G) |
| Environment | There should be no corrosive gas, flammable gas, oil mist or dust. |

# iP5A Series [3 phase 5.5~450kW]

## Fan & Pump specialized VFDs

LS Industrial Systems
New Name of LG Industrial Systems

- Specialized functions for Fan & Pump: Advanced PID control (Pre-PID, Dual PID), Multi Motor Control function, Up to 4 motors: 55.~90kW[7.5~125HP])
- Energy saving & High efficiency: Sleep & Wake-up function, Flying Starting function, Automatic energy saving function, Flux Braking Algorithm
- Improved protection functions: Pre-heater function, Low Leakage PWM, Safety stop function, Automatic carrier frequency change
- Selectable V/f, Sensorless vector control
- Long-life condenser & Simple framework
- Easy Start function
- Selectable PNP/NPN input signal
- Plug-in type control terminals
- Cooling fan On/Off control
- Built-in RS485(LS Bus) communication
- Communication boards (Optional): Modbus RTU, DeviceNet, Profibus-DP, LonWorks, BACnet, Modbus TCP*
- Monitoring & commissioning PC based software tool (Drive View)

### 200~230V Class (5.5~30kW / 7.5~40HP)

| Model Number (SV□□□ iP5A-2) | | | | 055 | 075 | 110 | 150 | 185 | 220 | 300 |
|---|---|---|---|---|---|---|---|---|---|---|
| Capacity [kVA]* | | | | 9.1 | 12.2 | 17.5 | 22.9 | 28.2 | 33.5 | 43.8 |
| Output ratings | Fan or pump load | Motor rating* | (HP) | 7.5 | 10 | 15 | 20 | 25 | 30 | 40 |
| | | | (kW) | 5.5 | 7.5 | 11 | 15 | 18.5 | 22 | 30 |
| | | Current [A] | | 24 | 32 | 46 | 60 | 74 | 88 | 115 |
| | | (110% over current) | | 110% 1 Minute (Normal Duty) | | | | | | |
| | General load | Motor rating | (HP) | 5.5 | 7.5 | 10 | 15 | 20 | 25 | 30 |
| | | | (kW) | 3.7 | 5.5 | 7.5 | 11 | 15 | 18.5 | 22 |
| | | Current [A] | | 17 | 23 | 33 | 44 | 54 | 68 | 84 |
| | | (150% over current) | | 150% 1 Minute (Heavy Duty) | | | | | | |
| | Frequency | | | 0.01~120 Hz | | | | | | |
| | Voltage | | | 200~230V* | | | | | | |
| Input ratings | Voltage | | | 3∅200~230V (-15%~+10%) | | | | | | |
| | Frequency | | | 50/60 Hz (± 5%) | | | | | | |
| Protection degree | | | | IP20 / UL Type1 | | | IP00 / UL Open* | | | |
| Weight [kg (lbs.)] | | | | 4.9 (10.8) | 6 (13.2) | 6 (13.2) | 13 (28.7) | 13.5 (29.8) | 20 (44.1) | 20 (44,1) |

# iP5A Series [3 phase 5.5~450kW]

Fan & Pump specialized VFDs

LS Industrial Systems
New Name of LG Industrial Systems

## 380~480V Class (5.5~90kW / 7.5~125HP)

| Model Number (SV□□□ iP5A-4) | | | | 055 | 075 | 110 | 150 | 185 | 220 | 300 | 370 | 450 | 550 | 750 | 900 |
|---|---|---|---|---|---|---|---|---|---|---|---|---|---|---|---|
| Capacity [kVA]*1 | | | | 9.6 | 12.7 | 19.1 | 23.9 | 31.1 | 35.9 | 48.6 | 59.8 | 72.5 | 87.6 | 121.1 | 145.8 |
| Output ratings | Fan or pump load | Motor rating*2 | (HP) | 7.5 | 10 | 15 | 20 | 25 | 30 | 40 | 50 | 60 | 75 | 100 | 125 |
| | | | (kW) | 5.5 | 7.5 | 11 | 15 | 18.5 | 22 | 30 | 37 | 45 | 55 | 75 | 90 |
| | | Current [A] | | 12 | 16 | 24 | 30 | 39 | 45 | 61 | 75 | 91 | 110 | 152 | 183 |
| | | (110% over current) | | 110% 1 Minute (Normal Duty) | | | | | | | | | | | |
| | General load | Motor rating | (HP) | 5.5 | 7.5 | 10 | 15 | 20 | 25 | 30 | 40 | 50 | 60 | 75 | 100 |
| | | | (kW) | 3.7 | 5.5 | 7.5 | 11 | 15 | 18.5 | 22 | 30 | 37 | 45 | 55 | 75 |
| | | Current [A] | | 8.8 | 12 | 16 | 22/24 | 28/30 | 34/39 | 44/45 | - | - | - | - | - |
| | | (150% over current) | | 150% 1 Minute (Heavy Duty) | | | | | | | | | | | |
| | Frequency | | | 0.01~120 Hz | | | | | | | | | | | |
| | Voltage | | | 380~480V*3 | | | | | | | | | | | |
| Input ratings | Voltage | | | 3∅380~480V (-15%~+10%) | | | | | | | | | | | |
| | Frequency | | | 50/60 Hz (± 5%) | | | | | | | | | | | |
| Protection degree | | | | IP20 / UL Type1 | | | IP00 / UL Open | | | | | | | | |
| Weight [kg (lbs.)] | Standard Type | | | 4.9 (10.8) | 6 (13.2) | 6 (13.2) | 12.5 (27.6) | 13 (28.7) | 20 (44.1) | 20 (44.1) | 27 (59.5) | 27 (59.5) | 29 (64) | 42 (92.6) | 43 (94.8) |
| | Built-in DCL Type | | | - | - | - | 19.5 (43.9) | 19.5 (42.9) | 26.5 (58.3) | 26.5 (58.3) | 39 (86) | 40 (88.2) | 42 (92.6) | 67 (147.4) | 68 (149.9) |

## 380~480V Class (110~450kW / 150~600HP)

| Model Number (SV□□□ iP5A-4) | | | | 1100 | 1320 | 1600 | 2200 | 2800 | 3150 | 3750 | 4500 |
|---|---|---|---|---|---|---|---|---|---|---|---|
| Capacity [kVA]*1 | | | | 178 | 210 | 259 | 344 | 436 | 488 | 582 | 699 |
| Output ratings | Fan or pump load | Motor rating*2 | (HP) | 150 | 200 | 250 | 300 | 350 | 400 | 500 | 600 |
| | | | (kW) | 110 | 132 | 160 | 220 | 280 | 315 | 375 | 450 |
| | | Current [A] | | 223 | 264 | 325 | 432 | 547 | 613 | 731 | 877 |
| | | (110% over current) | | 110% 1 Minute (Normal Duty) | | | | | | | |
| | General load | Motor rating | (HP) | 125 | 150 | 200 | 250 | 300 | 350 | 400 | 500 |
| | | | (kW) | 90 | 10 | 132 | 160 | 220 | 280 | 315 | 375 |
| | | Current [A] | | 183 | 223 | 264 | 325 | 432 | 547 | 613 | 731 |
| | | (150% over current) | | 150% 1 Minute (Heavy Duty) | | | | | | | |
| | Frequency | | | 0.01~120 Hz | | | | | | | |
| | Voltage | | | 380~480V*3 | | | | | | | |
| Input ratings | Voltage | | | 3∅380~480V (-15%~+10%) | | | | | | | |
| | Frequency | | | 50/60 Hz (± 5%) | | | | | | | |
| Protection degree | | | | IP00 / UL Open*4 | | | | | | | |
| DCL | | | | Built-in | | | | External Option | | | |
| Weight [kg (lbs.)] | | | | 101 (222.7) | 101 (222.7) | 114 (251.3) | 200 (441.9) | 200 (441.9) | 243 (535.7) | 380 (837.7) | 380 (837.7) |

*1 Rated capacity (v 3XVXI) is based on 220V for 200V class and 460V for 400V class.
*2 Indicates the maximum applicable capacity when using a 4-Pole LS motor.
*3 Maximum output voltage will not exceed the input voltage. An output voltage less than the input voltage may be programmed if necessary.
*4 IP20/UL Type1 with optional conduit, it can be modified to UL Type1.



VALIADIS HELLENIC MOTORS

# LSMV Series [3 phase 250~4.150kW]

## Perfect Energy Saving MV Drive

LS Industrial Systems
New Name of LG Industrial Systems

- Multi-level Pulse Width Modulation method More sinusoidal output wave form, no output filter required. Low input current THD, satisfies IEEE Standard
- Compact Size MV VFD has designed an optimum inner panel through heat analysis; it promotes to get the most out of space.
- Energy Saving & High Efficiency MV VFD realizes high efficiency and high power factor more than 95% without any compensation tools. MV VFD realizes perfect energy saving VFD system without input/output filter.
- Redundant Cell Power Factor Control MV VFD has no extra charge for low power factor. MV VFD's voltage regulation is advanced. MV VFD keeps High pwer factor with standard induction motor in all of the speed range. (More than 95%)
- Built-in Cell Bypass In case of cell failure during operation, the fault cell is bypassed and the neutral point is shifted 83% of the rated voltage can be output after the failure of one cell. This function can be operated by automation and manual setting. MV VFD's drag torque is constantly maintained when cell is bypassed

## Standard Specifications

| 3,000V | Model Number [50Hz] | LSMV-030F200 | LSMV-030F300 | LSMV-030F400 | LSMV-030F500 | LSMV-030F600 | LSMV-030F750 | LSMV-030F10H | LSMV-030F12H | LSMV-030F15H | LSMV-030F20H | LSMV-030F25H | LSMV-030F30H | LSMV-030F37H |
|---|---|---|---|---|---|---|---|---|---|---|---|---|---|---|
| Output Capacity [kVA] | | 200 | 300 | 400 | 500 | 600 | 750 | 1000 | 1200 | 1500 | 2000 | 2500 | 3000 | 3700 |
| Cell Rated Current [A] | | 35 | 53 | 70 | 88 | 105 | 131 | 175 | 218 | 260 | 350 | 438 | 525 | 657 |
| Max. Applicable Motor Capacity [kW] | | 160 | 250 | 330 | 410 | 500 | 620 | 850 | 1000 | 1250 | 1700 | 2080 | 2500 | 3150 |
| Model Number | | LSMV-041F250 | LSMV-041F380 | LSMV-041F500 | LSMV-041F630 | LSMV-041F750 | LSMV-041F950 | LSMV-041F12H | LSMV-041F15H | LSMV-041F19H | LSMV-041F25H | LSMV-041F31H | LSMV-041F37H | LSMV-041F47H |
| Output Capacity [kVA] | | 250 | 380 | 500 | 630 | 750 | 950 | 1200 | 1500 | 1900 | 2500 | 3100 | 3700 | 4700 |
| Cell Rated Current [A] | | 35 | 53 | 70 | 88 | 105 | 131 | 175 | 218 | 260 | 350 | 438 | 525 | 657 |
| Max. Applicable Motor Capacity [kW] | | 200 | 310 | 410 | 530 | 620 | 790 | 1000 | 1250 | 1580 | 2080 | 2650 | 3150 | 4000 |
| 6,000V | Model Number [50Hz] | LSMV-060F400 | LSMV-060F600 | LSMV-060F800 | LSMV-060F10H | LSMV-060F12H | LSMV-060F15H | LSMV-060F20H | LSMV-060F25H | LSMV-060F30H | LSMV-060F40H | LSMV-060F50H | LSMV-060F60H | LSMV-060F75H |
| Output Capacity [kVA] | | 400 | 600 | 800 | 1000 | 1200 | 1500 | 2000 | 2500 | 3000 | 4000 | 5000 | 6000 | 7500 |
| Cell Rated Current [A] | | 35 | 53 | 70 | 88 | 105 | 131 | 175 | 218 | 260 | 350 | 438 | 525 | 657 |
| Max. Applicable Motor Capacity [kW] | | 330 | 500 | 660 | 850 | 1000 | 1250 | 1700 | 2080 | 2500 | 3400 | 4100 | 5000 | 6200 |
| Model Number | | LSMV-100F600 | LSMV-100F900 | LSMV-100F12H | LSMV-100F15H | LSMV-100F18H | LSMV-100F22H | LSMV-100F30H | LSMV-100F37H | LSMV-100F45H | LSMV-100F60H | LSMV-100F75H | LSMV-100F90H | LSMV-100F11M |
| Output Capacity [kVA] | | 600 | 900 | 1200 | 1500 | 1800 | 2200 | 3000 | 3700 | 4500 | 6000 | 7500 | 9000 | 11000 |
| Cell Rated Current [A] | | 35 | 53 | 70 | 88 | 105 | 132 | 175 | 218 | 260 | 350 | 438 | 525 | 657 |
| Max. Applicable Motor Capacity [kW] | | 500 | 700 | 1000 | 1250 | 1500 | 1800 | 2500 | 3150 | 3800 | 5000 | 6200 | 7200 | 9300 |

# LSMV Series [3 phase 250~4.150kW]

## Perfect Energy Saving MV Drive

LS Industrial Systems
New Name of LG Industrial Systems

| | | |
|---|---|---|
| Power Factor | | Approx. 95% (rated speed and load condition) |
| Efficiency | | Approx. 98.5%*1 (rated speed and load condition) |
| Input current THD | | Satisfies IEEE Standard |
| Input | Main circuit | 3-phase 3 kV/3.3 kV/4.16 kV/6 kV/6.6 kV/10 kV ±10%, 50/60 Hz |
| | Control circuit | 3-phase 220 V/380 V/440 V ±10%, 50/60 Hz ±5% |
| Output | Rated voltage | 3-phase 3 kV/3.3 kV/4.16 kV/6 kV/6.6 kV/10 kV Max. 25 level |
| | Output frequency | 0 - 120 Hz |
| Control | Control method | V/F, sensorless vector control |
| | Frequency control precision | ±0.1% |
| | Frequency resolution | 0.01 Hz |
| | Accel/Decel time | 6000 s |
| | Overload tolerance | 120% 60 s |
| | Method of modulation | Multi-level pulse width modulation (multi-level PWM) |
| | Extra features | Flying start / Cell bypass |
| Operation | Keypad loader | RS-232, Modbus-RTU, key input mode |
| | System monitoring | HMI (XP-50) basic installation |
| | MV System View (Option) | Built-in touch screen input-type wide-view angle 12.1-inch 144-color TFT-KEYPAD, 1024x768 resolution and 40 ms response speed. |
| Signal Input/ Output | Digital PLC | Input: 15 channels, output: 9 channels XBC-DR64H input: 32 channels, output: 32 channels |
| | Analog | Input: 3-channel (DC 0 - 10 V or 4 - 20 mA) output: 4-channel (DC 0 - 10 V or 4 - 20 mA) |
| Protective function | | Overcurrent, overvoltage, insufficient voltage, ground fault, drive overheat, motor overheat fan trip, overload, communications error, cell trip... . |
| Communication | | RS-485 built-in, option: DeviceNet, Profibus, Modbus-RTU, Modbus/TCP, Ethernet/IP |
| Structure | Protection level | IP20 |
| | Cell bypass | Default built-in (manual/auto bypass) |
| | Cooling method | Air-cooled |
| Installation environment | Ambient temperature | 0~40°C |
| | Humidity | Max. 85% (should not have condensation) |
| | Altitude | Below 1,000 m |
| | Installation | Indoor |
| Input transformer | | Class H, air-cooling, N/+5%/10% or -5%/N/+5 |

*1 without transformer

## Model Number

**LSMV** – □ □ □ □ □ □ □ – □ □

LS Industrial Systems Medium Voltage VFD

**Product Type**
G1 : 1st Generation

*G : General Type
R : Regeneration Type

| Input Voltage |
|---|
| 030 : 3000[V] |
| 033 : 3300[V] |
| 041 : 4160[V] |
| 060 : 6000[V] |
| 066 : 6600[V] |
| 100 : 10000[V] |

| Input Frequency |
|---|
| F : 50[Hz] |
| S : 60[Hz] |

| Total Capacity | | |
|---|---|---|
| 200 : 200 kVA | 15H : 1500 kVA | 55H : 5500kVA |
| 250 : 250 kVA | 18H : 1750 kVA | 60H : 6000kVA |
| 300 : 300 kVA | 20H : 2000 kVA | 70H : 7000kVA |
| 400 : 400 kVA | 25H : 2500 kVA | 75H : 7500kVA |
| 500 : 500 kVA | 30H : 3000 kVA | 80H : 8000kVA |
| 600 : 600 kVA | 35H : 3500 kVA | 90H : 9000kVA |
| 700 : 700 kVA | 40H : 4000kVA | 95H : 9500kVA |
| 800 : 800 kVA | 45H : 4500kVA | 10M : 10000kVA |
| 10H : 1000 kVA | 50H : 5000kVA | 11M : 11000kVA |
| 13H : 1250 kVA | | |

| Class | MV VFD Capacity (kVA) | | | | | | | | | | | | |
|---|---|---|---|---|---|---|---|---|---|---|---|---|---|
| 3kV | 200 | 300 | 400 | 500 | 600 | 750 | 1000 | 1200 | 1500 | 2000 | 2500 | 3000 | 3700 |
| 6kV | 250 | 380 | 500 | 630 | 750 | 950 | 1200 | 1500 | 1900 | 2500 | 3100 | 3700 | 4700 |
| 10kV | 400 | 600 | 800 | 1000 | 1200 | 1500 | 2000 | 2500 | 3000 | 4000 | 5000 | 6000 | 7500 |
| 4kV | 600 | 900 | 1200 | 1500 | 1800 | 2200 | 3000 | 3700 | 4500 | 6000 | 7500 | 9000 | 11000 |

* As for the specific information, please contact LS Industrial Systems Co,. Ltd.



VALIADIS HELLENIC MOTORS

# AuCom - Soft Starters

# AuCom - Soft Starters

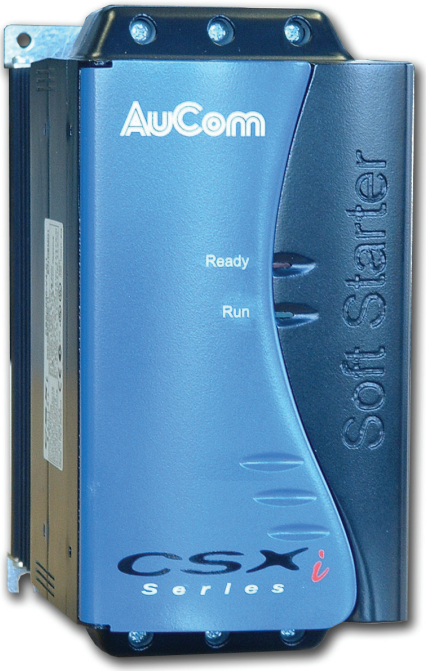

# CSXi

## Compact Soft Starters

AuCom's new CSX Series includes two ranges. Users can choose between a simple soft start control device and an advanced soft start system complete with motor protection. This choice allows selection of a soft start product best suited to an individual application.

**The CSX range** is a TVR system that provides soft start and soft stop functionality in a very compact frame.

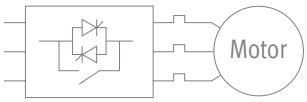


**The CSXi range** is a Constant Current system with current measurement and control. It provides a range of motor protection functions in addition to soft start and soft stop.

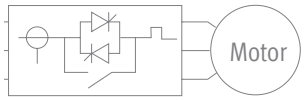


| | |
|---|---|
| Power Range | 7.5kW~110kW @ 400V |
| Supply Voltage | 3 x 200~440 VAC or<br>3 x 200~575 VAC |
| Supply Frequency | 45Hz~66Hz |
| Control Voltage | 110~240VAC, 380~440 VAC or<br>24 VAC / VDC |

CSX □ - □□□ - □□ - □□

**Control Supply Voltage**
C1 = 110-240 VAC & 380-440 VAC
C2 = 24 VAC / VDC

**Supply Voltage**
V4 = 200 VAC ~ 440 VAC
V6 = 200 VAC ~ 575 VAC

**Nominal kW Rating**
(@ 400V AC53b 4-6:354) for 007-030
(@ 400V AC53b 4-6:594) for 037-110

**Motor Protection**
Blank = Without motor protection
i = With motor protection(Overload, Phase Loss, Excess Start Time, Phase Rotation, Motor Thermistor)

- Compact design, small footprint
- Simple set-up and installation
- Built-in bypass contactor
- Excellent start ratings and duty
- IP20 up to 55kW
- DIN rail mounting up to 30kW
- CE, UL, C-UL, C ✓approvals

### FEATURE SET

| | CSX | CSXi |
|---|---|---|
| **Starting** | | |
| TVR (Timed voltage ramp) | ✓ | |
| Constant Current | | ✓ |
| Current Ramp | | ✓ |
| Stopping | | |
| Soft Stop | ✓ | ✓ |
| **Protection** | | |
| Motor Overload | | ✓ |
| Phase Imbalance | | ✓ |
| Phase Sequence | | ✓ |
| Excess Start Time | | ✓ |
| Motor Thermistor | | ✓ |
| Supply Fault | ✓ | ✓ |
| Shorted SCR | ✓ | ✓ |
| **LED Indication** | | |
| Ready/Tripped | ✓ | ✓ |
| Running/Starting-Stopping | ✓ | ✓ |
| Fault Code | ✓ | ✓ |
| **Relay Outputs** | | |
| Main Contactor | ✓ | ✓ |
| Run | | ✓ |
| Tripped | | ✓ |
| **Options & Accessories** | | |
| Remote Operator | ✓ | ✓ |
| 4-20mA Output | | ✓ |
| PC Software | ✓ | ✓ |
| AS-i | ✓ | ✓ |
| Modbus RTU | ✓ | ✓ |
| Profibus | ✓ | ✓ |
| DeviceNet | ✓ | ✓ |

| Model | kW | Height mm | Width mm | Depth mm |
|---|---|---|---|---|
| 007<br>015<br>018<br>022<br>030 | 7<br>15<br>18<br>22<br>30 | 203 | 98 | 163 |
| 037<br>045<br>055 | 37<br>45<br>55 | 215 | 145 | 191 |
| 075<br>090<br>110 | 75<br>90<br>110 | 240 | 202 | 212 |

# EMX3 Series [3 phase 7.5~1.500kW]

High performance soft starters

- Constant & ramp current, kickstart and XLR-8 adaptive acceleration starting functions
- Standard soft Stop and XLR-8 adaptive deceleration stopping functions
- Motor and starter advanced protection functions
- 3 & 6 wire connection possibility with auto detection function
- Built-in bypass contactor (up to 220Amp)
- Advanced wide LCD graphic digital operator
- 24VDC auxiliary power supply
- Motor thermistor (PTC) and Pt100 (RTD) inputs
- 4 - 20mA output
- Real time clock with battery backup
- Forward and reverse jog function
- Plug-in control terminal blocks
- CE, UL, C-UL, Ctick approvals

## Current Ratings (in-line connection)

| Model | Light | Medium | Heavy | Severe |
|---|---|---|---|---|
| | AC53b 3.0-10:350 | AC53b 3.5-15:345 | AC53b 4.0-20:340 | AC53b 4.5-30:330 |
| EMX 3-0023B | 23 A | 20 A | 17 A | 15 A |
| EMX 3-0043B | 43 A | 40 A | 34 A | 29 A |
| EMX 3-0050B | 50 A | 44 A | 37 A | 30 A |
| EMX 3-0053B | 53 A | 53 A | 46 A | 37 A |
| | AC53b 3.0-10:590 | AC53b 3.5-15:585 | AC53b 4.0-20:580 | AC53b 4.5-30:570 |
| EMX 3-0076B | 76 A | 64 A | 55 A | 47 A |
| EMX 3-0097B | 97 A | 82 A | 69 A | 58 A |
| EMX 3-0100B | 100 A | 88 A | 74 A | 61 A |
| EMX 3-0105B | 105 A | 105 A | 95 A | 78 A |
| EMX 3-0145B | 145 A | 123 A | 106 A | 90 A |
| EMX 3-0170B | 170 A | 145 A | 121 A | 97 A |
| EMX 3-0200B | 200 A | 189 A | 160 A | 134 A |
| EMX 3-0220B | 220 A | 210 A | 178 A | 148 A |
| | AC53a 3.0-10:50-6 | AC53a 3.5-15:50-6 | AC53a 4.0-20:50-6 | AC53a 4.5-30:50-6 |
| EMX 3-0255C | 255 A | 222 A | 195 A | 171 A |
| EMX 3-0360C | 360 A | 351 A | 303 A | 259 A |
| EMX 3-0380C | 380 A | 380 A | 348 A | 292 A |
| EMX 3-0430C | 430 A | 413 A | 355 A | 301 A |
| EMX 3-0620C | 620 A | 614 A | 515 A | 419 A |
| EMX 3-0650C | 650 A | 629 A | 532 A | 437 A |
| EMX 3-0790C | 790 A | 790 A | 694 A | 567 A |
| EMX 3-0930C | 930 A | 930 A | 800 A | 644 A |
| EMX 3-1200C | 1200 A | 1200 A | 1135 A | 983 A |
| EMX 3-1410C | 1410 A | 1355 A | 1187 A | 1023 A |
| EMX 3-1600C | 1600 A | 1600 A | 1433 A | 1227 A |

All ratings are at 40 °C and <1000 metres. To calculate inside-delta ratings, multiply by 1.5

# EMX3 Series [3 phase 7.5~1.500kW]

High performance soft starters

## Specifications

### General

Current Range ..... 23 A ~ 1600 A (nominal)
Motor connection ..... In-line or inside delta
Bypass .....Integrated internal or external

### Supply

Mains Voltage (L1, L2, L3)
  EMX3-xxxx-V4 ..... 200 VAC ~ 440 VAC (± 10%)
  EMX3-xxxx-V7 ..... 380 VAC ~ 690 VAC (± 10%) (in-line connection)
  EMX3-xxxx-V7 .. 380 VAC ~ 600 VAC (± 10%) (inside delta connection)
Control Voltage (A1, A2, A3) ..... 110 ~ 220 VAC (+ 10% / -15%)
  .....or 230 ~ 440 VAC (+ 10% / -15%)
Mains Frequency ..... 45 Hz to 66 Hz

### Inputs

Inputs ..... Active 24 VDC, 8 mA approx.
Start (C23, C24) ..... Normally open
Stop (C31, C32) ..... Normally closed
Reset (C41, C42) ..... Normally open or closed
Programmable Inputs
  Input A (C53, C54) ..... Normally open or closed
  Input B (C63, C64) ..... Normally open or closed
Motor Thermistor (B4, B5)
PT100 RTD (B6, B7, B8)

### Outputs

Relay outputs ..... 10 A at 250 VAC resistive
  ..... 5 A at 250 VAC, AC15 pf 0.3
Run Relay (23, 24) ..... Normally Open
Programmable Outputs
  Relay A (13, 14) ..... Normally Open
  Relay B (31, 32, 34) ..... Changeover
  Relay C (41, 42, 44) ..... Changeover
Analog Output (B10, B11) ..... 0-20 mA or 4-20 mA
24 VDC Output (P24, COM) ..... 200 mA

### Environmental

Protection
  EMX3-0023B ~ EMX3-0105B ..... IP20 & NEMA1
  EMX3-0145B ~ EMX3-1600C ..... IP00
Operating temperature ..... -10 °C ~ 60 °C
Storage temperature ..... - 10 °C ~ 60 °C
Humidity ..... 5% to 95% Relative Humidity

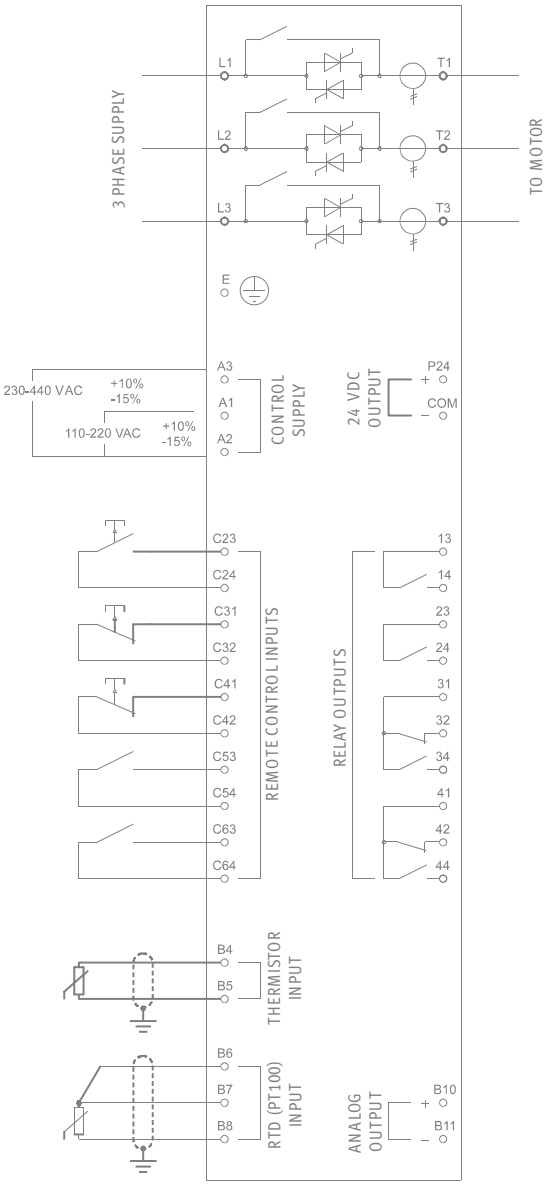


The internal bypass feature is included only on units with the suffix 'B'

# EMX3 Series [3 phase 7.5~1.500kW]

High performance soft starters

## Dimensions and weights

| Model | A | B | C | D | E | Weight |
|---|---|---|---|---|---|---|
| | mm (inches) | mm (inches) | mm (inches) | mm (inches) | mm (inches) | kg (lbs) |
| EMX3-0023B | 156.4 (6.16) | 124.0 (4.88) | 294.6 (11.60) | 278.0 (10.94) | 192.2 (7.57) | 3.2 (7.05) |
| EMX3-0043B | | | | | | |
| EMX3-0050B | | | | | | |
| EMX3-0053B | | | | | | |
| EMX3-0076B | | | | | 222.7 (8.77) | 3.5 (7.22) |
| EMX3-0097B | | | | | | 4.8 (10.58) |
| EMX3-0100B | | | | | | |
| EMX3-0105B | | | | | | |
| EMX3-0145B | 282 (11.10) | 250 (9.84) | 438 (17.24) | 380 (14.96) | 250 (9.84) | 16 (35.27) |
| EMX3-0170B | | | | | | |
| EMX3-0200B | | | | | | |
| EMX3-0220B | | | | | | |
| EMX3-0255C | 390 (15.35) | 320 (12.60) | 417 (16.42) | 400 (15.75) | 281 (11.06) | 25 (55.12) |
| EMX3-0360C | 430 (16.93) | 320 (12.60) | 545 (21.46) | 522 (20.55) | 299 (11.77) | 50.5 (111.33) |
| EMX3-0380C | | | | | | |
| EMX3-0430C | | | | | | |
| EMX3-0620C | | | | | | |
| EMX3-0930C | | | | | | |
| EMX3-1200C | 574 (22.60) | 500 (19.69) | 750 (29.53) | 727 (28.62) | 361 (14.21) | 136 (299.83) |
| EMX3-1410C | | | | | | |
| EMX3-1600C | | | | | | |

For EMX 3-0145B ~ EMX 3-1600C, dimensions A & C are the unit footprint.Bus bars are not included as this dimension will vary with bus bar configuration.

## Compact Design

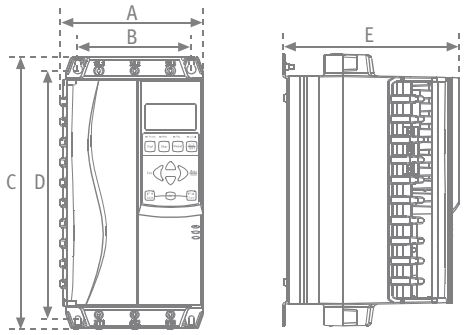


The design of the EMX3 allows for multiple units to be mounted side by side, or in a bank of starters due to the flexibility in cabling options. Internally bypassed starters further reduce the overall size of your soft starter.

AuCom ratings are detailed using the AC53 utilisation code specified by IEC60947-4-2.

**78 A: AC-53a 3.5-15 : 50-10**

- **Starts per hour**
- **On-load duty cycle** (%)
- **Start time**
- **Start current** (multiple of FLC)
- **Start current rating** (Amps)

# MVS Series [3 phase 250~8.000kW]

## Medium voltage pre-engineered soft starters

- Constant & ramp current, kickstart and XLR-8 adaptive acceleration starting functions
- Standard soft Stop and XLR-8 adaptive deceleration stopping functions
- Motor and starter advanced protection functions
- Advanced LCD digital operator
- Fibre optic link
- User-programmable metering screen
- Multi-level password protection
- Event log (99 positions, time stamped)
- Trip Log (8 positions, date/time stamped)
- Synchronous motor control (optional)
- Communication capabilities : PC, Modbus RTU, Profibus, DeviceNet (optional)
- Wide voltage range (2.3~13.8kV)
- IP32 and IP54 turnkey panel type solution (other IP rating available on request)
- CE, UL, C-UL, Ctick approvals

### 3.1 Current Ratings

(At 1000 m.)

Two starts per hour

| | 3.5-15 : 1785 | | 4.0-20 : 1780 | | 4.0-30 : 1770 | | 5.0-30 : 1770 | | 5.0-60 : 1740 | |
|---|---|---|---|---|---|---|---|---|---|---|
| | 40 °C | 50 °C | 40 °C | 50 °C | 40 °C | 50 °C | 40 °C | 50 °C | 40 °C | 50 °C |
| MVS0080 | 96 | 91 | 80 | 74 | 72 | 66 | 59 | 55 | 46 | 42 |
| MVS0159 | 19 | 177 | 159 | 147 | 143 | 132 | 117 | 109 | 91 | 84 |
| MVS0230 | 282 | 261 | 230 | 213 | 201 | 185 | 165 | 152 | 121 | 111 |
| MVS0321 | 393 | 363 | 321 | 296 | 279 | 257 | 229 | 211 | 168 | 154 |

Three starts per hour

| | 4.0-20 : 1180 | | 4.0-30 : 1170 | | 5.0-30 : 1170 | | 5.0-60 : 1140 | |
|---|---|---|---|---|---|---|---|---|
| | 40 °C | 50 °C | 40 °C | 50 °C | 40 °C | 50 °C | 40 °C | 50 °C |
| MVS0080 | 73 | 68 | 65 | 60 | 53 | 49 | 40 | 37 |
| MVS0159 | 146 | 135 | 129 | 119 | 106 | 98 | 79 | 73 |
| MVS0230 | 207 | 190 | 175 | 162 | 144 | 132 | 101 | 93 |
| MVS0321 | 288 | 265 | 244 | 225 | 200 | 184 | 141 | 129 |

Four starts per hour

| | 4.0-20 : 880 | | 4.0-30 : 870 | | 5.0-30 : 870 | | 5.0-60 : 840 | |
|---|---|---|---|---|---|---|---|---|
| | 40 °C | 50 °C | 40 °C | 50 °C | 40 °C | 50 °C | 40 °C | 50 °C |
| MVS0080 | 68 | 63 | 59 | 54 | 48 | 45 | 35 | 33 |
| MVS0159 | 136 | 125 | 117 | 108 | 96 | 89 | 70 | 65 |
| MVS0230 | 188 | 173 | 157 | 144 | 129 | 118 | 88 | 81 |
| MVS0321 | 262 | 241 | 218 | 200 | 179 | 164 | 122 | 112 |

# MVS Series [3 phase 250~8.000kW]

Medium voltage pre-engineered soft starters

## Specifications

### General

Current Range ..... 80 A ~ 390 A (nominal)*
Motor connection ..... In-line

### Supply

Mains Voltage (L1, L2, L3)
- MVSxxxx-V02 ..... 3 x 2300 VAC (± 10%)
- MVSxxxx-V03 ..... 3 x 3300 VAC (± 10%)
- MVSxxxx-V04 ..... 3 x 4160 VAC (± 10%)
- MVSxxxx-V06 ..... 3 x 6600 VAC (± 10%)
- MVSxxxx-V07 ..... 3 x 7200 VAC (± 10%)
- MVSxxxx-V11 ..... 3 x 11000 VAC (± 10%)
- MVSxxxx-V13 ..... 3 x 13800 VAC (± 10%)

Control Voltage (A1, A2, A3) 110 VAC to 130 VAC (+10% /-15%)
..... or 220 VAC to 240 VAC (+10% /-15%)
Mains Frequency .....45 Hz to 66 Hz

### Inputs

Inputs .....Active 24 VDC, 8 mA approx.
- Start (C23, C24) .....24 VDC, 8mA approx.
- Stop (C31, C32) .....24 VDC, 8mA approx.
- Reset (C41, C42) .....24 VDC, 8mA approx.
- Input A (C53, C54).....24 VDC, 8mA approx.
- Input B (C63, C64) .....24 VDC, 8mA approx.

Motor Thermistor (B4, B5)

### Outputs

Relay outputs ..... 10 A at 250 VAC/360 VA
..... 10 A at 30 VAC resistive
Main Contactor (Terminals 13, 14)..... Normally Open
Bypass Contactor (Terminals 23, 24)..... Normally Open
Run Output/ PFC (Terminals 33, 34)..... Normally Open
Output Relay A (Terminals 43, 44) ..... Normally Open
Output Relay B (Terminals 51, 52, 54) .....Changeover
Output Relay C (Terminals 61, 62, 64).....Changeover
Analog Output (Terminals B10, B11) ..... 0-20 mA or 4-20 mA

### Environmental

Protection
- Power Assembly..... IP00
- Controller..... IP54/ NEMA 12
- Operating Temperature ..... -10°C to +60°C
- Storage Temperature..... -25°C to +55°C

Conformal coating of PCBs .....Standard

* Ratings higher than 390A available on request.

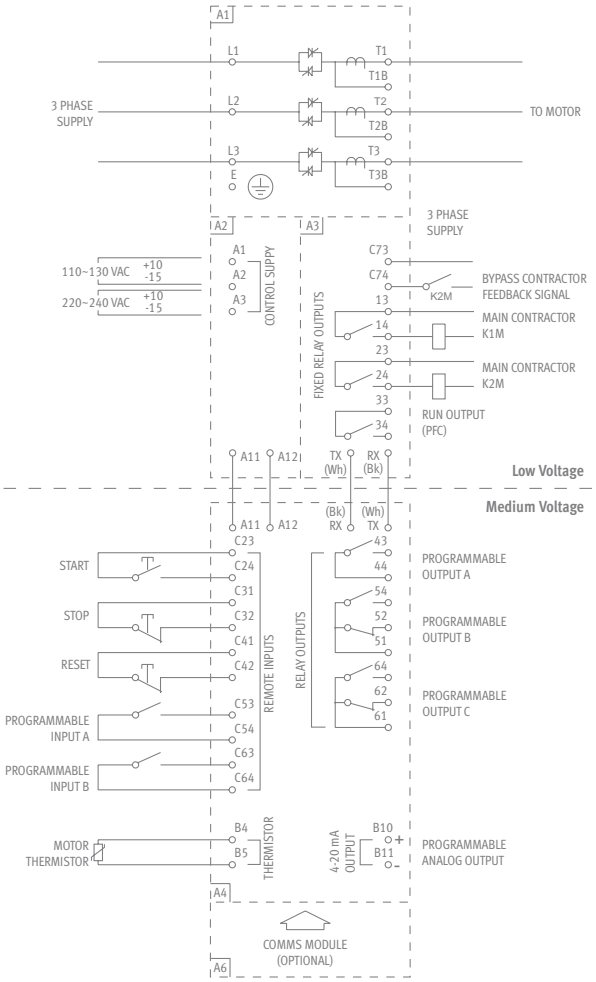


| ITEM | DESCRIPTION |
|---|---|
| A1 | POWER ASSEMBLY |
| A2 | CONTROL VOLTAGE TERMINAL BLOCK |
| A3 | POWER INTERFACE PCB |
| A4 | CONTROLLER |
| A6 | COMMS MODULE (OPTIONAL) |
| K1M | MAIN CONTACTOR |
| K2M | BYPASS CONTACTOR |

# MVS Series [3 phase 250~8.000kW]

Medium voltage pre-engineered soft starters

## Enclosures

MVS enclosures are engineered to suit your project specific requirements. For other options, please contact your local sales engineer for more information.
Some examples of enclosure options include:

- Powerfactor correction
- Additional motor protection relays
- Transition panels with cables or direct bus bar connections
- Multi-motor operation
- Top of bottom entry cabling
- Various control options and RTD relays.

| Enclosure* | A mm (inches) | B mm (inches) | C mm (inches) | D mm (inches) | E mm (inches) | F mm (inches) | G mm (inches) |
|---|---|---|---|---|---|---|---|
| MVS 3.3/4.2 | 2078 (81.81) | 1953 (62.72) | 766 (30.16) | 825 (32.48) | 1023 (40.28) | 958 (37.72) | 1029 (40.51) |
| MVS 6.6/7.2 | 2271 (89.41) | 2141 (84.29) | 1017 (40.04) | 1017 (40.04) | 1215 (47.83) | 1150 (45.28) | 1221 (48.07) |
| MVS 11/13 | Ask your sales engineer for details | | | | | | |

* Measurements shown are typical dimensions and may vary for specific projects.

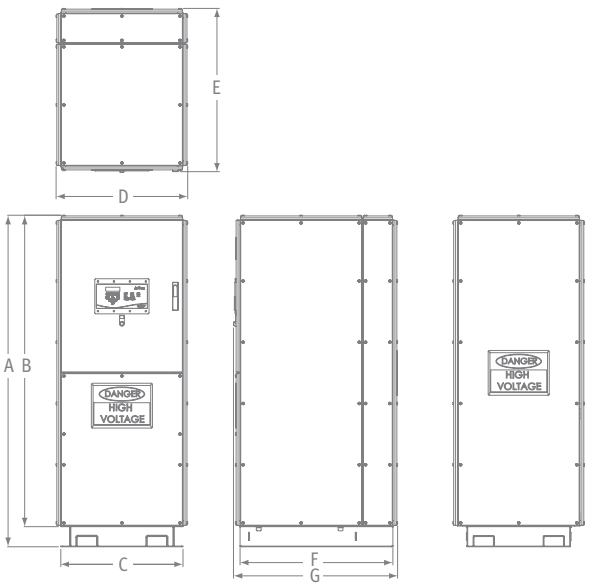


MVS 3.3/4.2

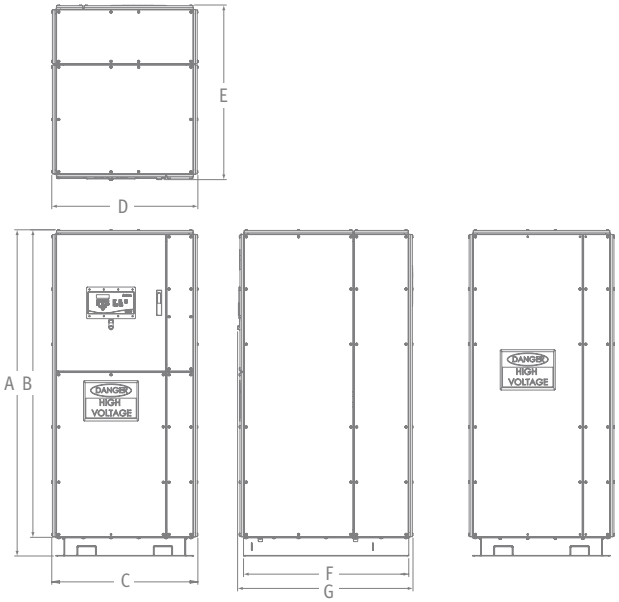


MVS 6.6/7.2

VALIADIS
HELLENIC MOTORS

ATHENS: 18, Gr. Labraki Str., 141 23 Likovrisi Tel: +30 2102817217, Fax : +30 2102814277
THESSALONIKI: Industrial Area of Sindos., O.T. 48B, 15th Str., 570 22
Tel :+30 2310796646, Fax: +30 2310796645
e-mail: valiadis@valiadis.gr – https://www.valiadis.gr
ROMANIA: 1, Aleea Meseriasilor, Bloc C93, Etaj 2, Ap. 16, Sector 6, 061647-Bucharest
Tel : +40 214135902, Fax: +40 318156441, +40 318165216
e-mail: romania@valiadis.gr -https://www.ac-motors.eu