VALIADIS
HELLENIC MOTORS

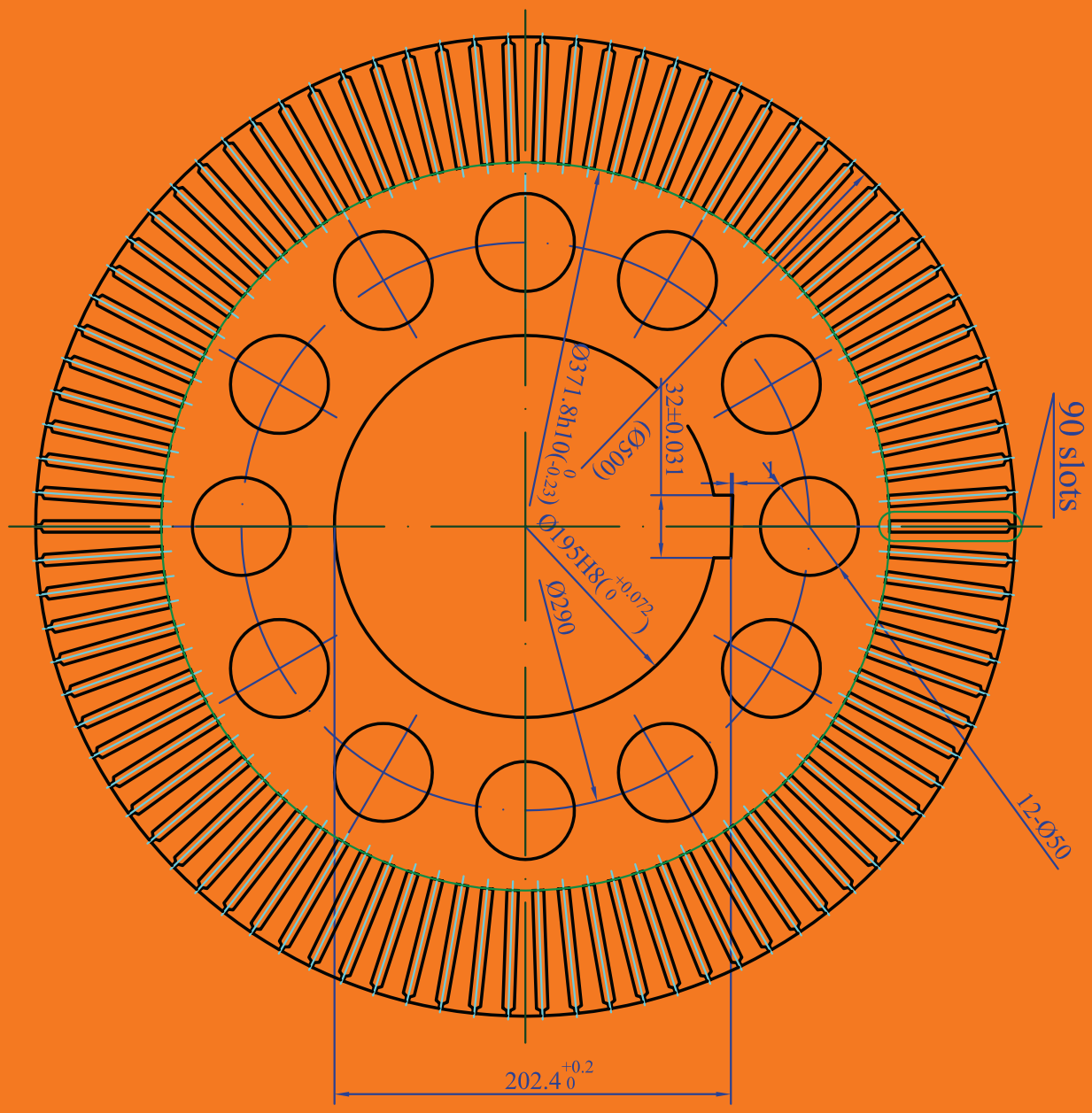

Customised Motors

Contents

a/a		Page
1	TMKHV630-6 B3 2000KW,6.6KV…….....	3
2	TMKHV450-4 B3 770KW , 6.6KV……	9
3	AB500-6 B3 SLIP RING…….	15
4	TMKHV400-6 B3 WITH SPECIAL SHAFT ø130mm AND BASE TO MEET 467 mm……	18
5	KHV355-4 B3 250KW 6KV……...	21
6	KHV400-4 B3 450KW 6KV……..	33
7	KHV450-4 B3 630KW 6KV……..	45
8	KHV560-4 B3 1250KW 6KV…….	57
9	KD450-6 B3 310KW 380V……..	70
10	KHV450-12 V1 400KW 3300V……..	76
11	KHV500-12 V1 500KW 3300V……..	80

MOTOR TYPE : TMKHV630-6
MOUNTING : B3
2000KW / 6.6KV

VALIADIS S.A. HELLENIC MOTORS	
Data Sheet	
Three phase Induction Motor	
Customer	
Client reference	
Type:	TMKHV630-6 2000KW 6,6KV 50 Hz
Brand:	VALIADIS

Identification			
Frame:	630 mm	Insulation Class :	F
Output	2000 KW	Temperature Rise :	80K
Frequency	50Hz	Service Factor :	1
Poles:	6p	Duty :	S1
Rated Speed :	990 rpm	Ambient Temperature :	-20~40 oC
Slip:	0,011	Altitude:	1000 m
Rated Voltage :	6,6 KV	Protection Degree :	IP55
Connection:	Y	Cooling :	IC611
Rated Current:	212,6 A	Mounting :	IMB3
Rotor Voltage:	-	Vibration : mm/s	2,8
Connection:	-	Approx.Weight : Kg	10500
Rotor Current:	-	Moment of Inertia : Kg-m2	
Locked Rotor Current :	650%	Noise Level (Lp) : dB(A)	95
No Load Current :	-	Direction of Rotation :	BOTH
Rated Torque :	19292,9 Nm	Starting Method :	DIRECT ON LINE
Locked Rotor Torque :	80%	Coupling :	DIRECT
Breakdown Torque:	180%	Load Type :	PARABOLIC CURVE

Performance			
Output	50%	75%	100%
Efficiency(%)	92,8	95,7	95,7
Power Factor	0,73	0,82	0,86

Bearing Information		
	DE	NDE
Bearing :	NU238 ECM	6338C3
Regreasing int, (h)	4000	4000
Grease amount (g)	110	140
Grease-PolyrexEM	Caltex SRI-2	Caltex SRI-2

Notes / Accessories
With winding RTD: PT 100 6PCS
With bearing RTD: PT 100 2PCS
With space Heater 230V

Standards	
Specification	IEC60034-1
Test	IEC60034-2
Noise	IEC60034-9
Vibration	IEC60034-14

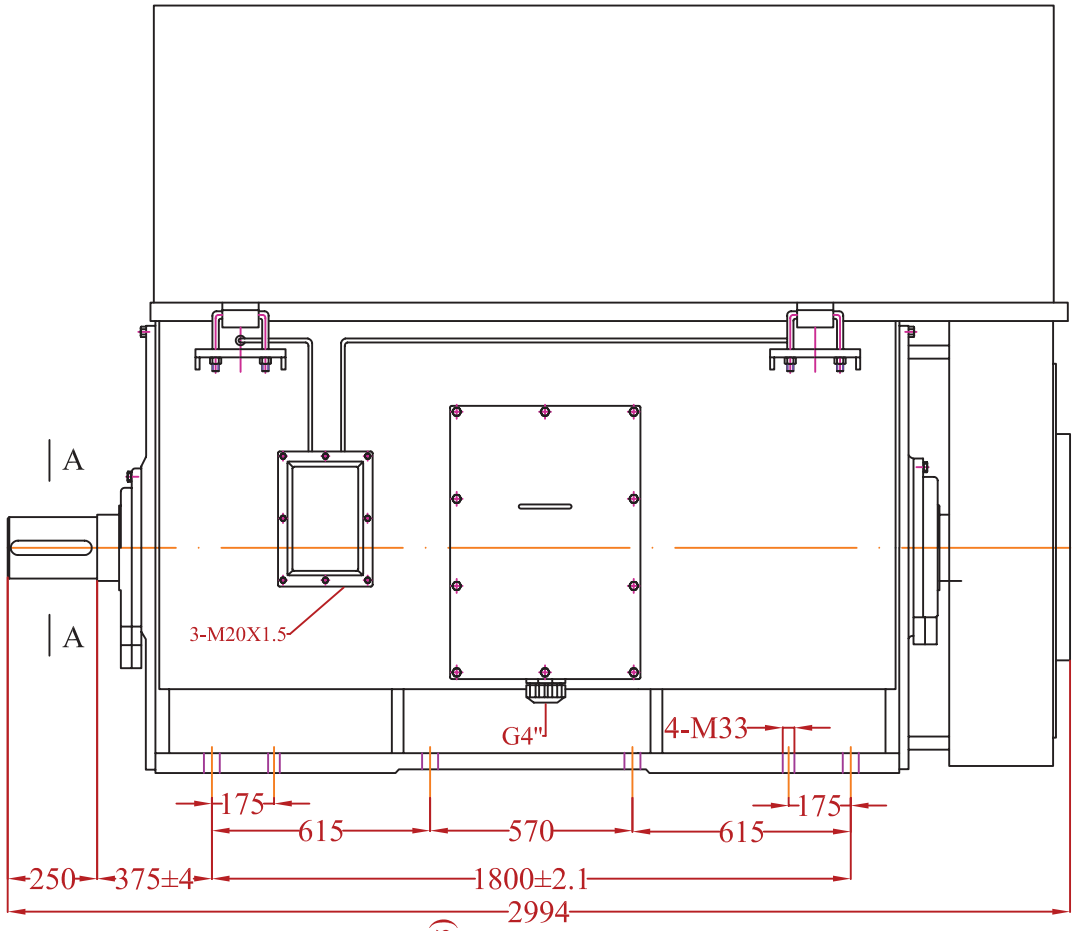

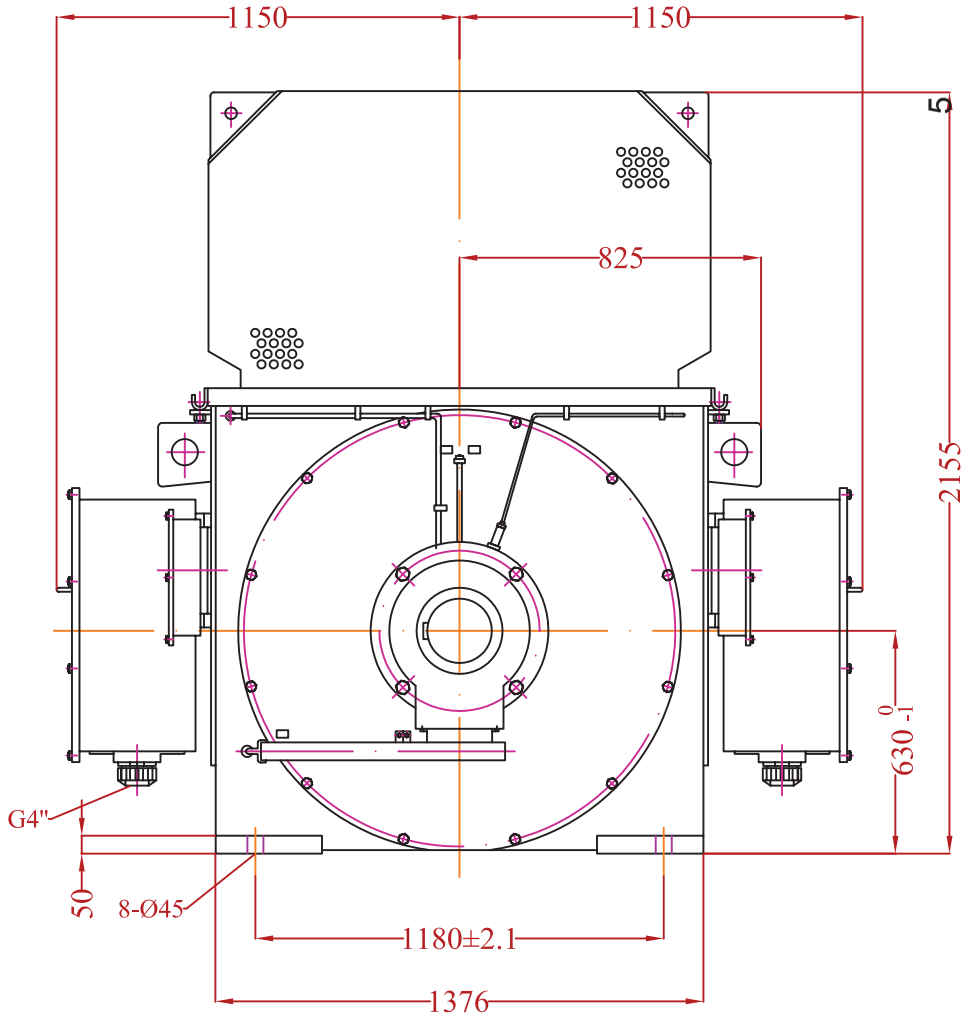

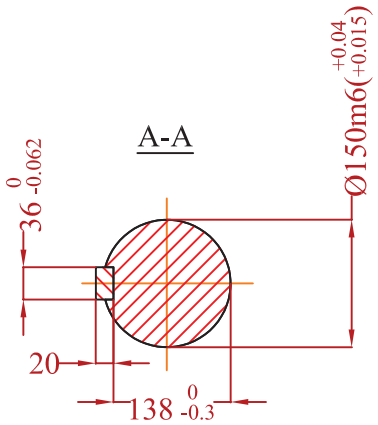

Change	Date	Name

	Date	Signature
Designed by	07/02/14	St.Karageorgis
Checked by		
Examine by		

VALIADIS
HELLENIC MOTORS

SCALE

Motor Type : TMKHV630-6
Mounting : B3

Design Number :
MTTMKHV-140207-3

Replaced from

Replace the

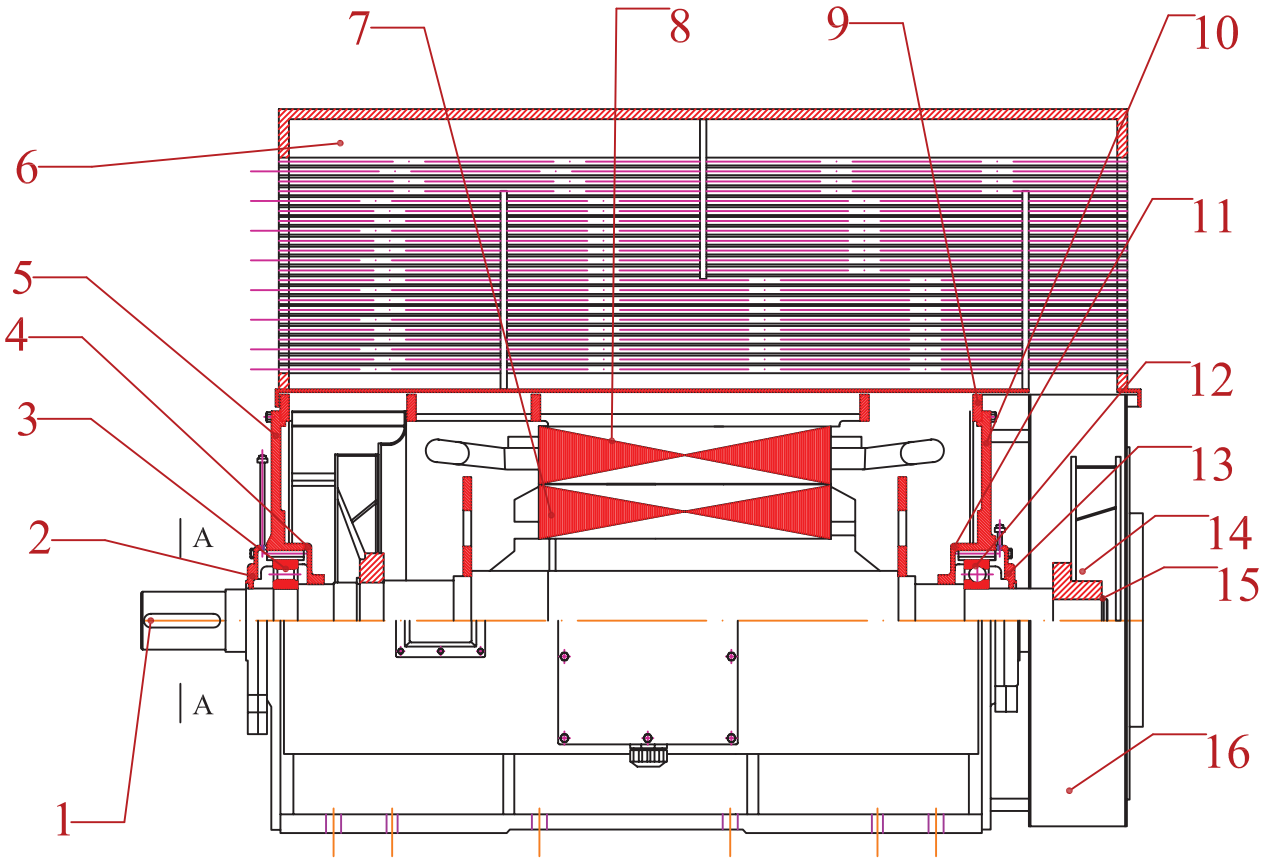

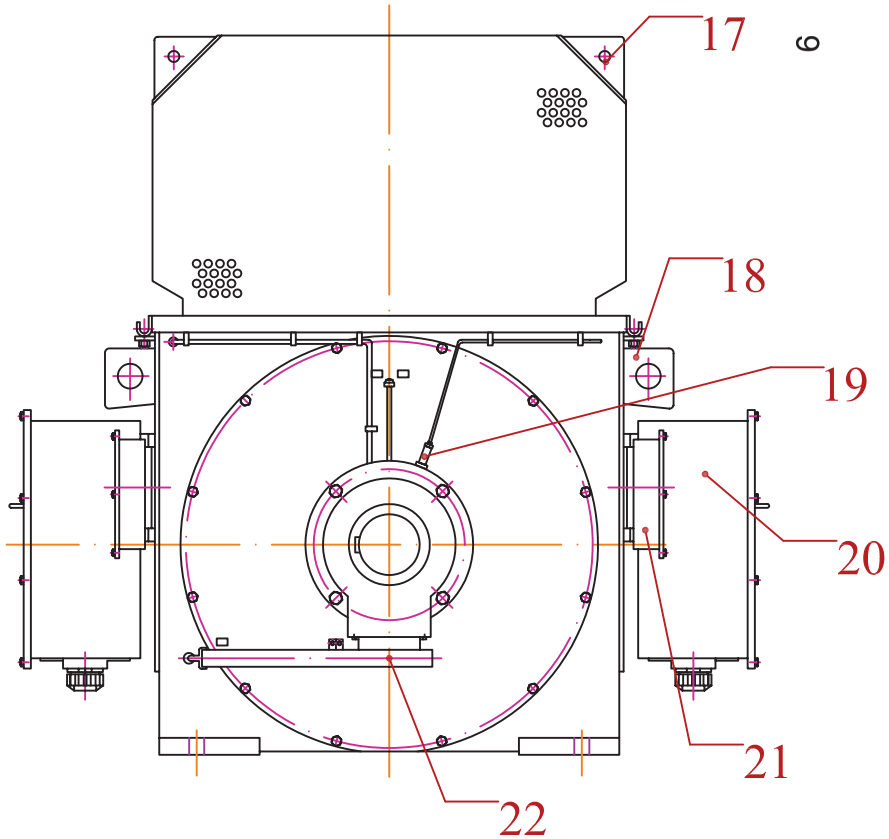

a/a	Name	pcs	
22	Grease slinger of Driving End Bearing	2	
21	Terminal box for auxiliary circuit	1	
20	Stator Terminal Box (U-V-W)	1	
19	Vibrator Sensor	2	
18	Lifting Lugs	4	
17	Lifting Lugs for Heat Exchanger	4	
16	Fan Cover	1	
15	Fan Circlip	1	
14	External Cooling Fan	1	
13	Outside cover of Non Driving End Bearing	1	
12	Non Driving End Bearing	1	6338C3
11	Inside cover of Non Driving End Bearing	1	
10	Endshield Non Driving End	1	
9	Frame	1	
8	Stator	1	
7	Rotor	1	
6	Air to Air Heat Exchanger	1	
5	Endshield Driving End	1	
4	Inside cover of Driving End Bearing	1	
3	Driving End Bearing	1	NU238ECM
2	Outside cover of Driving End Bearing	1	
1	Driving Shaft	1	

	Date	Signature
Designed by	07/02/14	St.Karageorgis
Checked by		
Examine by		

Change | Date | Name

SCALE

Motor Type : TMKHV630-6
Mounting : B3

VALIADIS
HELLENIC MOTORS

Design Number :
MTTMKHV-140207-3-2

Replaced from

Replace the

9

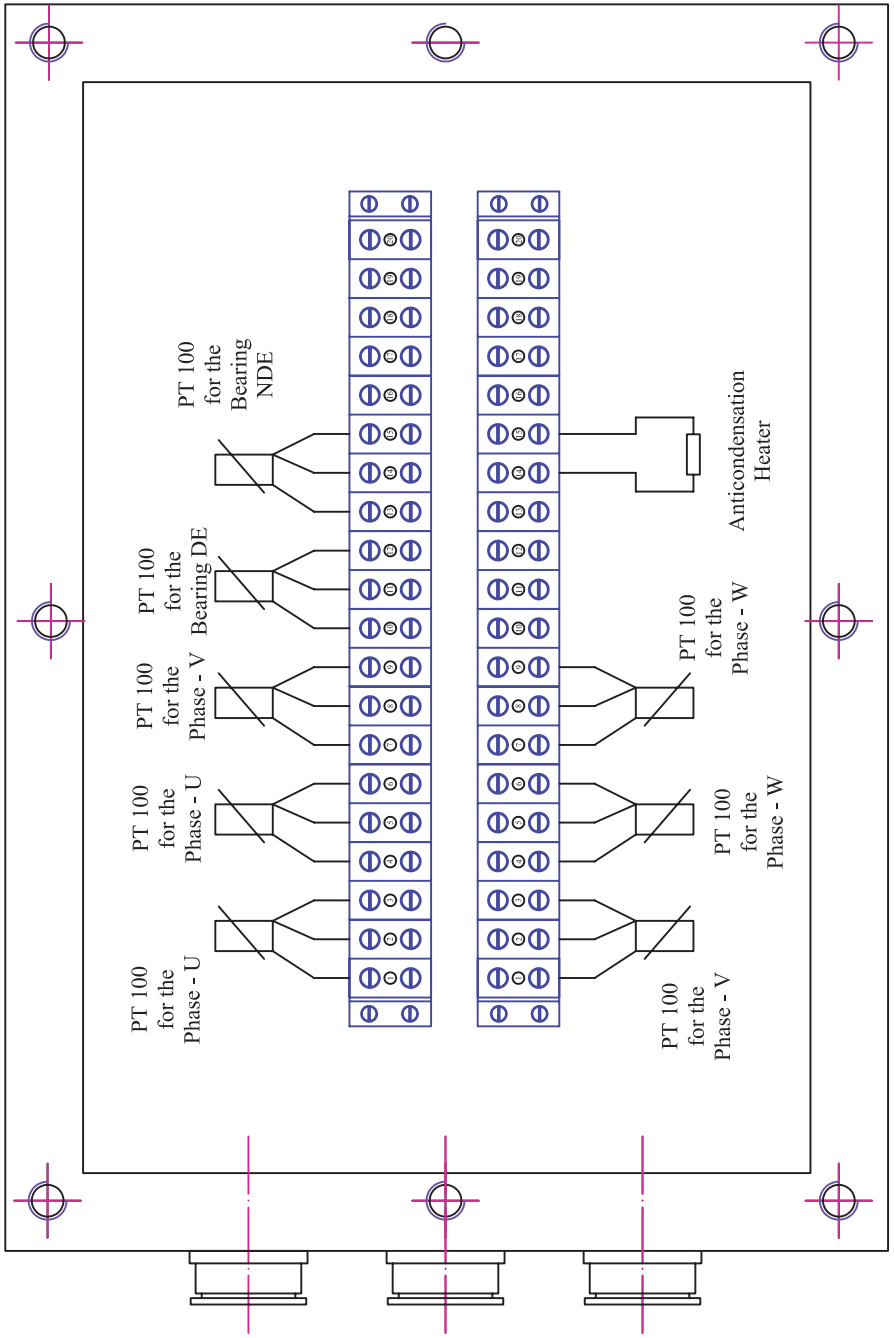

				Date	Signature
			Designed by	07/02/14	St.Karageorgis
			Checked by		
			Examine by		
Change	Date	Name	SCALE		

VALIADIS
HELLENIC MOTORS

Terminal box for auxiliary circuit
Motor Type : TMKHV630-6
Mounting : B3

Design Number :
MTTMKHV-140207-3-3

Replaced from

Replace the

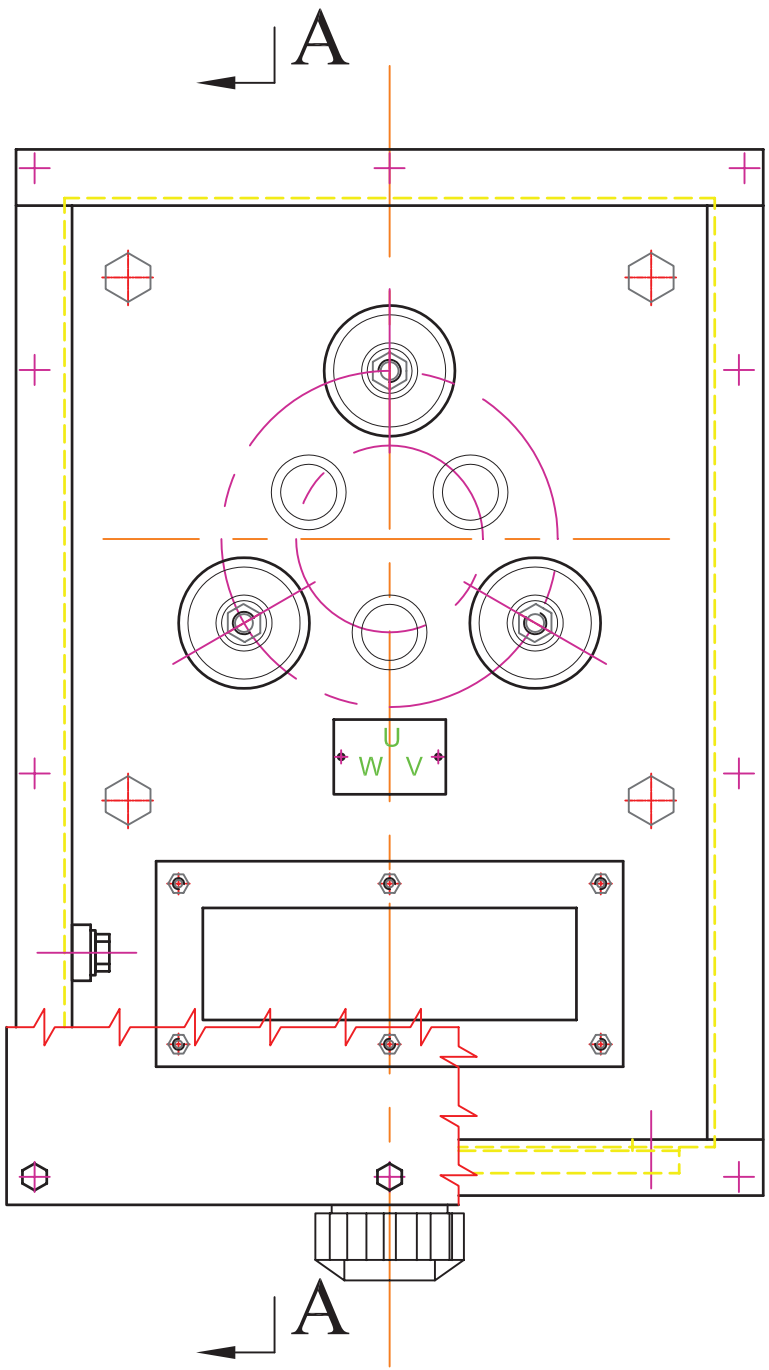

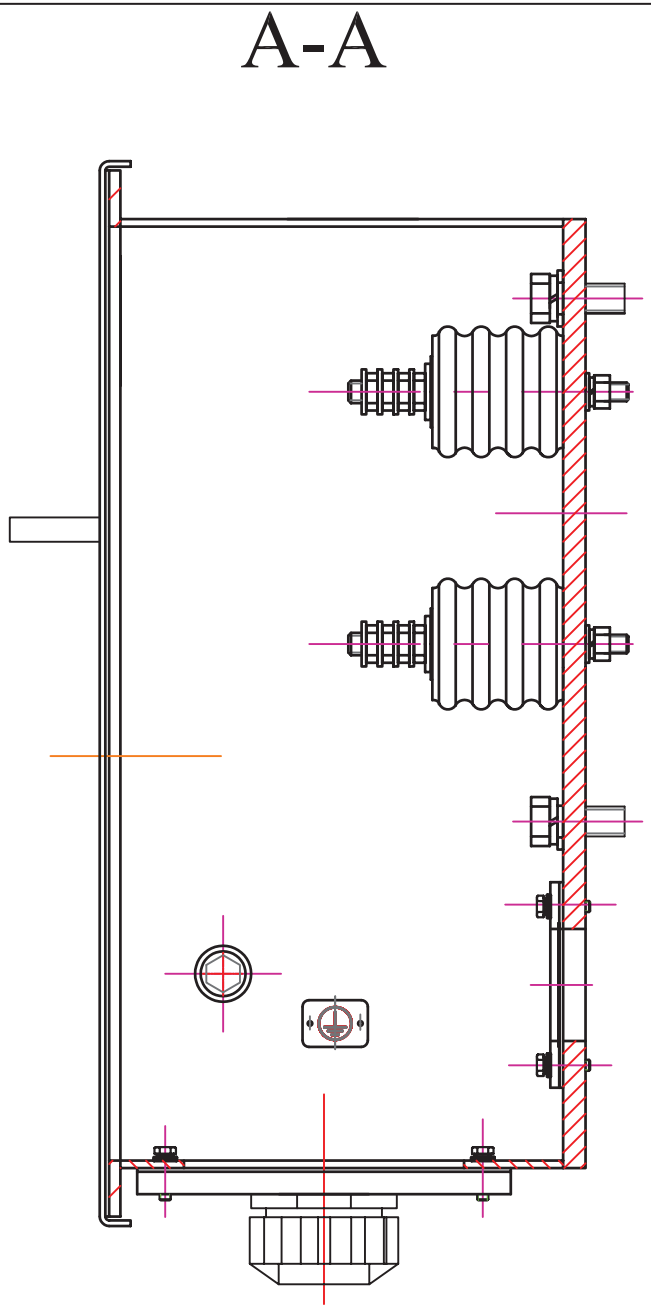

				Date	Signature
			Designed by	07/02/14	St.Karageorgis
			Checked by		
			Examine by		
			SCALE		
Change	Date	Name			

VALIADIS
HELLENIC MOTORS

STATOR TERMINAL BOX
Motor Type : TMKHV630-6
Mounting : B3

Design Number :
MTTMKHV-140207-3-4

Replaced from

Replace the

MOTOR TYPE : TMKHV450-4
MOUNTING : B3
770KW / 6.6KV

VALIADIS S.A. HELLENIC MOTORS	
Data Sheet	
Three phase Induction Motor	
Customer	
Client reference	
Type:	TMKHV450-4 770KW 6,6KV 50 Hz
Brand:	VALIADIS

Identification			
Frame:	450 mm	Insulation Class :	F
Output	770 KW	Temperature Rise :	80K
Frequency	50Hz	Service Factor :	1
Poles:	4p	Duty :	S1
Rated Speed :	1485 rpm	Ambient Temperature :	-20~40 oC
Slip:	0,01	Altitude:	1000 m
Rated Voltage :	6,6 KV	Protection Degree :	IP55
Connection:	Y	Cooling :	IC611
Rated Current:	83 A	Mounting :	IMB3
Rotor Voltage:	-	Vibration : mm/s	2,8
Connection:	-	Approx.Weight : Kg	4100
Rotor Current:	-	Moment of Inertia : Kg-m2	22
Locked Rotor Current :	650%	Noise Level (Lp) : dB(A)	96
No Load Current :	-	Direction of Rotation :	BOTH
Rated Torque :	4951,9 Nm	Starting Method :	DIRECT ON LINE
Locked Rotor Torque :	70%	Coupling :	DIRECT
Breakdown Torque:	180%	Load Type :	PARABOLIC CURVE

Performance			
Output	50%	75%	100%
Efficiency(%)	91,8	94,6	94,6
Power Factor	0,73	0,82	0,86

Bearing Information		
	DE	NDE
Bearing :	6326C3	6326C3
Regreasing int, (h)	4000	4000
Grease amount (g)	85	85
Grease-PolyrexEM	Caltex SRI-2	Caltex SRI-2

Notes / Accessories
With winding RTD: PT 100 6PCS
With bearing RTD: PT 100 2PCS
With space Heater 230V

Standards	
Specification	IEC60034-1
Test	IEC60034-2
Noise	IEC60034-9
Vibration	IEC60034-14

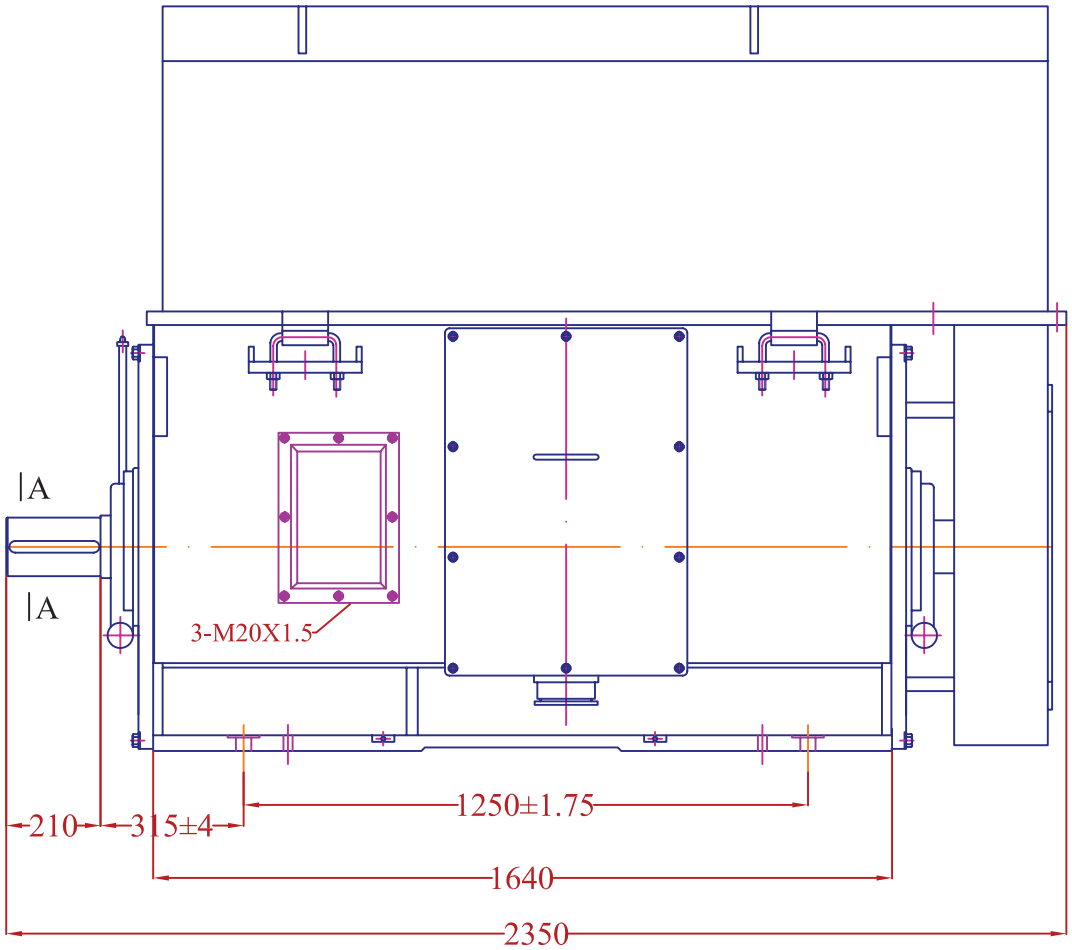

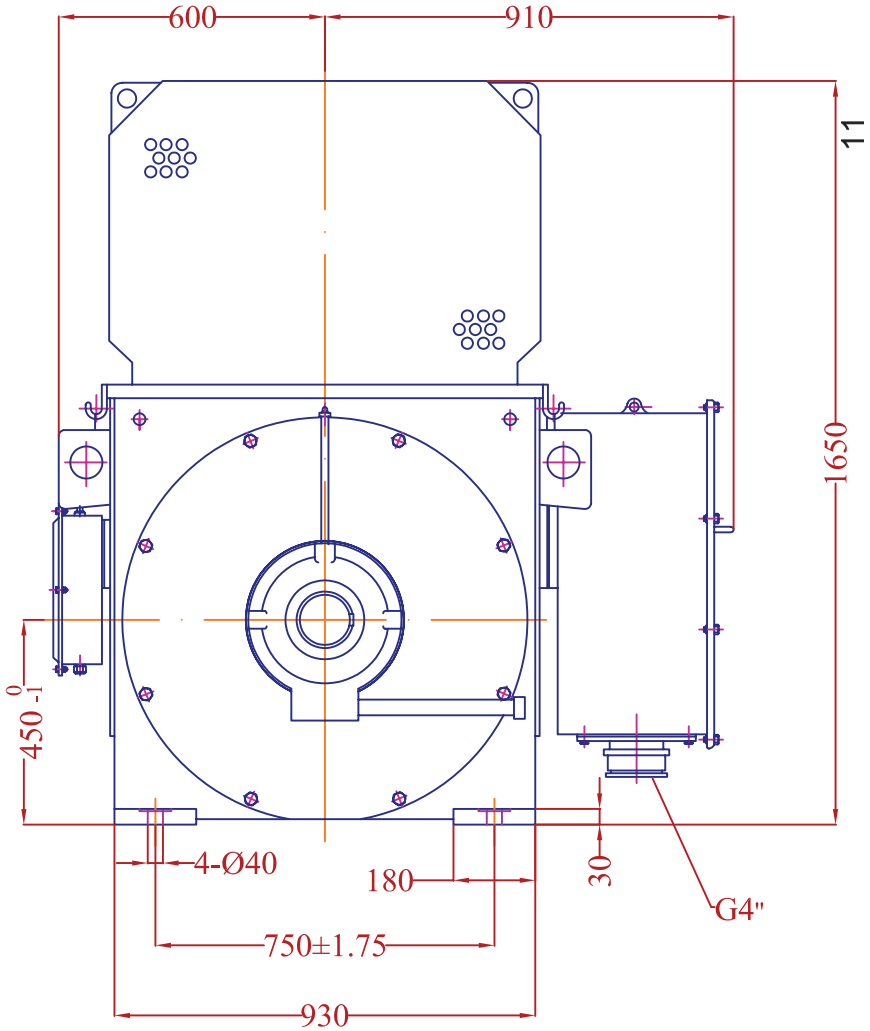

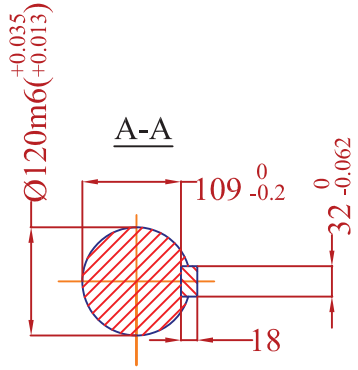

				Date	Signature
			Designed by	07/02/14	St.Karageorgis
			Checked by		
			Examine by		
Change	Date	Name			

VALIADIS
HELLENIC MOTORS

SCALE

Motor Type : TMKHV 450-4
Mounting : B3

Design Number :
MTTMKHV-140207-01

Replaced from

Replace the

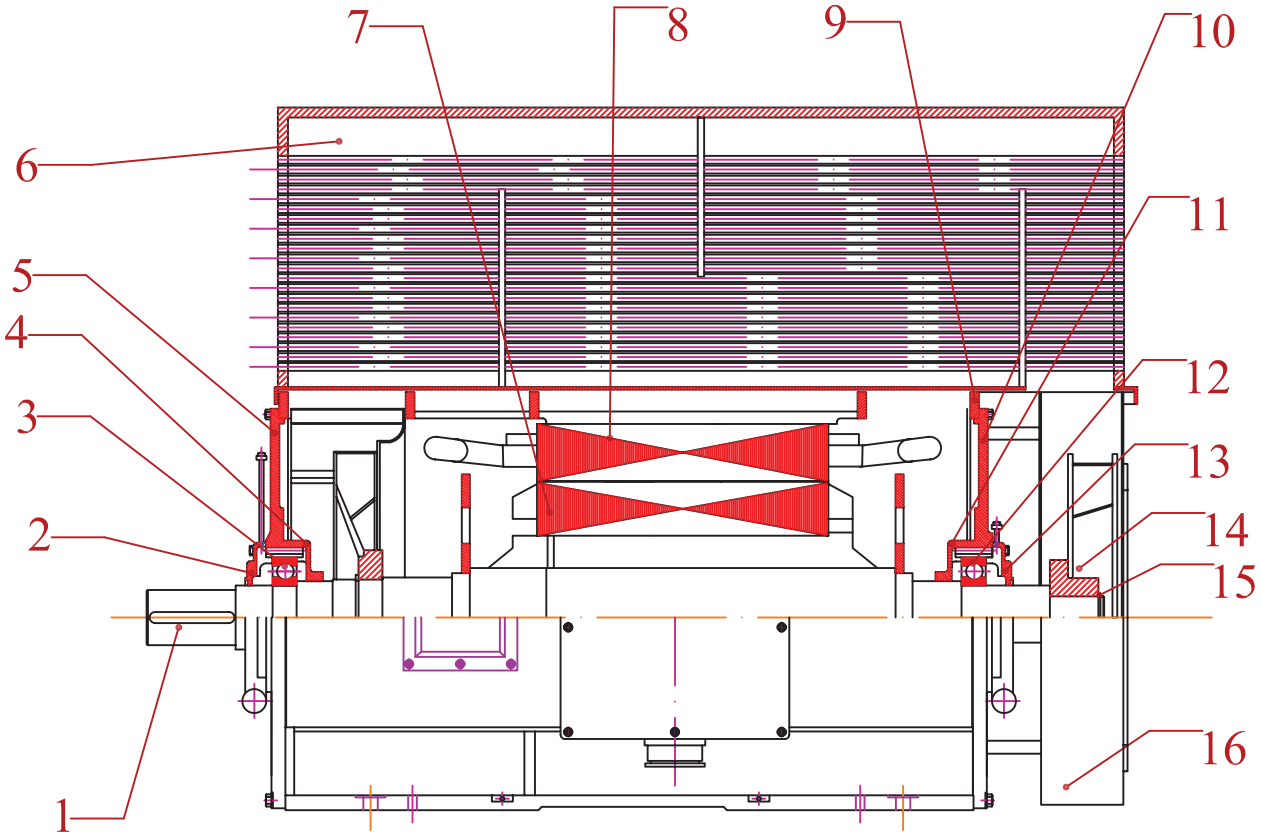

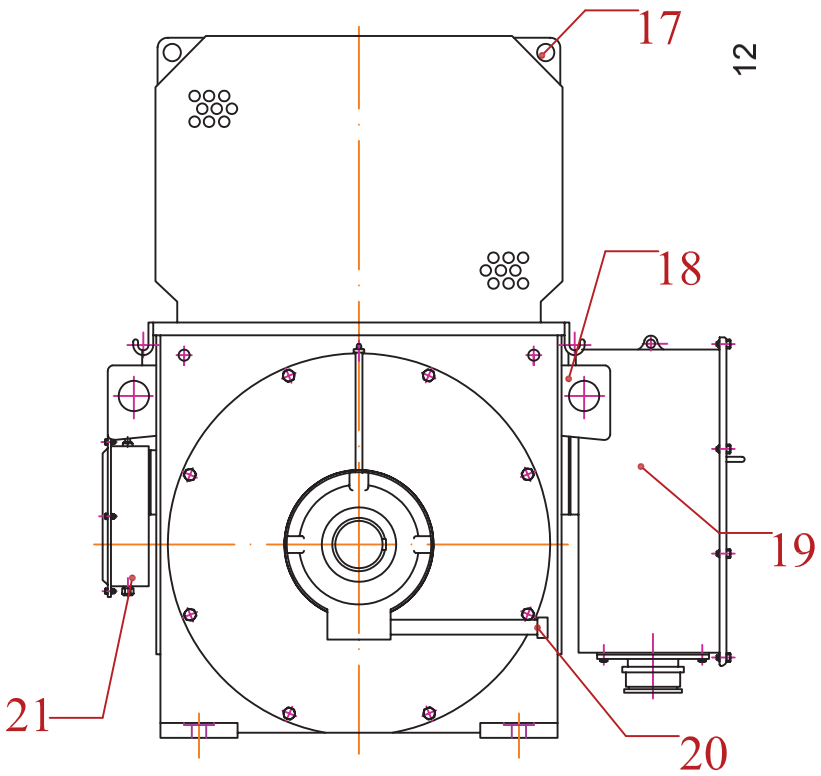

12

a/a	Name	pcs	
10	Endshield Non Driving End	1	
9	Frame	1	
8	Stator	1	
7	Rotor	1	
6	Air to Air Heat Exchanger	1	
5	Endshield Driving End	1	
4	Inside cover of Driving End Bearing	1	
3	Driving End Bearing	1	6326C3
2	Outside cover of Driving End Bearing	1	
1	Driving Shaft	1	

a/a	Name	pcs	
22		1	
21	Terminal box for auxiliary circuit	2	
20	Grease slinger of Driving End Bearing	1	
19	Stator Terminal Box (U-V-W)	1	
18	Lifting Lugs	4	
17	Lifting Lugs for Heat Exchanger	4	
16	Fan Cover	1	
15	Fan Circlip	1	
14	External Cooling Fan	1	
13	Outside cover of Non Driving End Bearing	1	
12	Non Driving End Bearing	1	6326C3
11	Inside cover of Non Driving End Bearing	1	

	Date	Signature
Designed by	07/02/14	St.Karageorgis
Checked by		
Examine by		

Change | Date | Name

SCALE

Motor Type : TMKHV450-4
Mounting : B3

VALIADIS
HELLENIC MOTORS

Design Number :
MTTMKHV-140207-01-2

Replaced from

Replace the

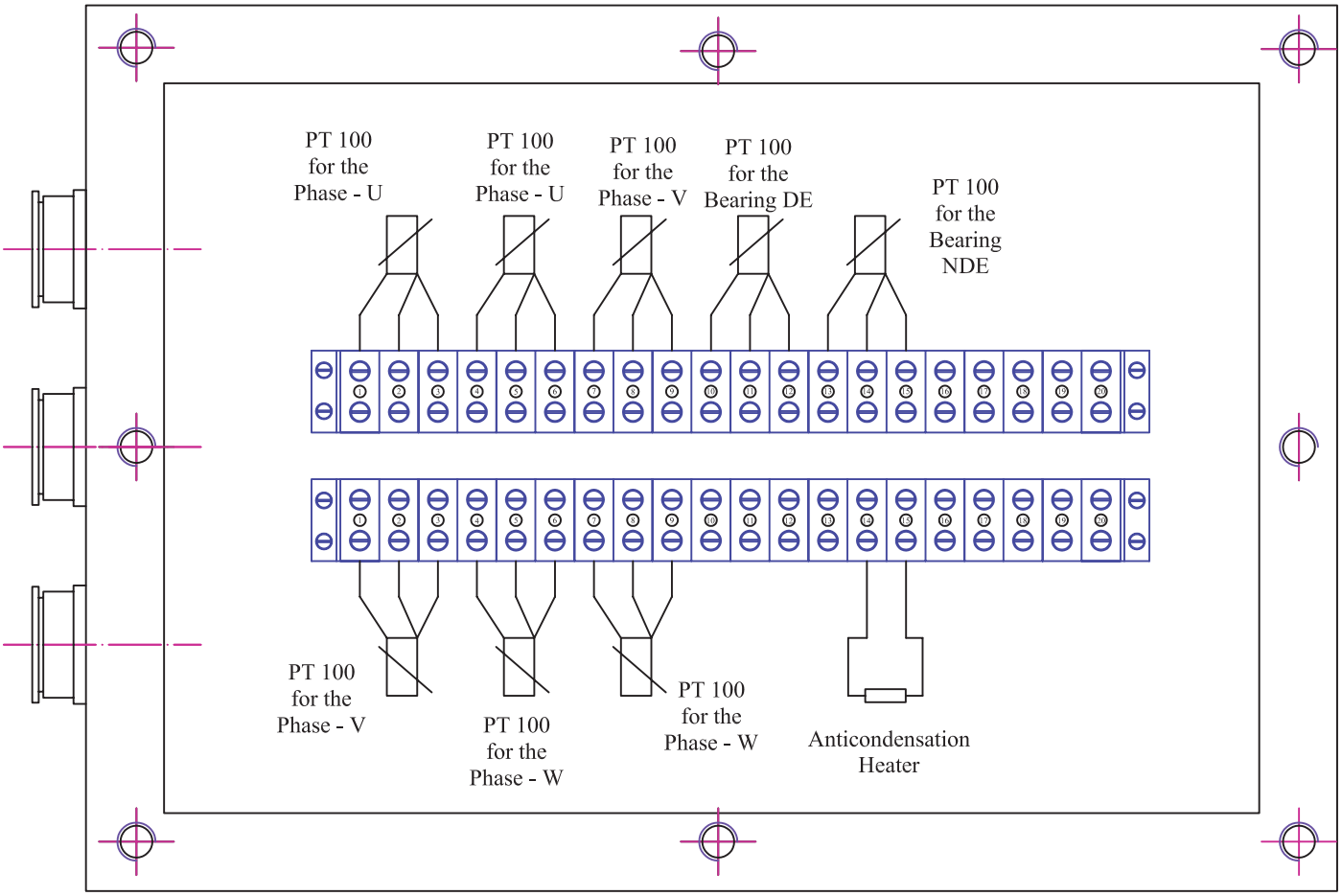

Name	Date	Change

		Date	Signature
Designed by	St.Karageorgis	07/02/14	
Checked by			
Examine by			

SCALE

VALIADIS
HELLENIC MOTORS

TERMINAL BOX FOR
AUXILIARY CIRCUIT
Motor Type : TMKHV 450-4
Mounting : B3

Design Number :
MTTMKHV-140207-01-3

Replaced from

Replace the

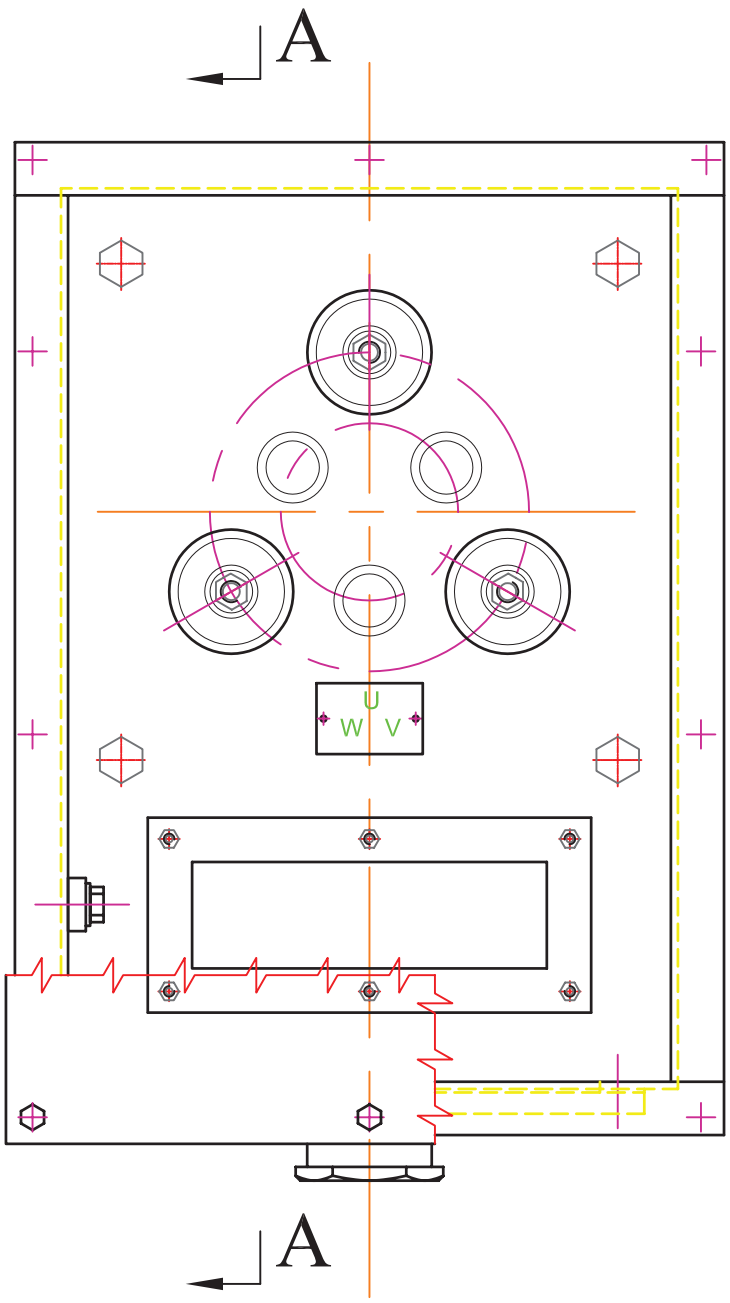

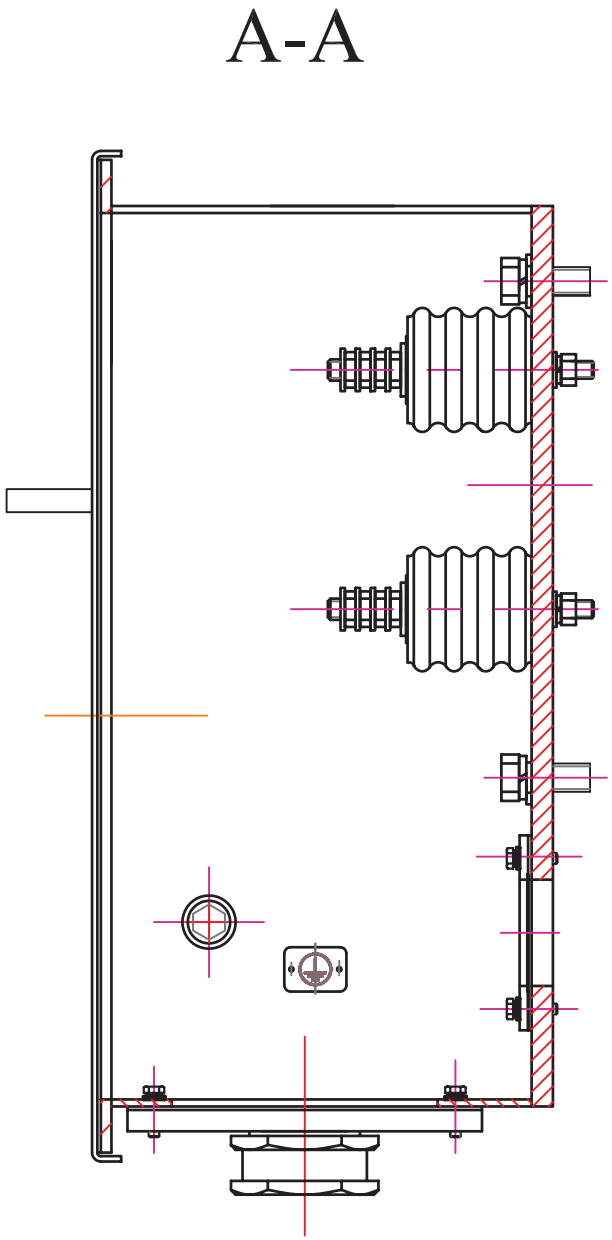

				Date	Signature
			Designed by	07/02/14	St.Karageorgis
			Checked by		
			Examine by		
Change	Date	Name	SCALE		

STATOR
TERMINAL BOX
Motor Type : TMKHV 450-4
Mounting : B3

VALIADIS
HELLENIC MOTORS

Design Number :
MTTMKHV-140207-01-4

Replaced from

Replace the

MOTOR TYPE : AB500-6
MOUNTING : B3
SLIP RING

Data Sheet

Three phase Induction Motor

Customer	
Client reference	
Type:	AB500-6 883kW 380V 50Hz
Brand:	

Identification

Frame:	500 mm	Insulation Class :	F
Output	883 KW	Temperature Rise :	80K
Frequency	50Hz	Service Factor :	1
Poles:	6p	Duty :	S1
Rated Speed :	990 rpm	Ambient Temperature :	-20~40 oC
Slip:	1%	Altitude:	1000 m
Rated Voltage :	380 V	Protection Degree :	IP23
Connection:	Δ	Cooling :	IC01
Rated Current:	1677,7 A	Mounting :	IMB3
Rotor Voltage:	947 V	Vibration : mm/s	2,8 mm/s
Connection:	Y	Approx.Weight : Kg	
Rotor Current:	561 A	Moment of Inertia : Kg-m2	
Locked Rotor Current :	%	Noise Level (Lp) : dB(A)	93
No Load Current :	-	Direction of Rotation :	BOTH
Rated Torque :	8517,8 Nm	Starting Method :	DIRECT ON LINE
Locked Rotor Torque :	%	Coupling :	DIRECT
Breakdown Torque:	200%	Load Type :	PARABOLIC CURVE

Performance

Output	50%	75%	100%
Efficiency(%)	92,3	95,3	95,2
Power Factor	0,71	0,8	0,84

Notes / Accessories

With winding RTD: PT 100 6PCS
With bearing RTD: PT 100 2PCS
With space Heater 220V 2X250W

Bearing Information

	DE	NDE
Bearing :	6330C3	6330C3
Regreasing int, (h)	4000	4000
Grease amount (g)	110	140
Grease-PolyrexEM	Caltex SRI-2	Caltex SRI-2

Standards

Specification	IEC60034-1
Test	IEC60034-2
Noise	IEC60034-9
Vibration	IEC60034-14

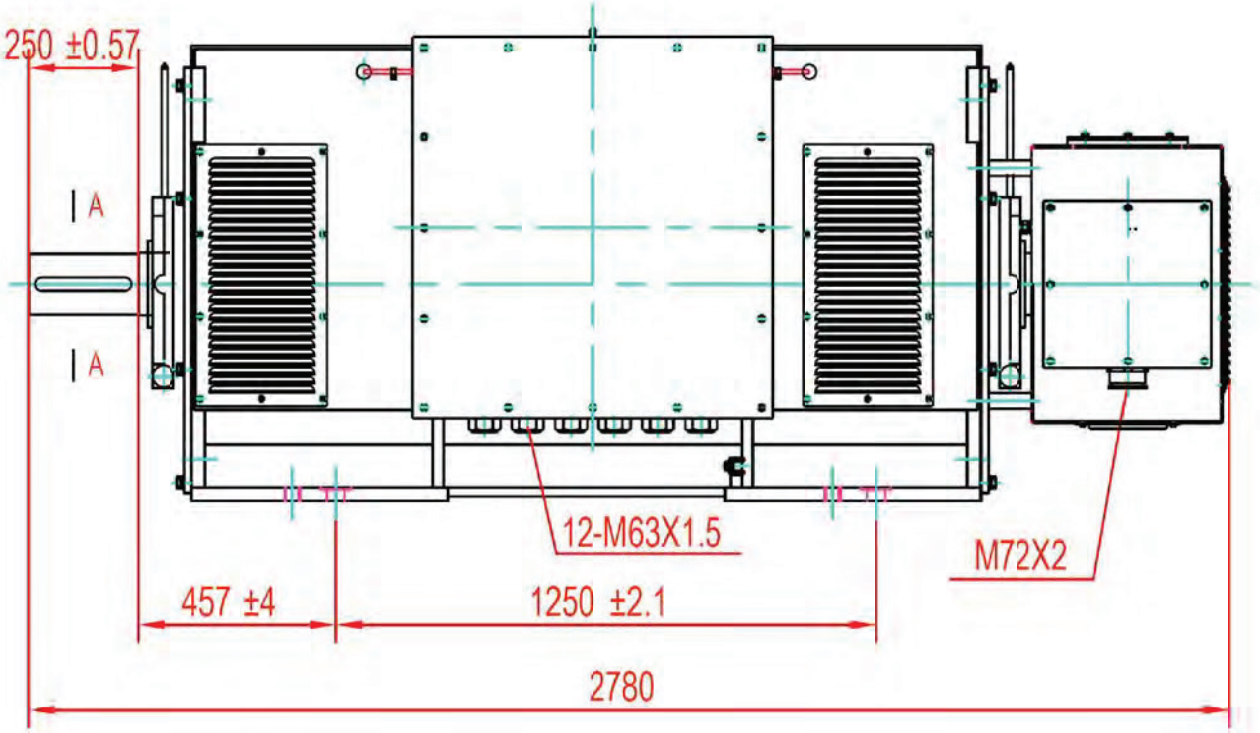

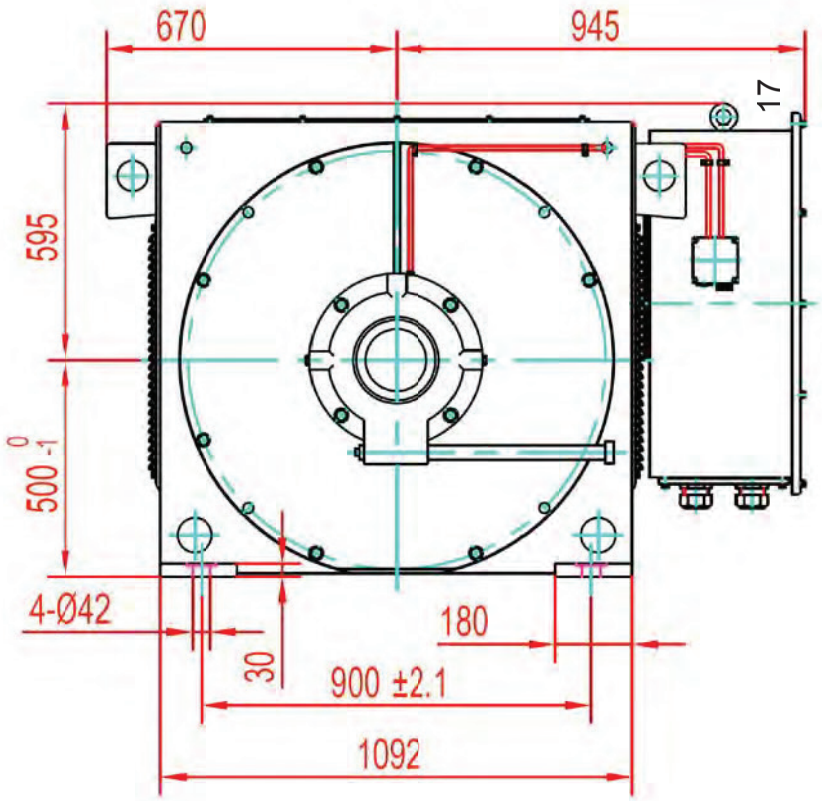

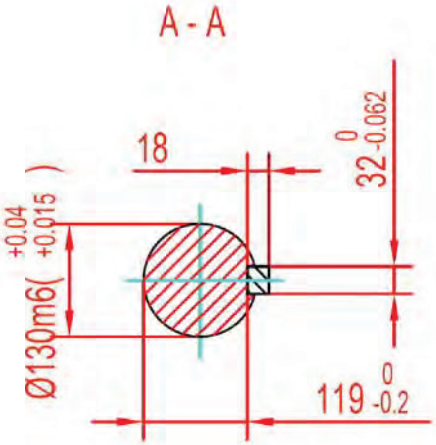

				Date	Signature	
			Designed by	12/02/14	St.Karageorgis	
			Checked by			
			Examine by			
Change	Date	Name	SCALE	Motor Type : AB 500-6 Mounting : B3 SLIP RING	Design Number : MTAB-140212-2	
					Replaced from	
					Replace the	

MOTOR TYPE : TMKHV400-6
MOUNTING : B3

WITH SPECIAL SHAFT Ø130 mm
AND BASE TO MEET 467 mm

VALIADIS S.A.

Hellenic Motors

Quality Assurance Certificate EN ISO 9001:2008

Certificate Reg.No. 04100970683

Motor Specification Data Sheet.

Frame No.	400-1250	**400**
Standard	IEC	√
Mounting	Horizontal	√
Rated output power	540 KW or nearest higher capacity.	**540kW**
Rated current	60.4 Amps	**57.1A**
Rated voltage	6600 Volts	√
Frequency	50 Hz	√
No. of pole	06	√
Rated speed	980 rpm	**990RPM**
Connection	Y	√
Power factor	0.85	**0.87**
Efficiency	92%	**95.1%**
Direction of rotation	Counter clockwise (viewed from DE)	√
Insulation class/Temperature raise	F/F	√
Ambient temperature	41°C	√
Rated torque	542 Kg-m	**5209Nm**
Starting torque	130% of rated torque.	**90%**
Break down torque	250% of rated torque.	**2.80%**
$GD^2$of motor	103 kg-m^2	**112kgm^2**
$GD^2$of load	5100 kg-m^2	√
Duty cycle/Service factor	Continuous/I	√
Starting method	Direct on line (DOL)	√
Motor enclosure protection	IPW 24	√
Motor terminal box protection	IP 55	√
Motor load	Induced draft fan.	√
Motor body material	Cast Iron	√
Space heater	1x3, 230-240V, 50Hz, 400W (Bottom of the motor body)	√
Main terminal box position	Left side on non driving end viewed from driving shaft end.	√
Auxiliary terminal box Position	Left side viewed from driving end.	√
Power cable gland size	NPSC 2" for 3C-22 mm^2 cable, G- wire size 38 mm^2	√
Power cable entrance into the terminal box	Power cable entrance into the main terminal box is to be through removing gland plate.	√

Frame Size	Dimension in mm (Standard IEC)										
400-1250	A	B	C	D	E	F	G	GA	H	K	√
	686	1250	315	130	250	32	119	137	400	43	
*	*	*	*	*	*	*	*	*	*	*	

ATHENS : *18, Gr. Labraki Str., 141 23 Likovrisi Tel : +30210-2817217, Fax : +30210-2814277*
THESSALONIKI *: INDUSTRIAL ARE OF SINDOS., O.T. 48B, 15η STREET, 570 22*
Tel :+302310–796646, Fax :+302310–796645
e-mail : valiadis@valiadis.gr – http : //www.valiadis.gr

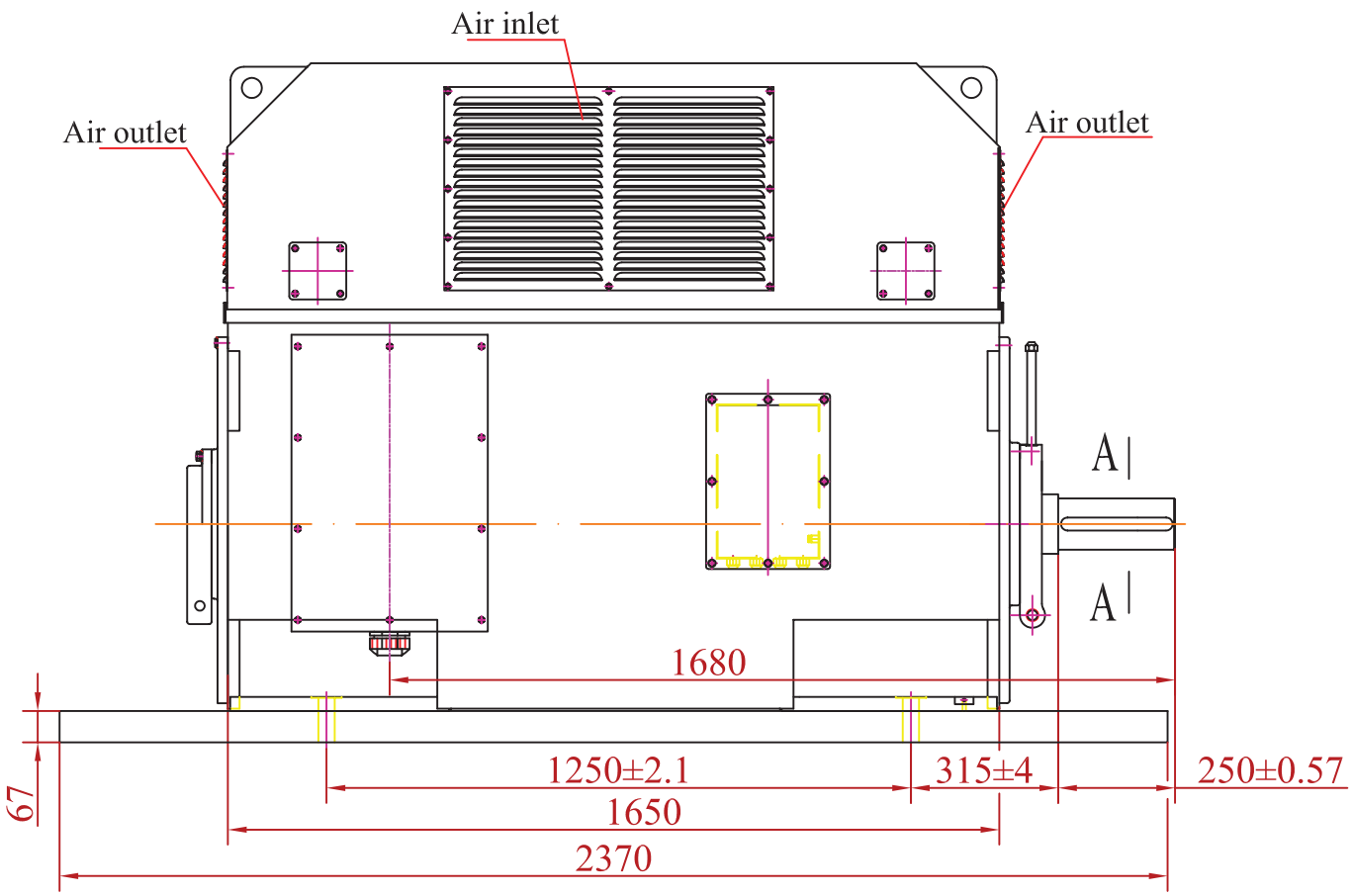

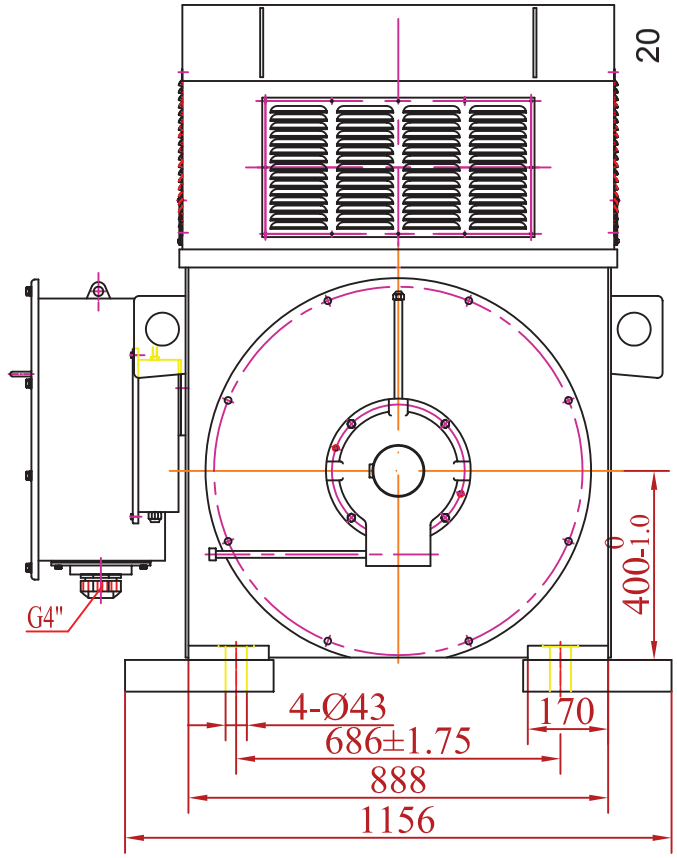

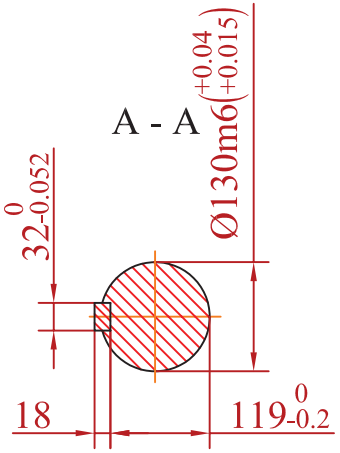

				Date	Signature
			Designed by	17/12/13	St.Karageorgis
			Checked by		
			Examine by		
Change	Date	Name			

VALIADIS
HELLENIC MOTORS

SCALE
1:16

Motor Type : TMKHV400-6
Mounting : B3
with Base to meet 467 mm
and special shaft Ø130 mm

Design Number :
MWSD-131217-2

Replaced from

Replace the

MOTOR TYPE : KHV355-4
MOUNTING : B3

VALIADIS S.A.

Quality Assurance Certificate EN ISO 9001:2008

KHV 355-4 / 6000V / 250KW No:201108730

Test Results Data

Nameplate data

Type	KHV355-4	Cos φ	0.84
Rated voltage	6000 V	Connection	Y
Rated current	30 A	Duty	S1
Rated power	250 KW	Ins .Class	F
Rated speed	1485 r/min	Pro. Class	IP65
Efficiency	94.3 %	Serial No.	201108730
Frequency	50 Hz		

No-load test **At rated voltage Un**

No load loss	10072.00 (W)	**No load current**	10.87 (A)
Machine loss	2535.00 (W)	**Core loss**	7210.00 (W)
Degrees of unbalance in a three phase system (current)			1.17 (%)

Temperature-rise test **Running at rated frequency**

Voltage	6000.0 (V)	**Current**	30.06 (A)
Power	268272.0 (W)	**Temperature – rise Δ θ**	65.70 (K)
Stator temperature	26.1 (°C)	**Bearing temperature**	77.7 (°C)

Load performance

Load	U_N (V)	f(Hz)	P1(W)	I1(A)	n(r/min)	T(N*m)	Cos φ	Eff (%)
125%	6000	50	332875.0	37.13	1480.8	2015.1	0.863	93.88
100%	6000	50	266429.0	30.01	1485.8	1606.7	0.854	93.83
75%	6000	50	201142.0	23.56	1490.1	1201.6	0.821	93.22
50%	6000	50	136792.0	17.80	1493.6	799.2	0.740	91.38
25%	6000	50	73166.0	12.70	1496.4	398.8	0.554	85.42

Temperature-rise at rated voltage and frequency and full-load current 65.48 (K)

ATHENS : 18, Gr. Labraki Str., 141 23 Likovrisi Tel : +30210-2817217, Fax : +30210-2814277
THESSALONIKI : INDUSTRIAL ARE OF SINDOS., O.T. 48B, 15η STREET, 570 22
Tel :+302310–796646, Fax :+302310–796645
e-mail : valiadis@valiadis.gr – http : //www.valiadis.gr
ROMANIA: 1, Aleea Meseriasilor, Bloc C93, Etaj 2, Ap.16, Sector 6, 061647-Bucharest, ROMANIA
Tel : ++4021 413 5902, Fax: ++4031 815 6441, ++4031 816 5216
ε-mail: romania@valiadis.gr -http:// www.ac-motors.eu

Locked test

Rated current	30	(A)	**Starting current**	214.80	(A)
Starting torque	2568.90	(N*m)	**Rated torque**	1608	(N*m)
Locked/Rated current	7.16		**Locked / Rated torque**	1.60	

Noise and Vibration **Running at rated voltage and frequency**

Noise (Measured at 1.00 m far away from the motor)(sound power level (A))	105.0 (dB)
Vibration	1.4 (mm/S)

Inspector		**Check**		**Date**	

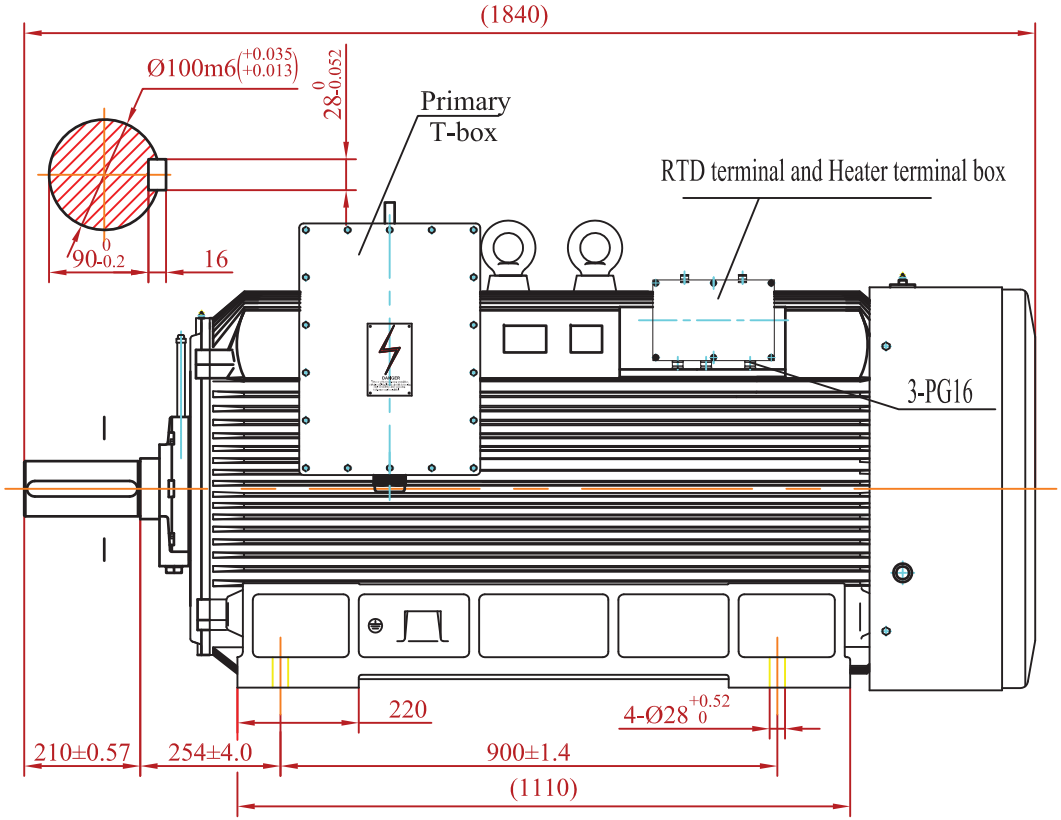

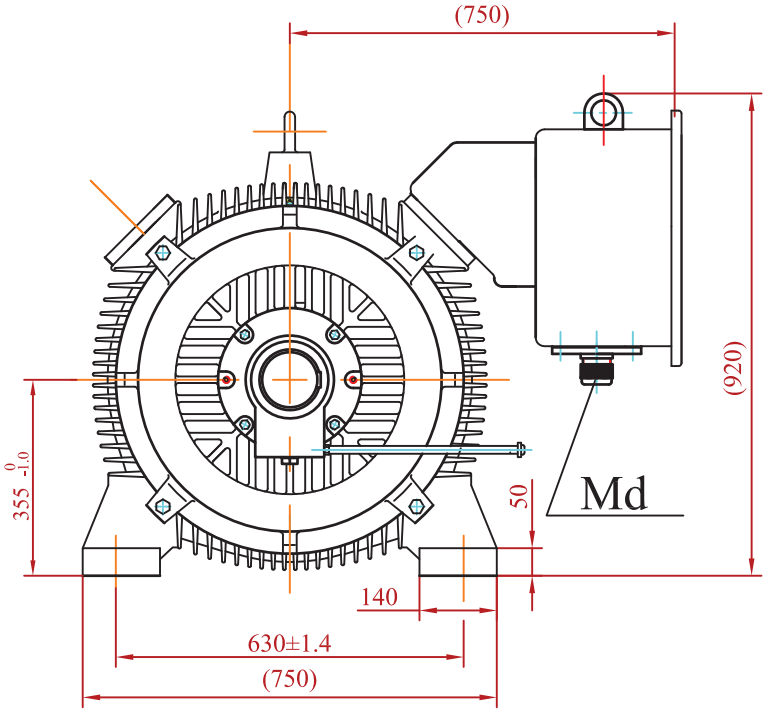

Type	Power (kW)	Voltage (V)	frequency (HZ)	Full load				Breakdown torque / rated torque	Locked rotor current / rated current	Locked torque / rated torque	IP	Weight (kg)	3-MOT.Nr	Md
				current (A)	speed (r/min)	Efficiency(%)	Power factor							
KHV-355-4	250	6000	25-50	30	1485	94.3	0.84	2.0	6.5	0.8	IP65	2600	201108730	M90X2(Ø66-Ø70)
KHV-355-4	250	6000	25-50	30	1485	94.3	0.84	2.0	6.5	0.8	IP65	2600	201108731	M70X2(Ø45-Ø53)

Technical requirements

1. The direction of rotation viewed from the shaft end could be clockwise or unclockwise.But couldn't be rotate to and fro or plug braking.
2. Protection IP65. IMB3
3. Insulation class F.
4. Cooling type IC411.
5. Bearing grease UnirexN2,shaft insulated
   Bearing type : Driving end 6322/C3 ,Non driving end 6322/C3
6. Temperature thermistor for winding and bearing is Pt100.
7. Heater :AC/220V 2X80W.

Change	Date	Name

	Date	Signature
Designed by		
Checked by		
Examine by		

VALIADIS
HELLENIC MOTORS

SCALE

Motor Type : KHV355-4
Mounting : B3

Design Number :

Replaced from

Replace the

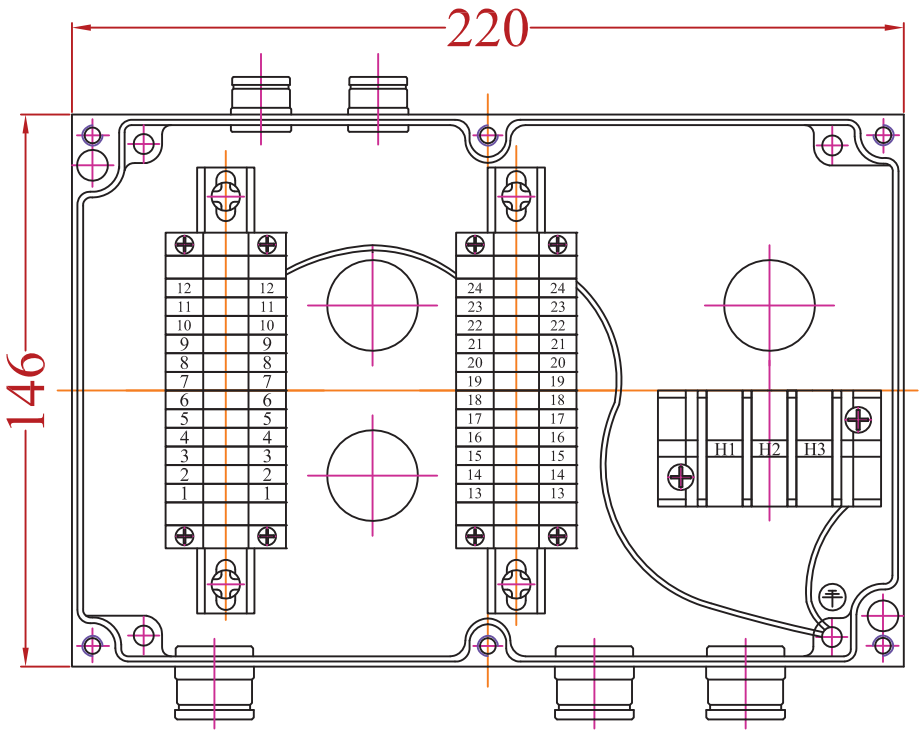

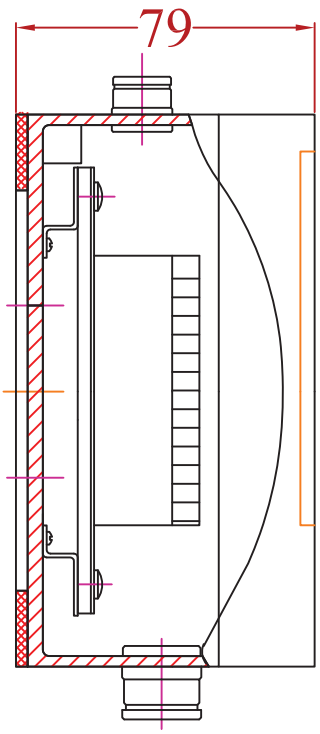

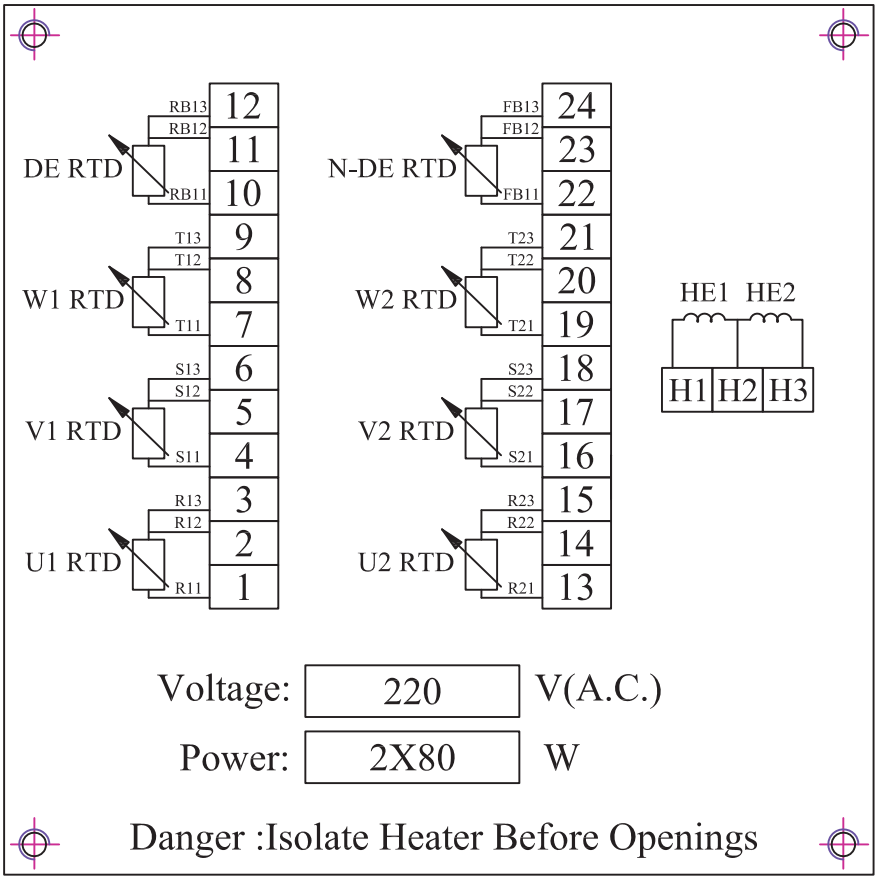

				Date	Signature	Weight :
			Designed by	24/04/12	St.Karageorgis	3 Kg
			Checked by			
			Examine by			
Change	Date	Name	SCALE 1:2	Heater and RTD Terminal box KHV 355-4 /6kV		

VALIADIS
HELLENIC MOTORS

Design Number :

Replaced from

Replace the

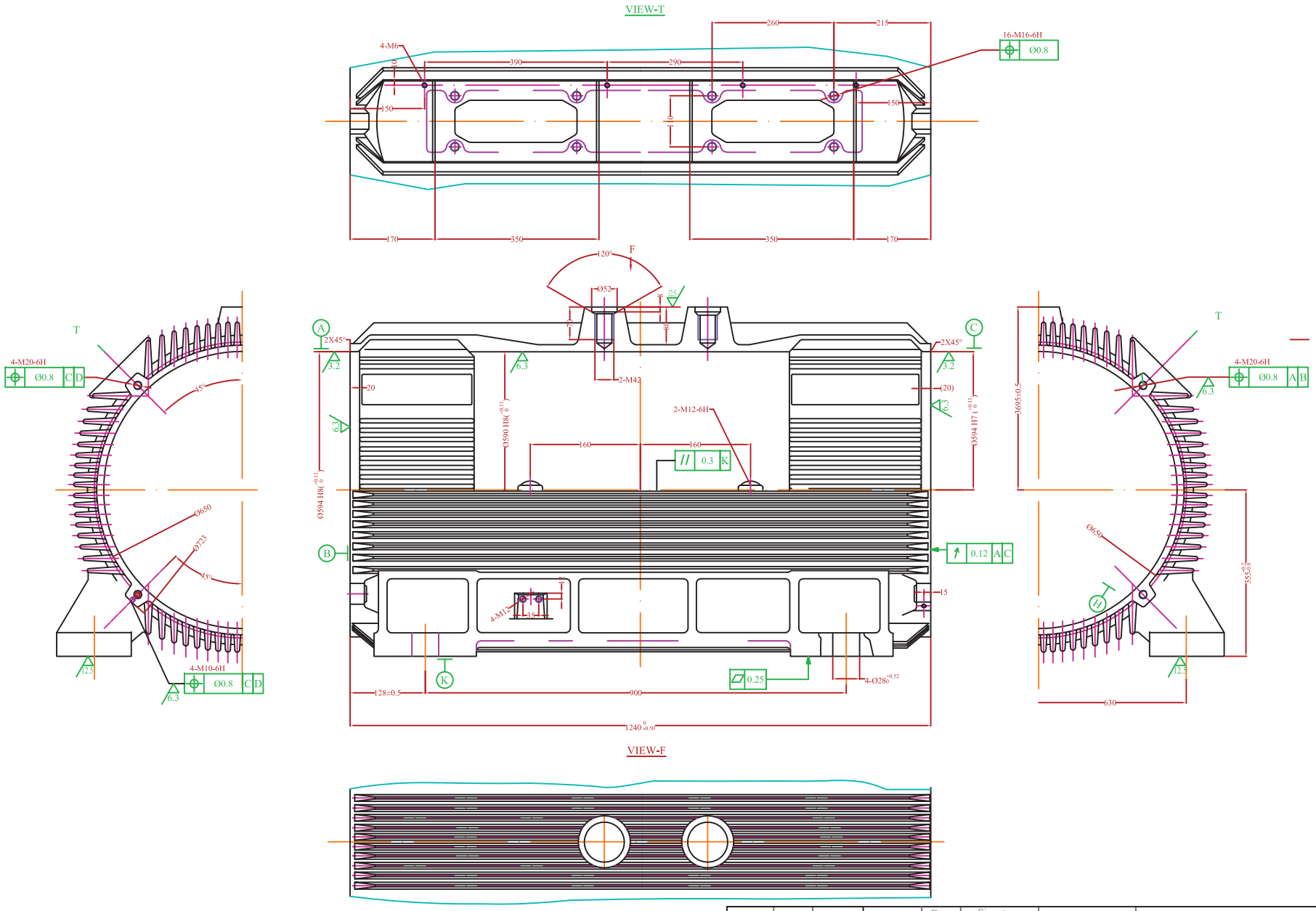

				Date	Signature	
			Designed by	09/04/12	St.Karageorgis	
			Checked by			
			Examine by			
Change	Date	Name	SCALE			

VALIADIS
HELLENIC MOTORS

Frame
Motor Type : KHV 355

Design Number :

Replaced from

Replace the

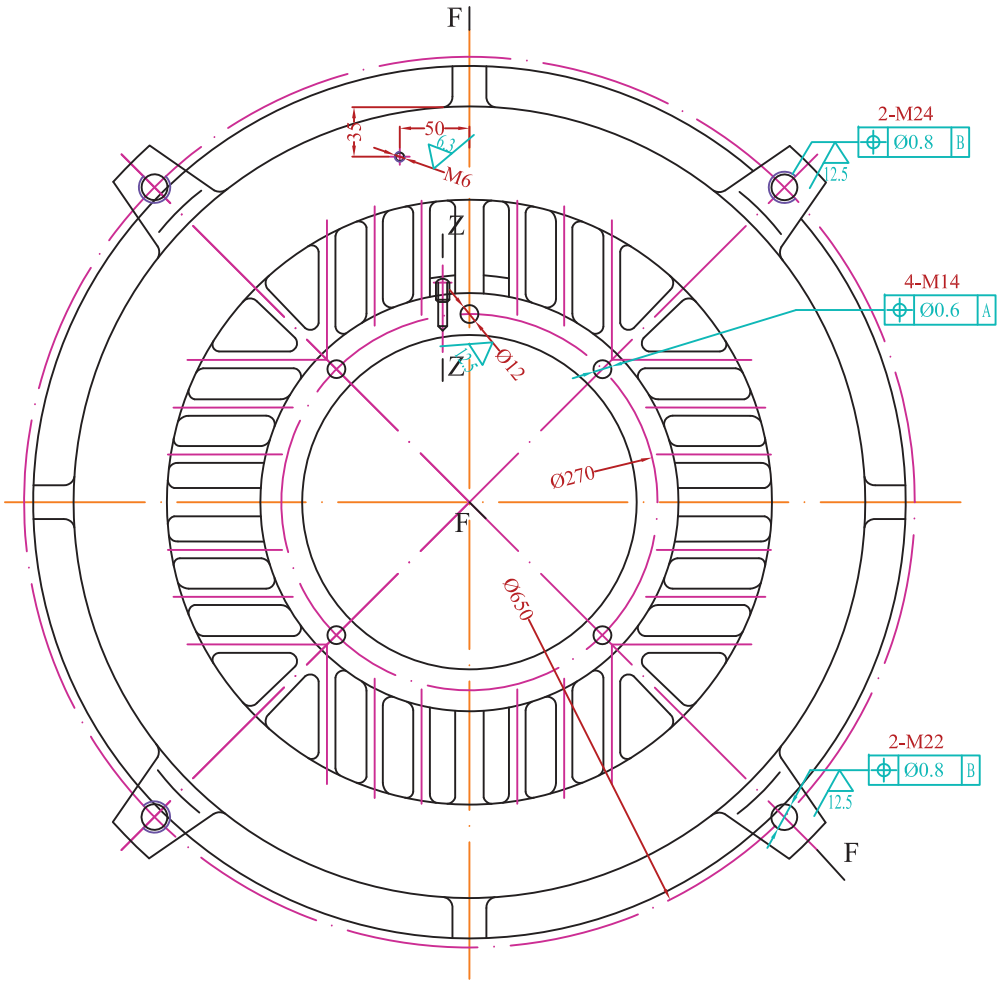

F-F

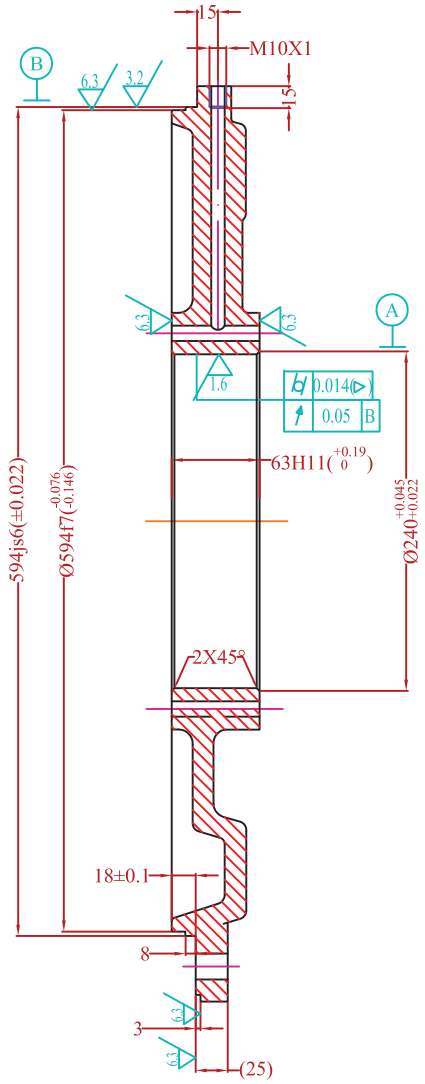

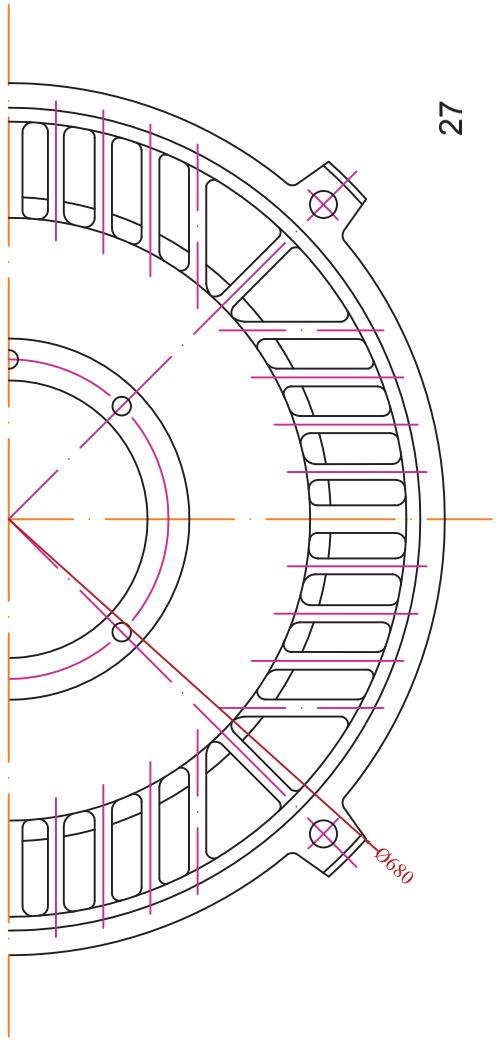

Z-Z

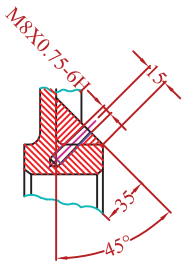

				Date	Signature	
			Designed by	10/04/12	St.Karageorgis	
			Checked by			
			Examine by			
			SCALE			
Change	Date	Name				

VALIADIS
HELLENIC MOTORS

DE - END SHIELD
Motor Type : KHV355-4

Design Number :

Replaced from

Replace the

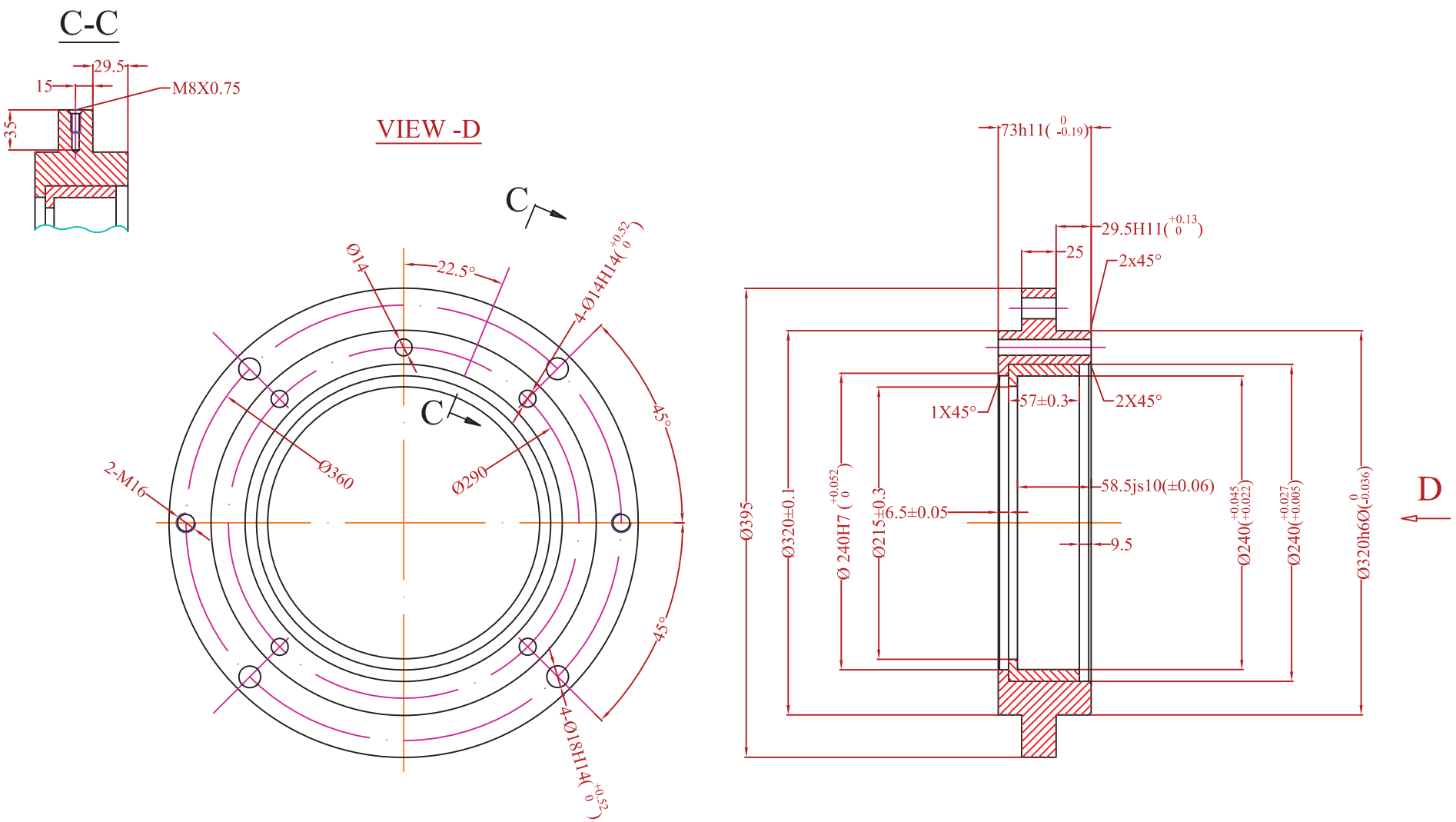

				Date	Signature
			Designed by	17/04/12	St. Karageorgis
			Checked by		
			Examine by		
Change	Date	Name	SCALE		

VALIADIS
HELLENIC MOTORS

INSULATION BEARING SLEEVE
Motor Type:KHV355-4

Design Number :

Replaced from

Replace the

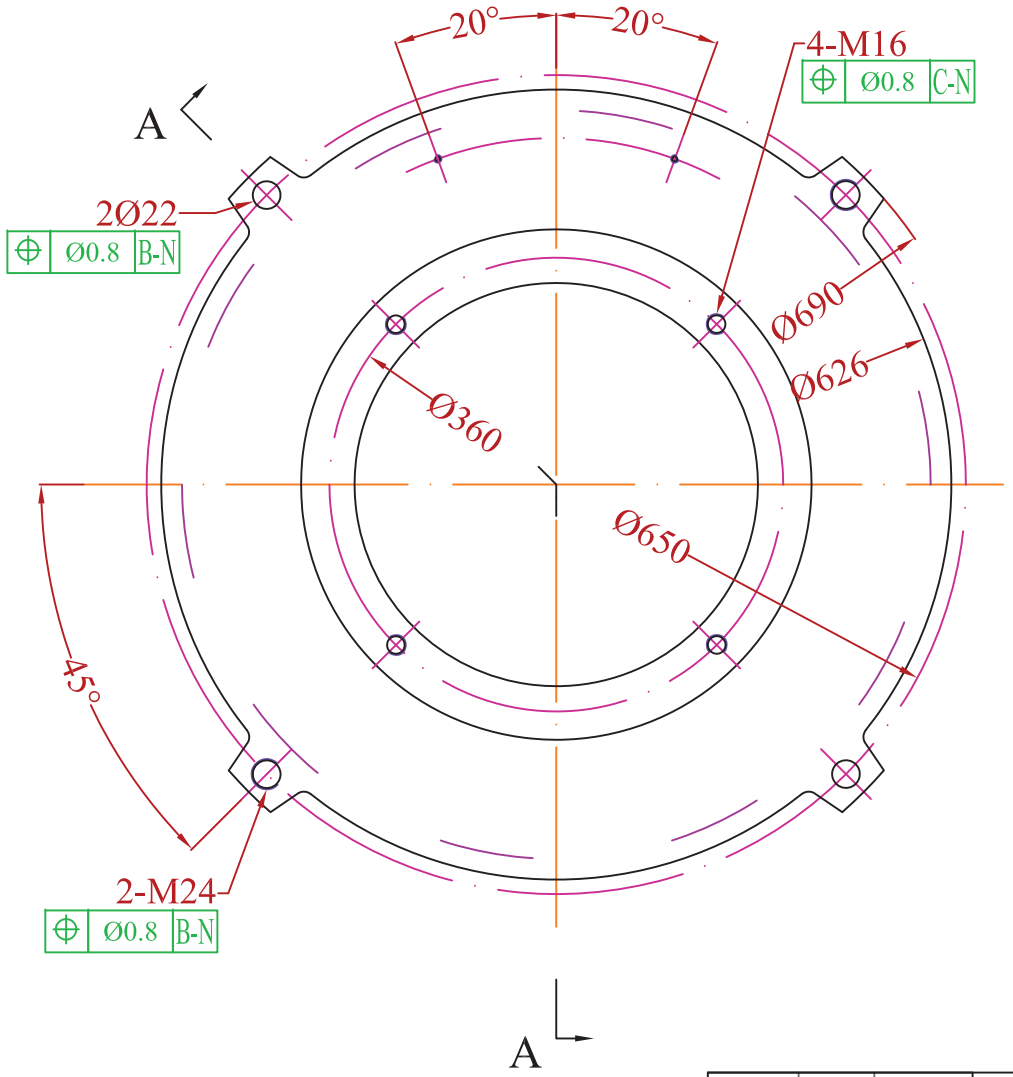

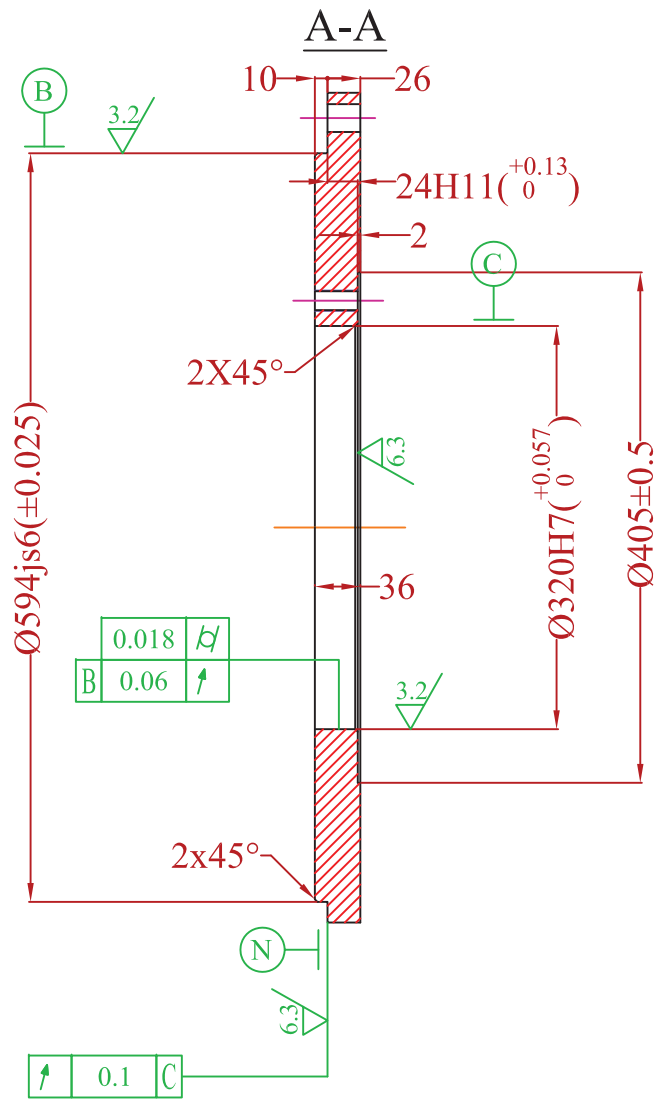

29

				Date	Signature
			Designed by	19/04/12	St.Karageorgis
			Checked by		
			Examine by		
Change	Date	Name			

VALIADIS
HELLENIC MOTORS

SCALE
1:6

NED END SHIELD
Motor Type : KHV355-4

Design Number :

Replaced from

Replace the

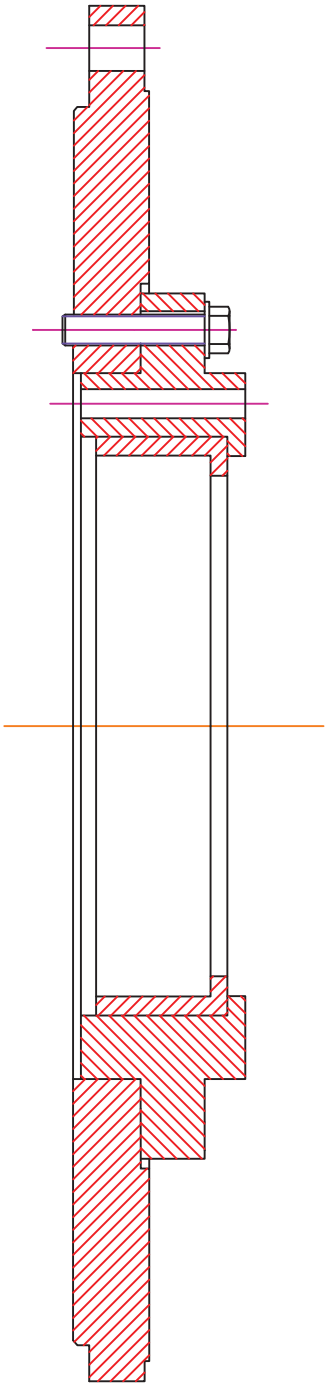

				Date	Signature
			Designed by	24/04/12	St.Karageorgis
			Checked by		
			Examine by		
Change	Date	Name	SCALE		

VALIADIS
HELLENIC MOTORS

Insulation End Shield
Motor Type : KHV355-4

Design Number :

Replaced from

Replace the

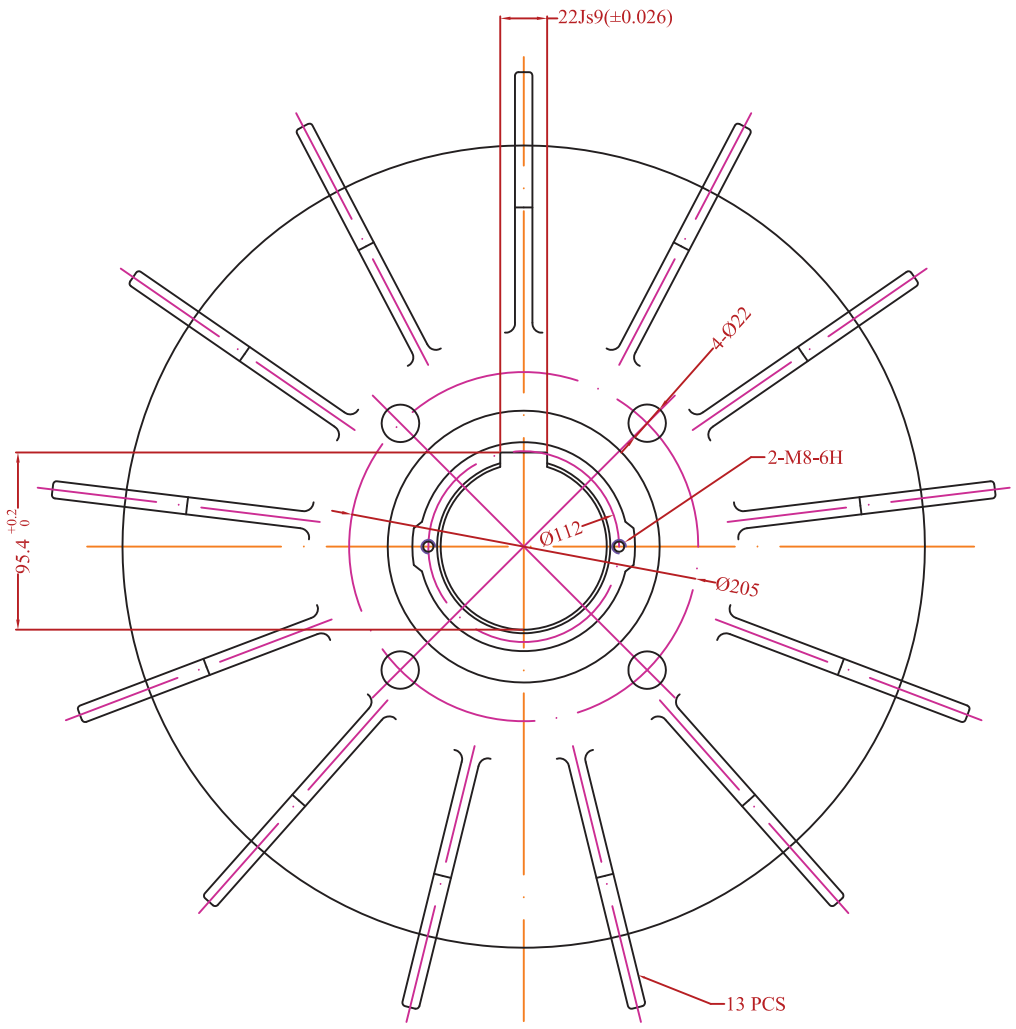

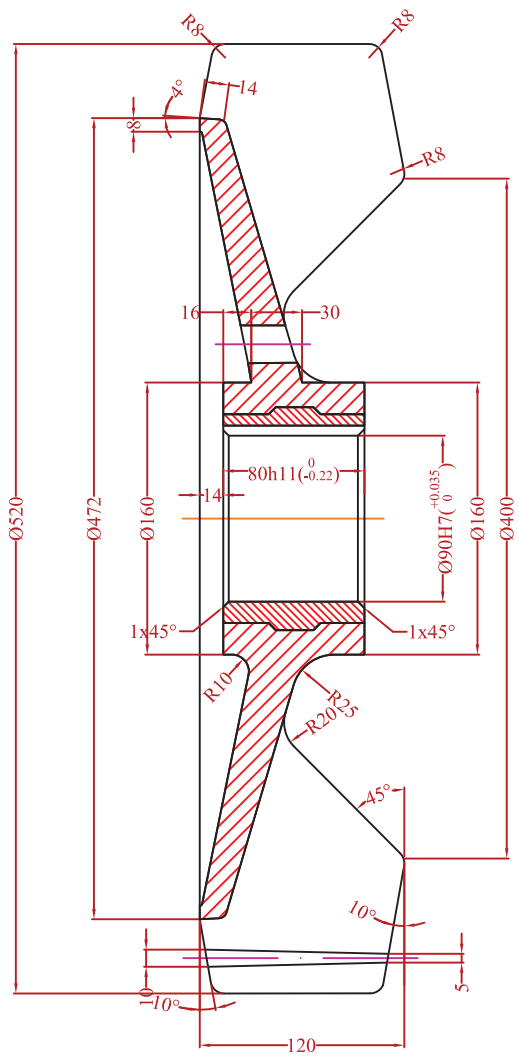

				Date	Signature		
			Designed by	11/04/12	St.Karageorgis		VALIADIS HELLENIC MOTORS
			Checked by				
			Examine by				
			SCALE				Design Number :
							Replaced from
							Replace the
Change	Date	Name					

Fan

Motor Type:KHV355-4

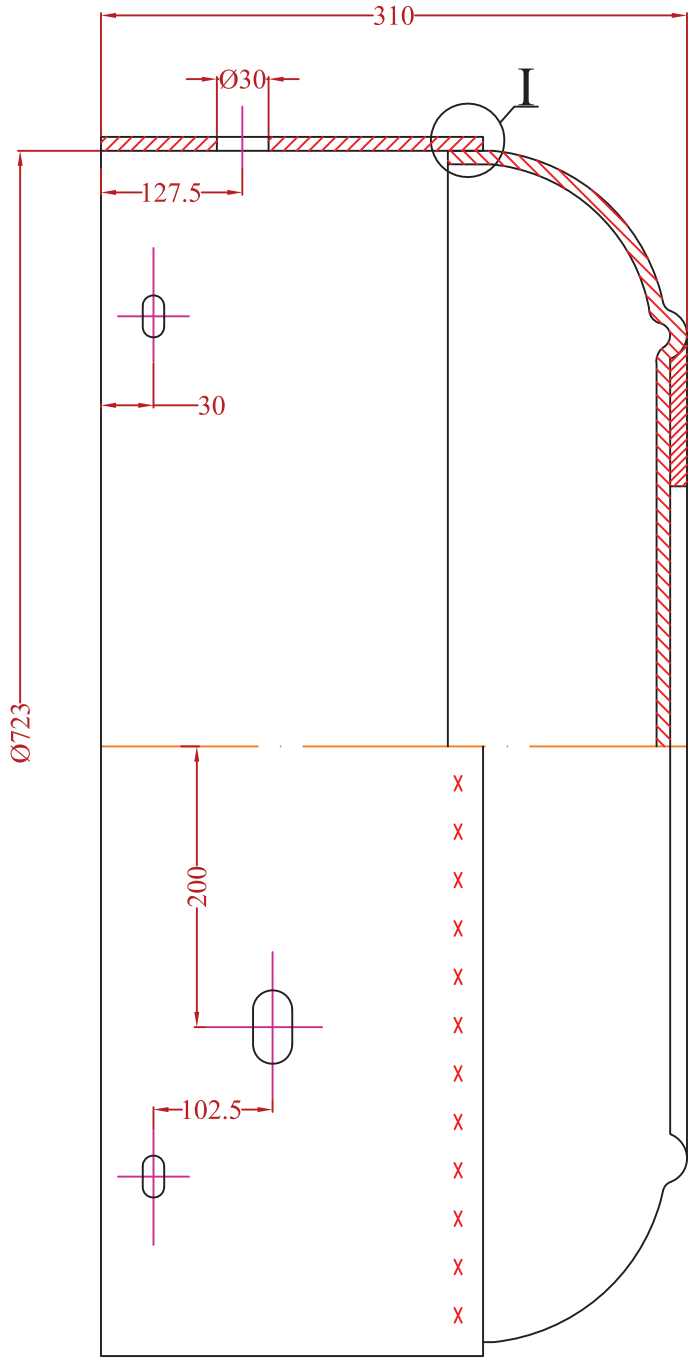

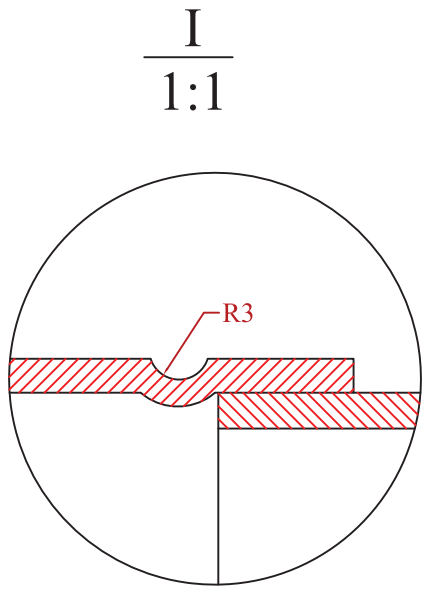

32

				Date	Signature
			Designed by	17/04/12	St.Karageorgis
			Checked by		
			Examine by		
Change	Date	Name	SCALE		

VALIADIS
HELLENIC MOTORS

FAN COVER

Motor Type : KHV355-4

Design Number :

Replaced from

Replace the

MOTOR TYPE : KHV400-4
MOUNTING : B3

VALIADIS S.A.

Quality Assurance Certificate EN ISO 9001:2008

KHV 400-4 / 6000V / 450KW No:201108729

Test Results Data

Nameplate data

Type	KHV400-4	Serial No.	201108729
Rated voltage	6000 V	Connection	Y
Rated current	53 A	Duty	S1
Rated power	450 KW	Ins .Class	F
Rated speed	1485 r/min	Pro. Class	IP65
Frequency	50 Hz		

No-load test

Rated power	13758.00	(W)	**No load current**	12.67	(A)
Machine loss	5487.00	(W)	**Core loss**	8066.00	(W)
Degrees of unbalance in a three phase system (current)				1.12	(%)

Locked Current	377.14	(A)
Locked Current/Rated Current	7.12	
Locked Torque	3935	(Nm)
Rated Torque	2894	(Nm)
Locked Torque/Rated Torque	1.36	
Max Torque	8204.89	(Nm)
Max Torque/Rated Torque	2.84	
Full Load Input Power	473346	(W)
Full Load Current	52.97	(A)
Power Factor @ Full Load	0.86	
Full-Load Slip	0.738	%
Stator Copper Loss	3976	(W)
Rotor Copper Loss	3453	(W)
Stray-Load Loss	2364	(W)
Efficiency	95.07	(%)
Ambient Temperature	21.8	(^oC)
Stator Winding Temperature Rise	89.4	(K)
Stator Winding Resistance	0.9447	(Ω)
Noise	103.3	(dB)
Displacement Vibration	35	(μm)
Acceleration Vibration	2.8	(m/S^2)

ATHENS : 18, Gr. Labraki Str., 141 23 Likovrisi Tel : +30210-2817217, Fax : +30210-2814277
THESSALONIKI : INDUSTRIAL ARE OF SINDOS., O.T. 48B, 15η STREET, 570 22
Tel :+302310–796646, Fax :+302310–796645
e-mail : valiadis@valiadis.gr – http : //www.valiadis.gr
ROMANIA: 1, Aleea Meseriasilor, Bloc C93, Etaj 2, Ap.16, Sector 6, 061647-Bucharest, ROMANIA
Tel : ++4021 413 5902, Fax: ++4031 815 6441, ++4031 816 5216
ε-mail: romania@valiadis.gr -http:// www.ac-motors.eu

Speed Vibration	1.8	(mm/S)
Hot Insulation Resistance	500	(MΩ)
Bearing temperature	77.9	(^{o}C)

Inspector		**Check**		**Date**	

ATHENS : *18, Gr. Labraki Str., 141 23 Likovrisi Tel : +30210-2817217, Fax : +30210-2814277*
THESSALONIKI *: INDUSTRIAL ARE OF SINDOS., O.T. 48B, 15η STREET, 570 22*
Tel :+302310–796646, Fax :+302310–796645
e-mail : valiadis@valiadis.gr – http : //www.valiadis.gr
ROMANIA: *1, Aleea Meseriasilor, Bloc C93, Etaj 2, Ap.16, Sector 6, 061647-Bucharest, ROMANIA*
Tel : ++4021 413 5902, Fax: ++4031 815 6441, ++4031 816 5216
ε-mail: romania@valiadis.gr -http:// www.ac-motors.eu

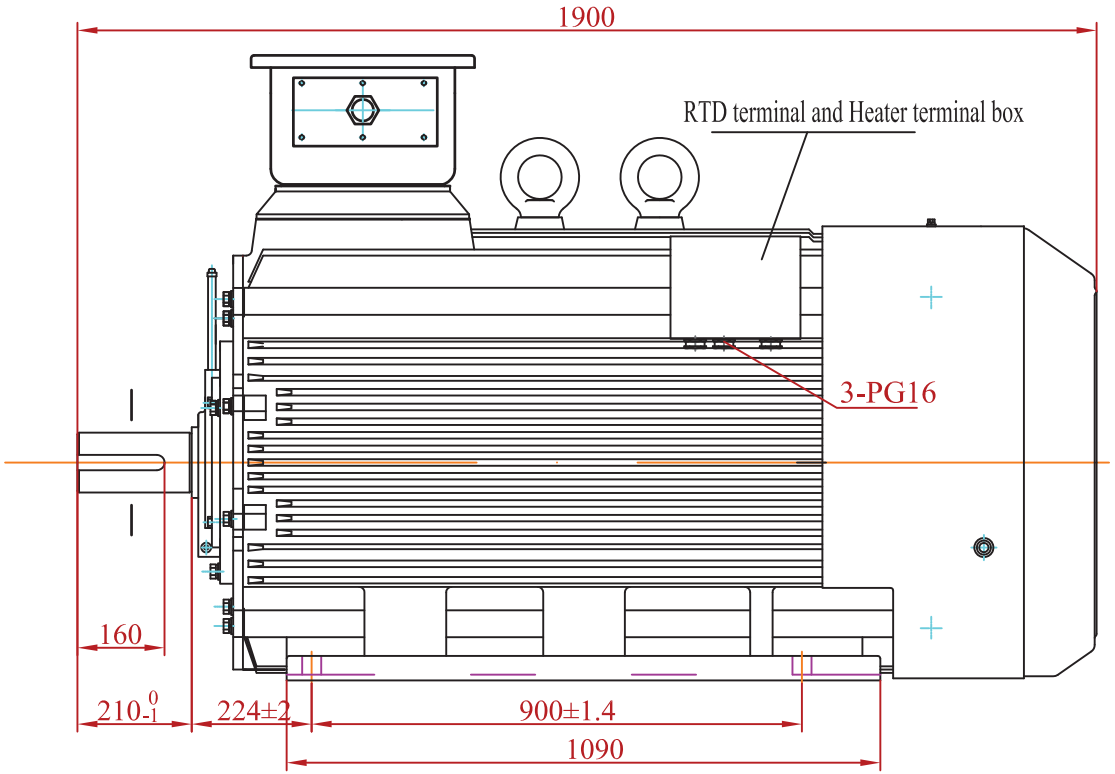

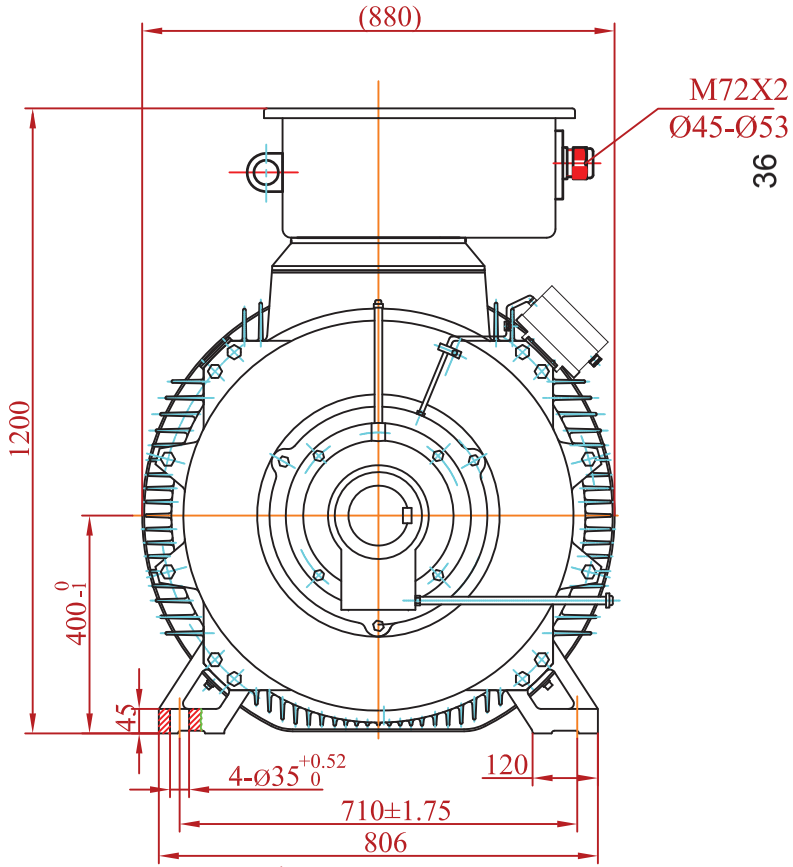

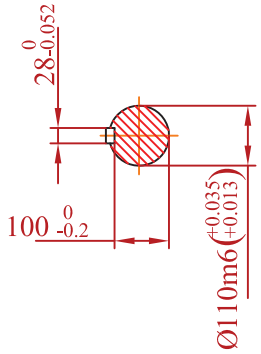

type	power (kW)	volt (V)	frequency (Hz)	Full load current (A)	Full load speed(r/min)	Full load Efficiency(%)	Full load Powerfactor	Max torque / rated torque	Locked current / rated current	Locked torque / rated torque	Weight (kg)
KHV400-4	450	6000	25-50	53	1485	95.2	0.85	2.0	6.5	0.8	3600

Technical requirements

1. The direction of rotation viewed from the shaft end could be clockwise or unclockwise.But couldn't be rotate to and fro or plug braking.
2. Protection IP65. IMB3
3. Insulation class F.
4. Cooling type IC411.
5. Bearing grease UnirexN2,shaft insulated
   Bearing type: Driving end 6326/C3 , Non driving end 6326/C3
6. Temperature thermistor for winding and bearing is Pt100.
7. Heater :AC/220V 2X100W.

				Date	Signature
			Designed by	07/02/12	
			Checked by		
			Examine by		
Change	Date	Name	SCALE		

VALIADIS
HELLENIC MOTORS

Motor Type : KHV400-4
Mounting : B3

Design Number :

Replaced from

Replace the

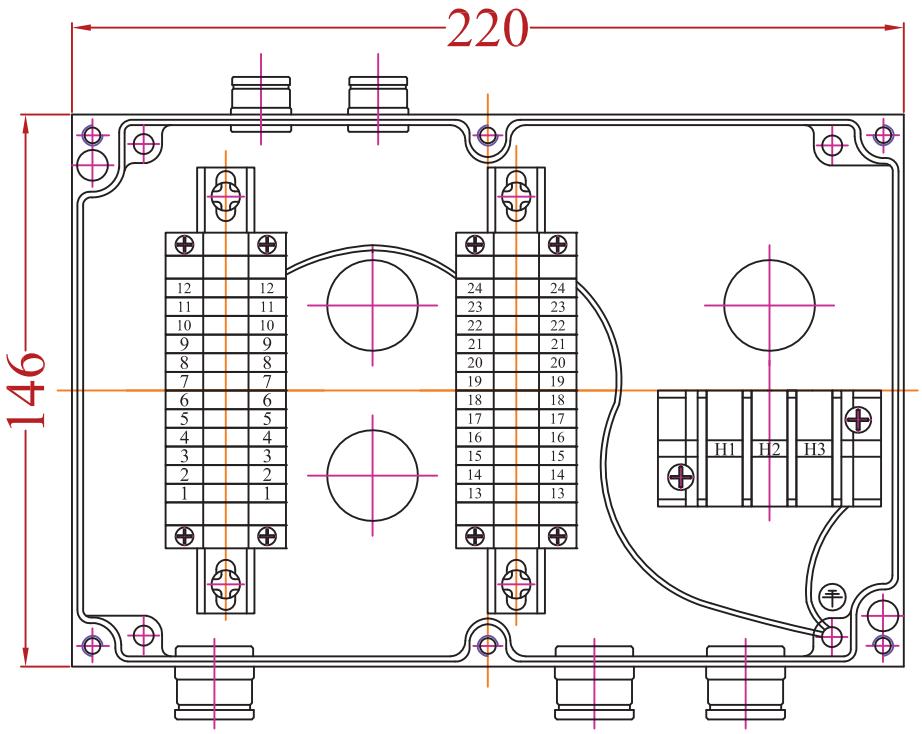

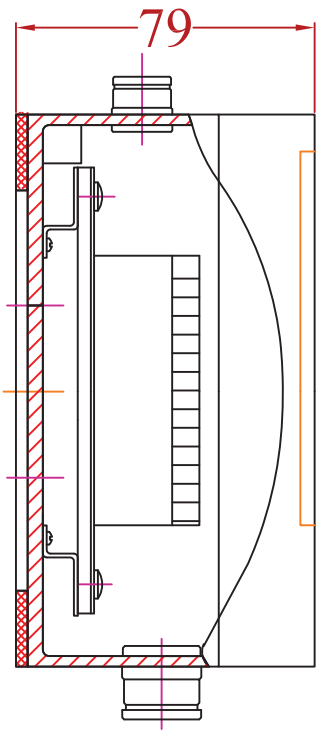

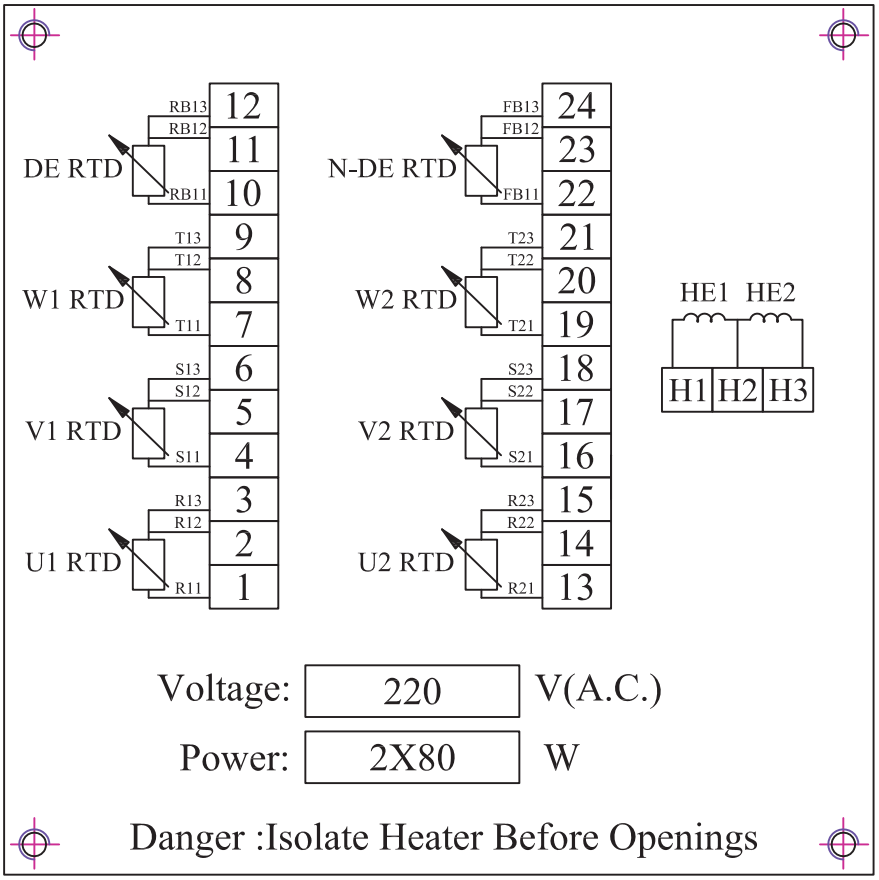

				Date	Signature	Weight :
			Designed by	24/04/12	St.Karageorgis	3 Kg
			Checked by			
			Examine by			
Change	Date	Name	SCALE 1:2			

VALIADIS
HELLENIC MOTORS

Heater and RTD
Terminal box
KHV 400-4 /6kV

Design Number :

Replaced from

Replace the

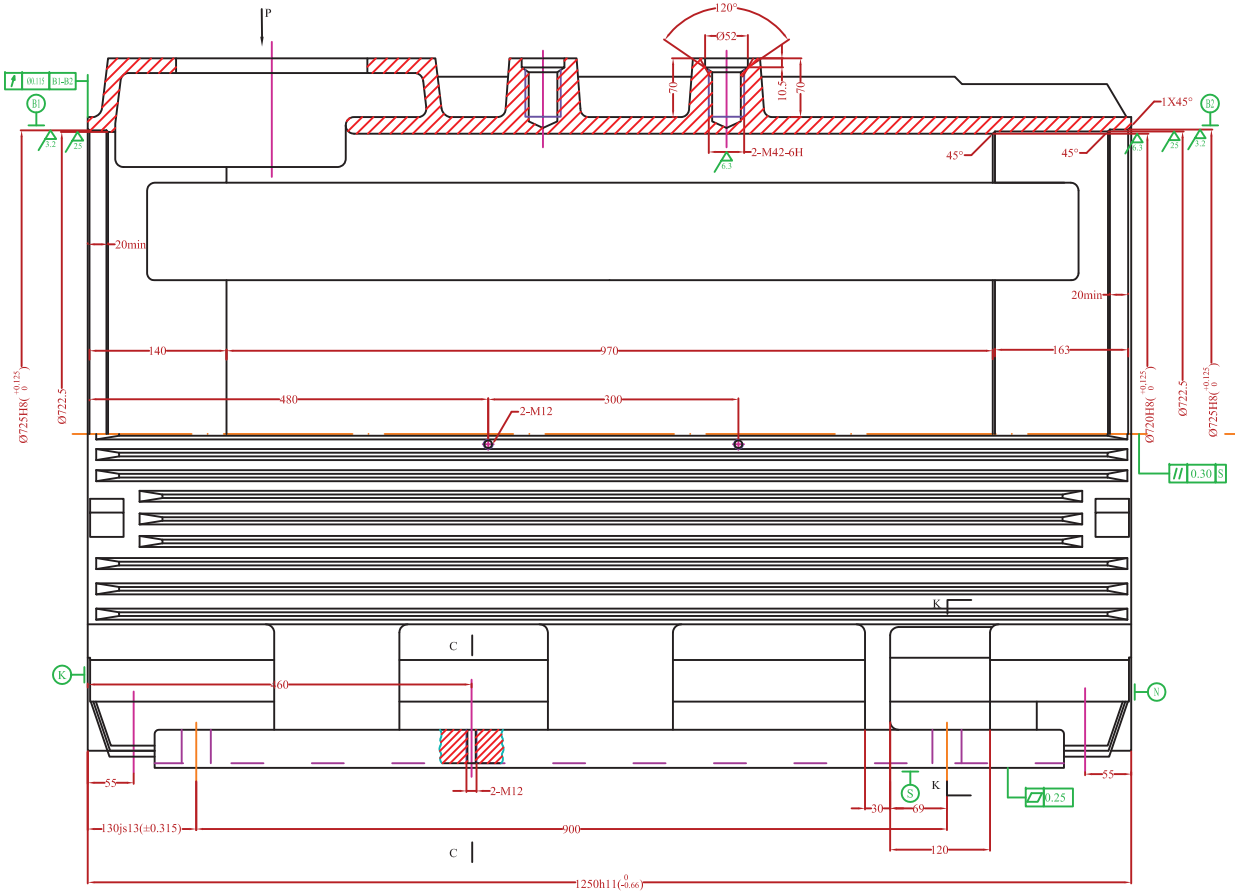

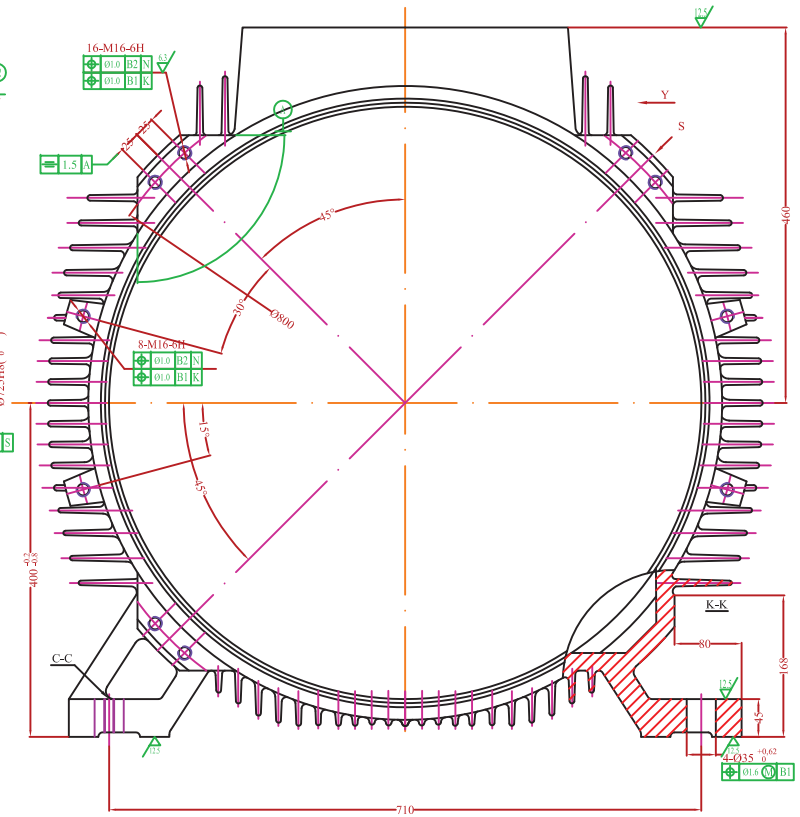

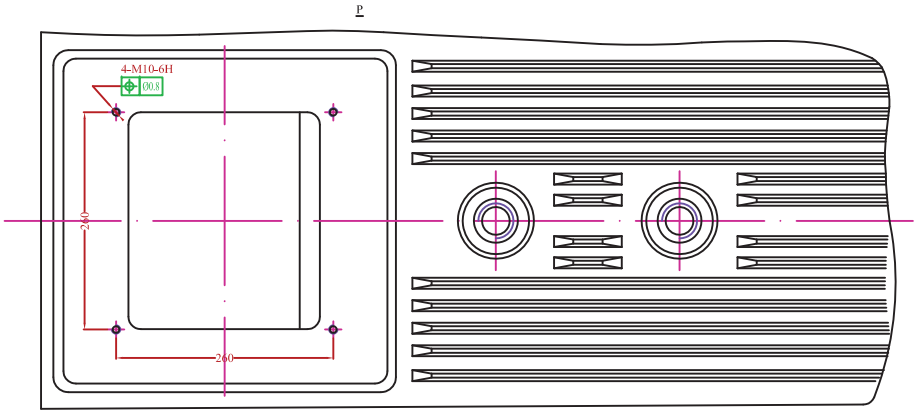

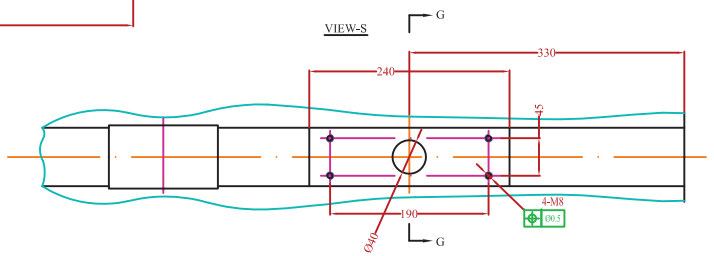

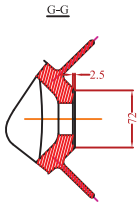

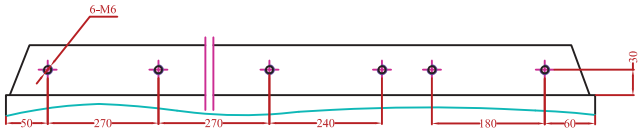

				Date	Signature
			Designed by	30/04/12	St.Karageorgis
			Checked by		
			Examine by		
Change	Date	Name	SCALE		

VALIADIS
HELLENIC MOTORS

Frame
Motor Type : KHV400-4
Mounting : B3

Design Number :

Replaced from

Replace the

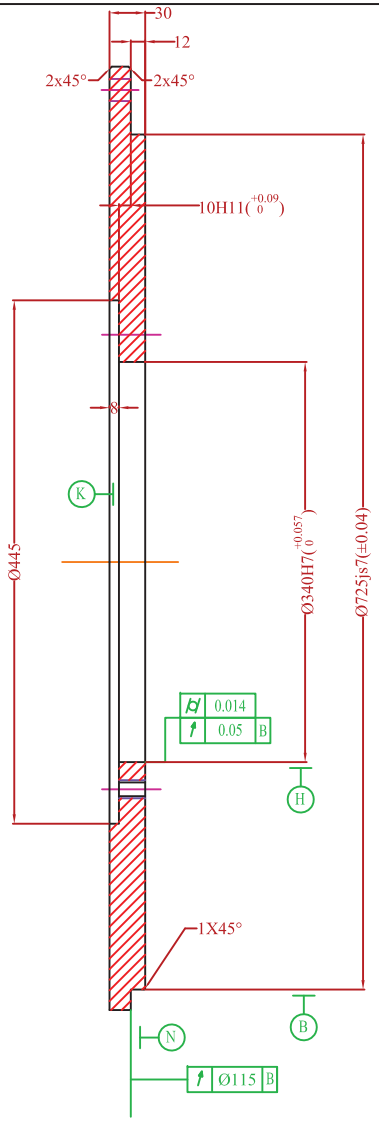

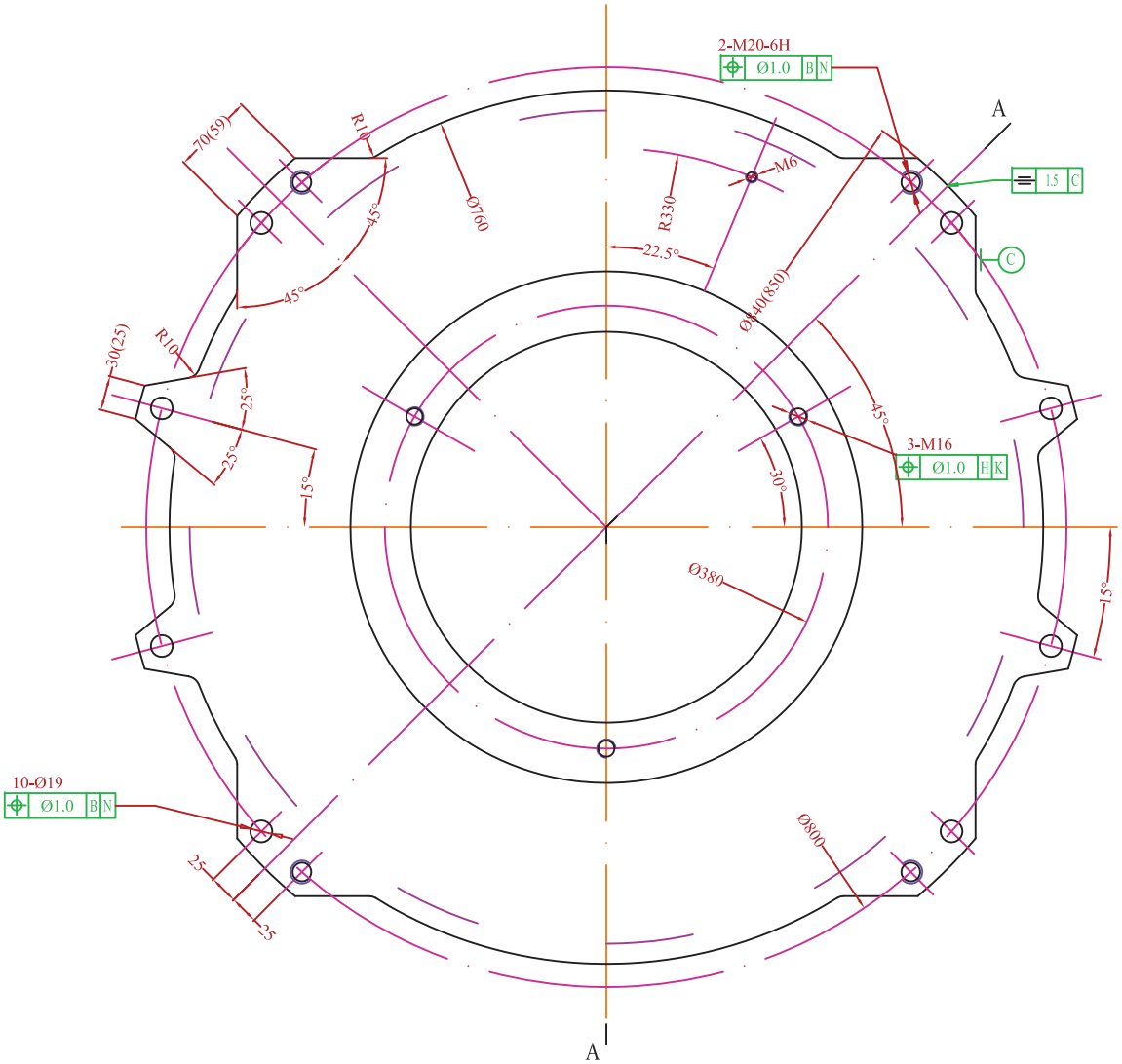

				Date	Signature	Weight :
			Designed by	07/05/12	St.Karageorgis	92 Kg
			Checked by			
			Examine by			
Change	Date	Name	SCALE			

VALIADIS
HELLENIC MOTORS

End Shield
Motor Type : KHV400-4

Design Number :

Replaced from

Replace the

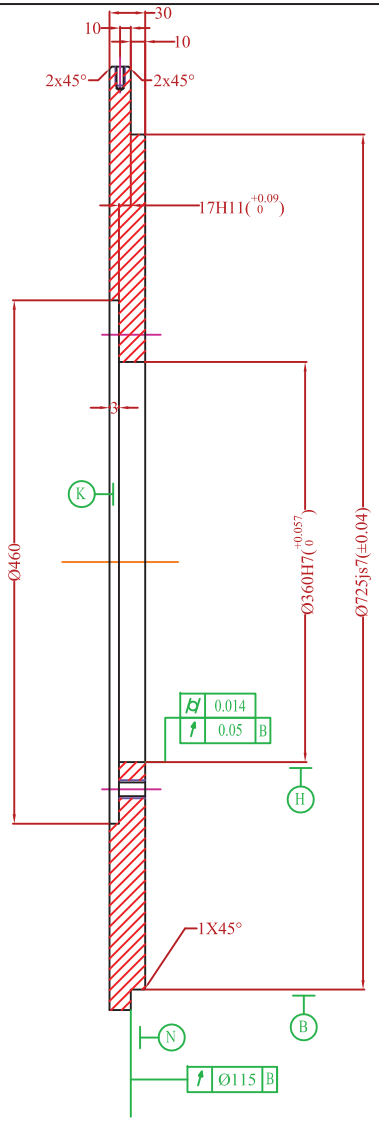

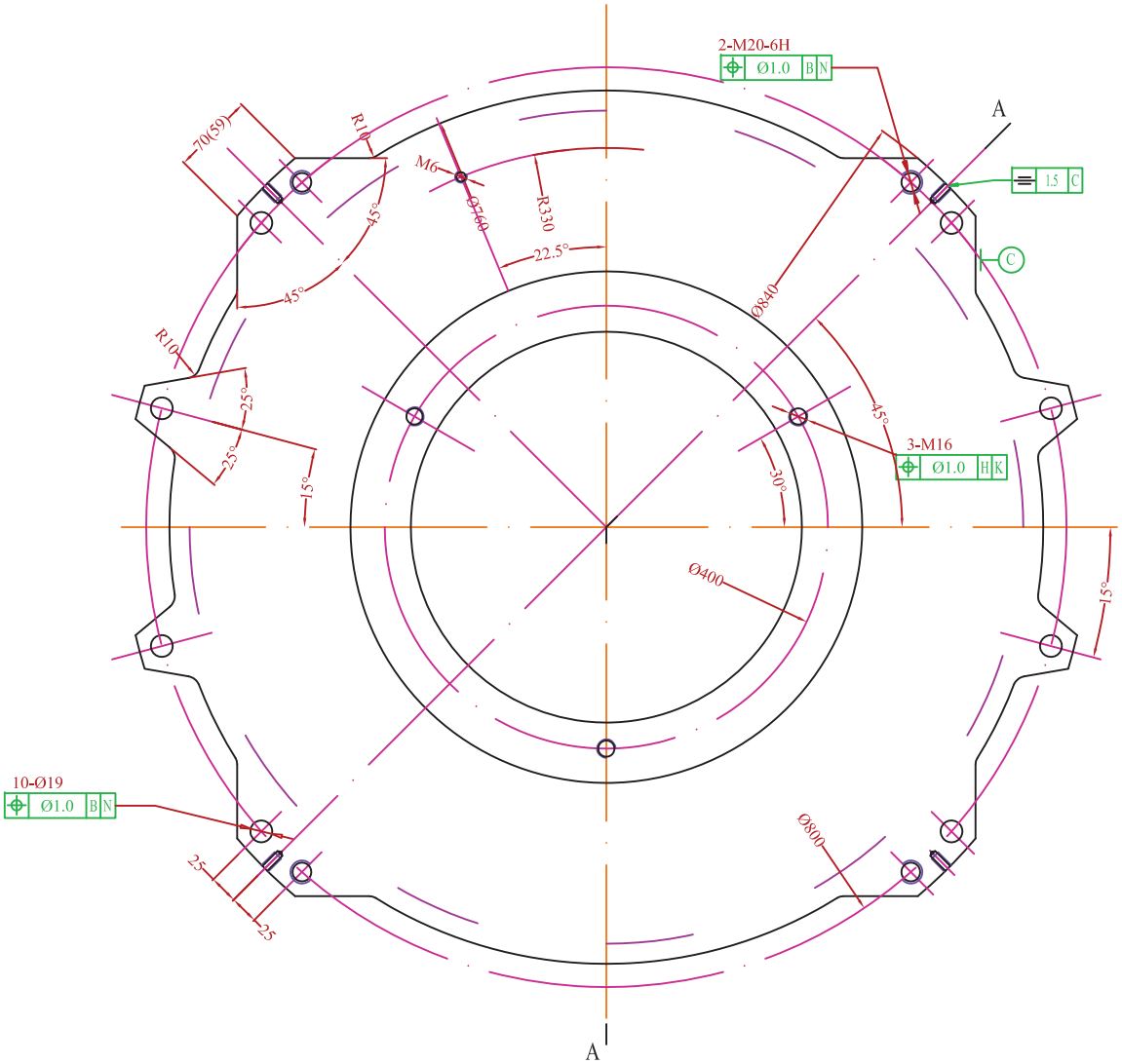

40

				Date	Signature	Weight :
			Designed by	07/05/12	St.Karageorgis	82 Kg
			Checked by			
			Examine by			
Change	Date	Name	SCALE			

VALIADIS
HELLENIC MOTORS

NDE-End Shield
Motor Type : KHV400-4

Design Number :

Replaced from

Replace the

VIEW -D

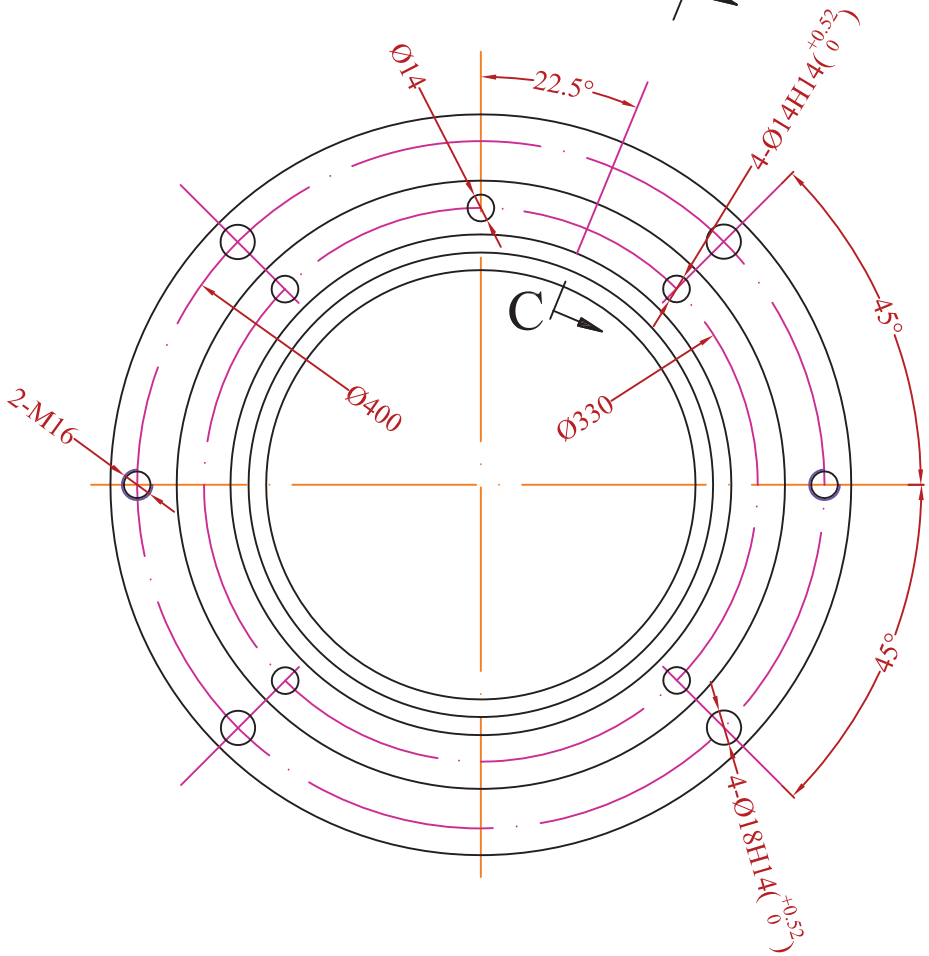

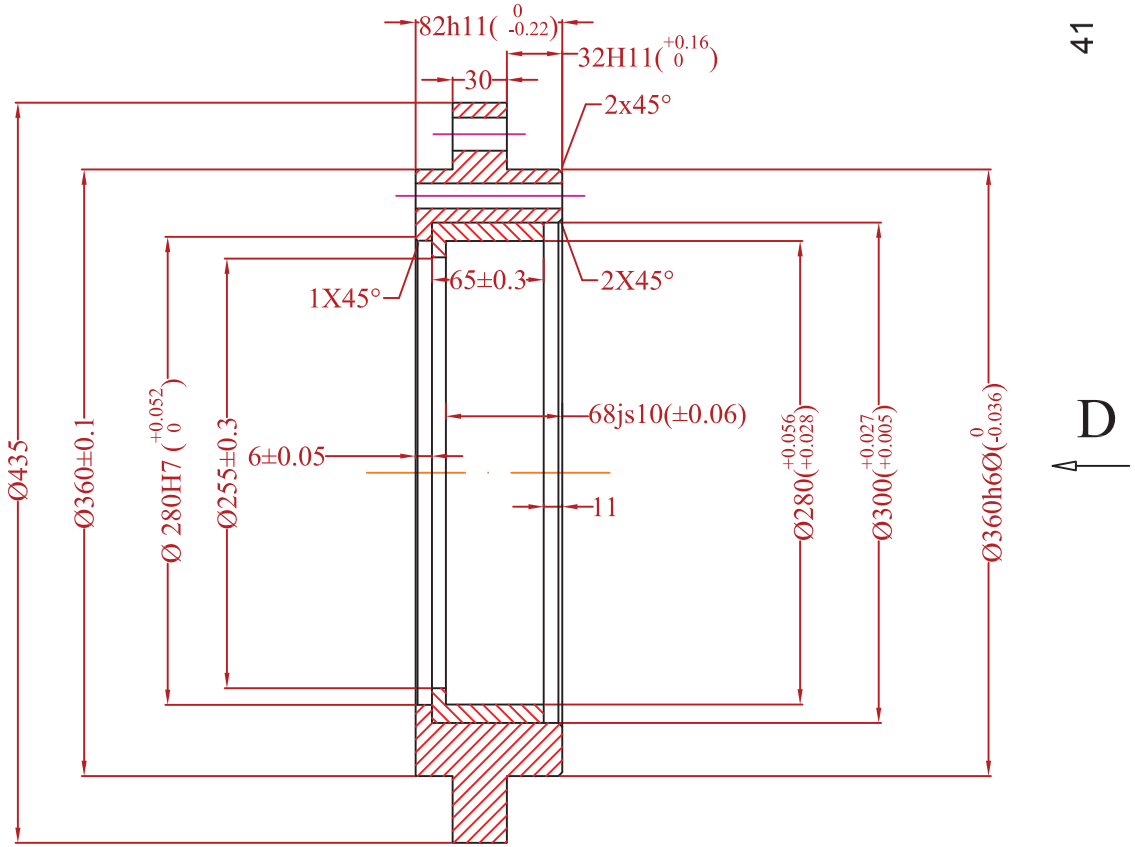

C-C

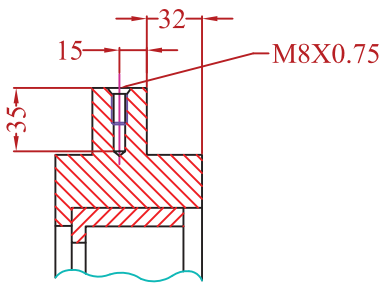

Change	Date	Name

	Date	Signature	Weight :
Designed by	07/05/12	St. Karageorgis	36 Kg
Checked by			
Examine by			

SCALE

VALIADIS
HELLENIC MOTORS

INSULATION BEARING SLEEVE
Motor Type:KHV400-4

Design Number :

Replaced from

Replace the

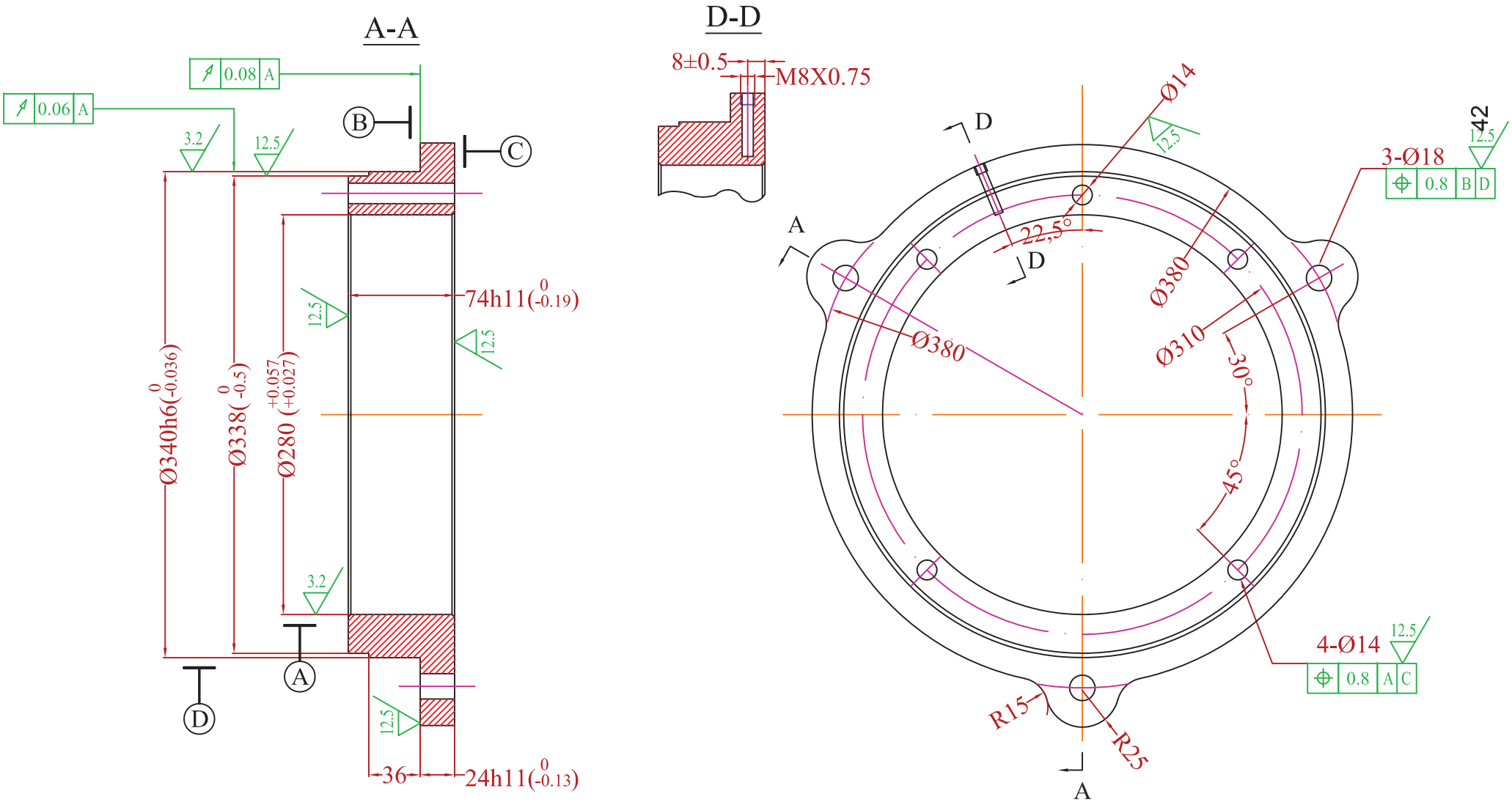

				Date	Signature	Weight :
			Designed by	08/05/12	St.Karageorgis	20 Kg
			Checked by			
			Examine by			
Change	Date	Name	SCALE			

VALIADIS
HELLENIC MOTORS

BEARING SLEEVE
Motor Type :KHV400-4

Design Number :

Replaced from

Replace the

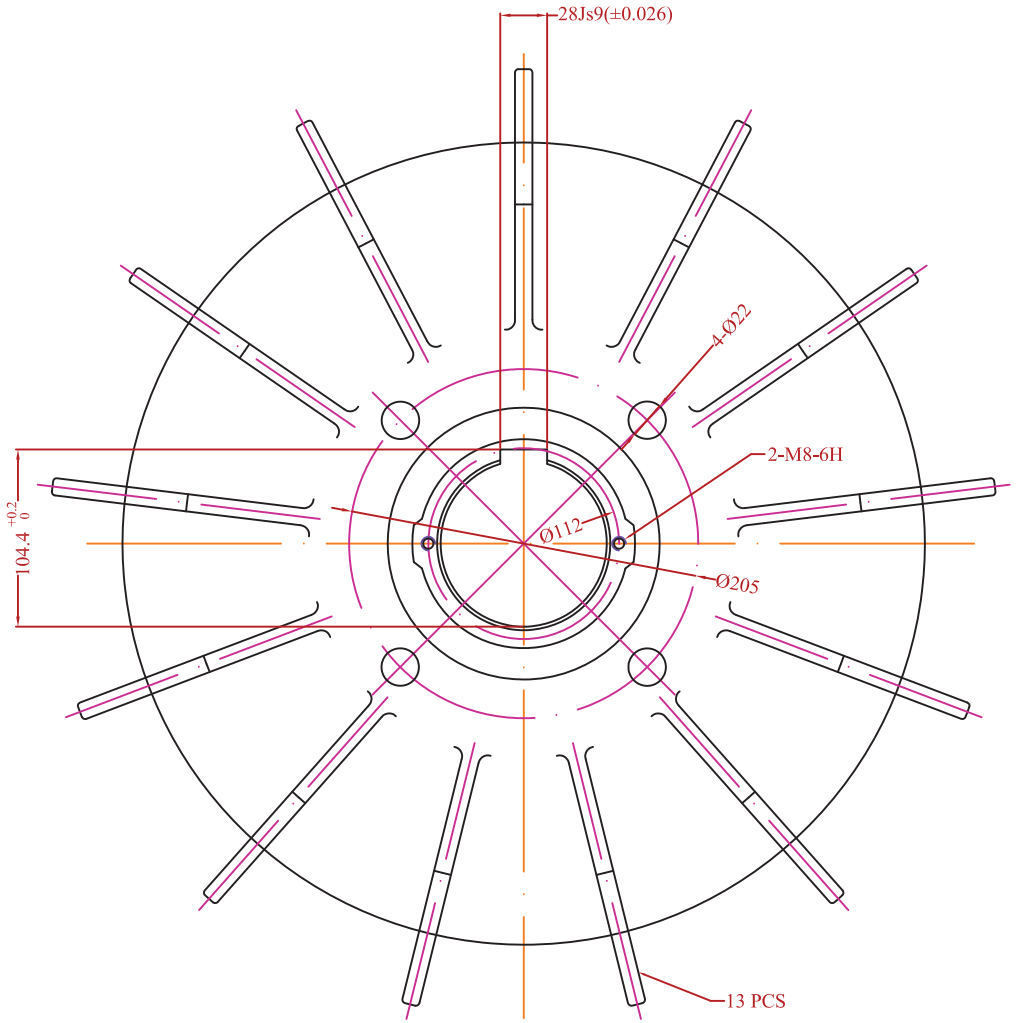

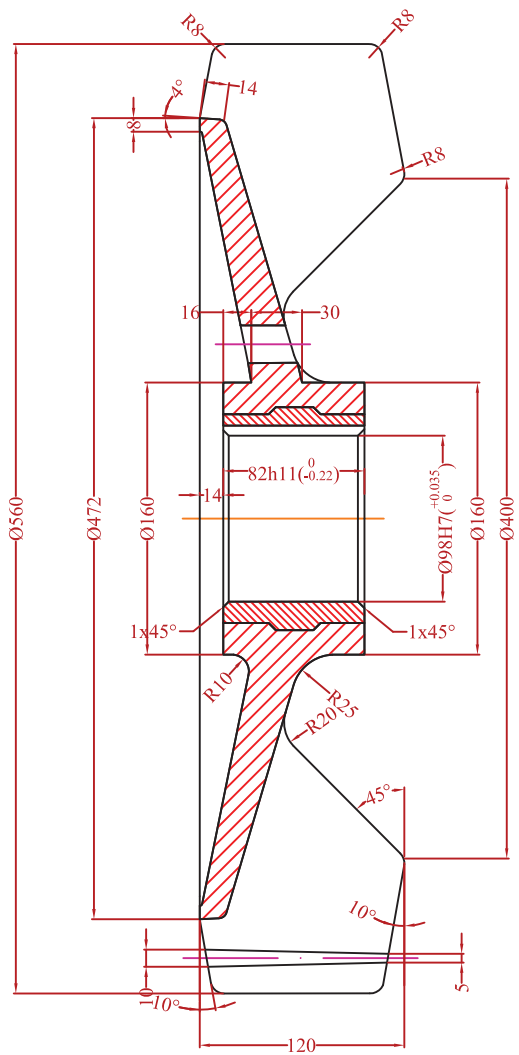

43

				Date	Signature		
			Designed by	07/05/12	St.Karageorgis		VALIADIS HELLENIC MOTORS
			Checked by				
			Examine by				
			SCALE				Design Number :
							Replaced from
							Replace the
Change	Date	Name					

Fan

Motor Type:KHV 400-4

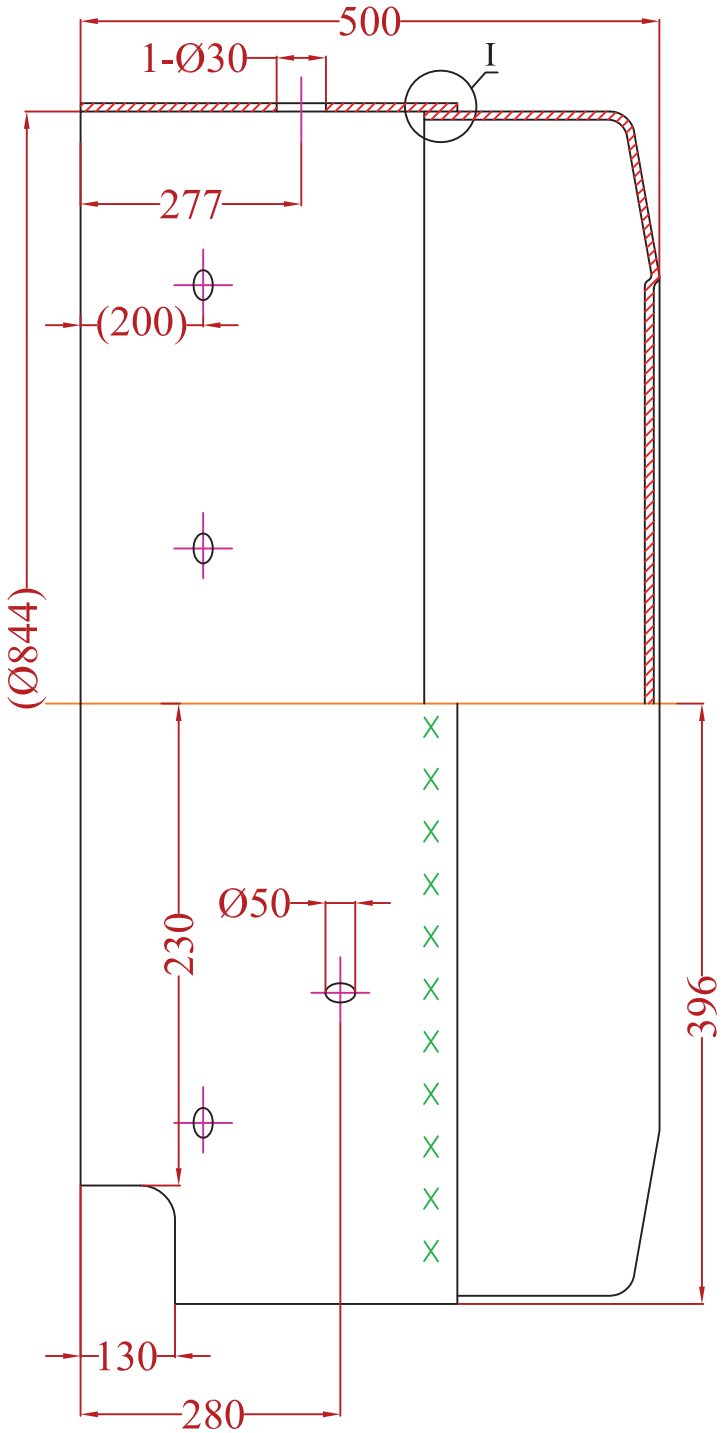

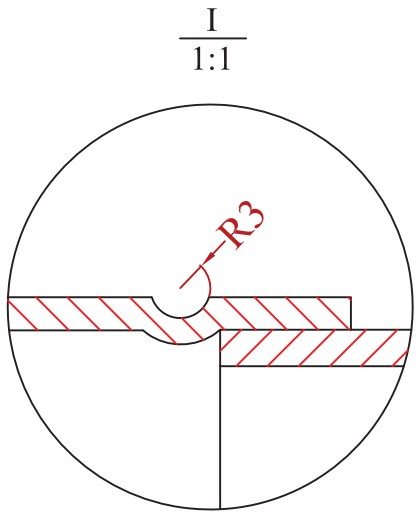

44

				Date	Signature
			Designed by	10/05/12	St.Karageorgis
			Checked by		
			Examine by		
Change	Date	Name	SCALE		

VALIADIS
HELLENIC MOTORS

Fan Cover
Motor Type : KHV400-4

Design Number :

Replaced from

Replace the

MOTOR TYPE : KHV450-4
MOUNTING : B3

VALIADIS S.A.

Quality Assurance Certificate EN ISO 9001:2008

KHV 450-4 / 6000V / 630KW No:201108728

Test Results Data

Nameplate data

Type	KHV450-4	Cos φ	0.85
Rated voltage	6000 V	Connection	Y
Rated current	73 A	Duty	S1
Rated power	630 KW	Ins .Class	F
Rated speed	1485 r/min	Pro. Class	IP65
Efficiency	95.5 %	Serial No.	201108728
Frequency	50 Hz		

No-load test **At rated voltage Un**

No load loss	18532.00 (W)	**No load current**	21.64 (A)
Machine loss	7228.00 (W)	**Core loss**	10971.00 (W)
Degrees of unbalance in a three phase system (current)			1.60 (%)

Temperature-rise test **Running at rated frequency**

Voltage	6006.0 (V)	**Current**	73.02 (A)
Power	669800.0 (W)	**Temperature – rise Δ θ**	73.55 (K)
Stator temperature	55.6 (°C)	**Bearing temperature**	82.1 (°C)

Load performance

Load	U_N (V)	f(Hz)	P1(W)	I1(A)	n(r/min)	T(N*m)	Cos φ	Eff (%)
125%	6000	50	826194.0	89.70	1485.1	5063.4	0.886	95.32
100%	6000	50	661701.0	71.96	1487.3	4044.7	0.885	95.21
75%	6000	50	498739.0	55.70	1490.1	3028.0	0.862	94.74
50%	6000	50	337259.0	40.90	1493.3	2014.3	0.793	93.40
25%	6000	50	177210.0	27.57	1497.0	1004.6	0.619	88.88

Temperature-rise at rated voltage and frequency and full-load current 71.43 (K)

ATHENS : 18, Gr. Labraki Str., 141 23 Likovrisi Tel : +30210-2817217, Fax : +30210-2814277
THESSALONIKI : INDUSTRIAL ARE OF SINDOS., O.T. 48B, 15η STREET, 570 22
Tel :+302310–796646, Fax :+302310–796645
e-mail : valiadis@valiadis.gr – http : //www.valiadis.gr
ROMANIA: 1, Aleea Meseriasilor, Bloc C93, Etaj 2, Ap.16, Sector 6, 061647-Bucharest, ROMANIA
Tel : ++4021 413 5902, Fax: ++4031 815 6441, ++4031 816 5216
ε-mail: romania@valiadis.gr -http:// www.ac-motors.eu

Locked test

Rated current	73	(A)	**Starting current**	507.05	(A)
Starting torque	8529.50	(N*m)	**Rated torque**	4051	(N*m)
Locked/Rated current	6.95		**Locked / Rated torque**	2.11	

Noise and Vibration **Running at rated voltage and frequency**

Noise (Measured at 1.00 m far away from the motor)(sound power level (A))	106.4 (dB)
Vibration	1.30 (mm/S)

Inspector		**Check**		**Date**	

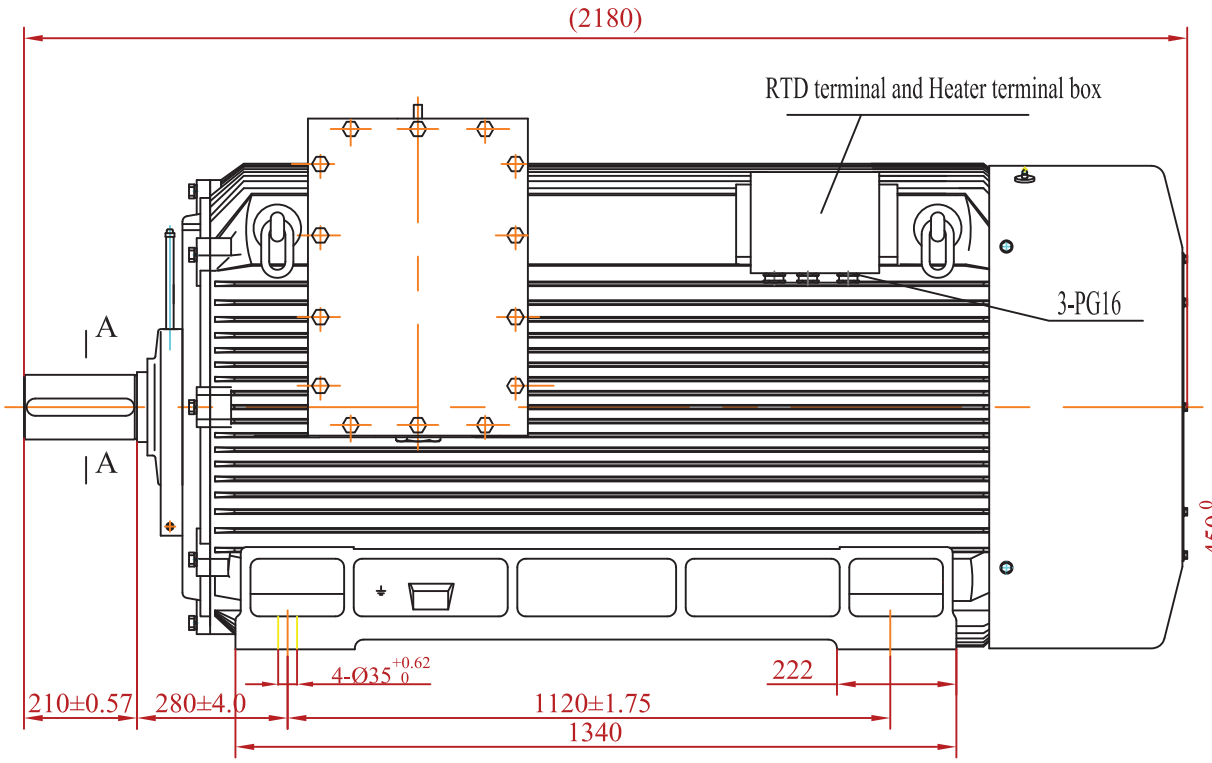

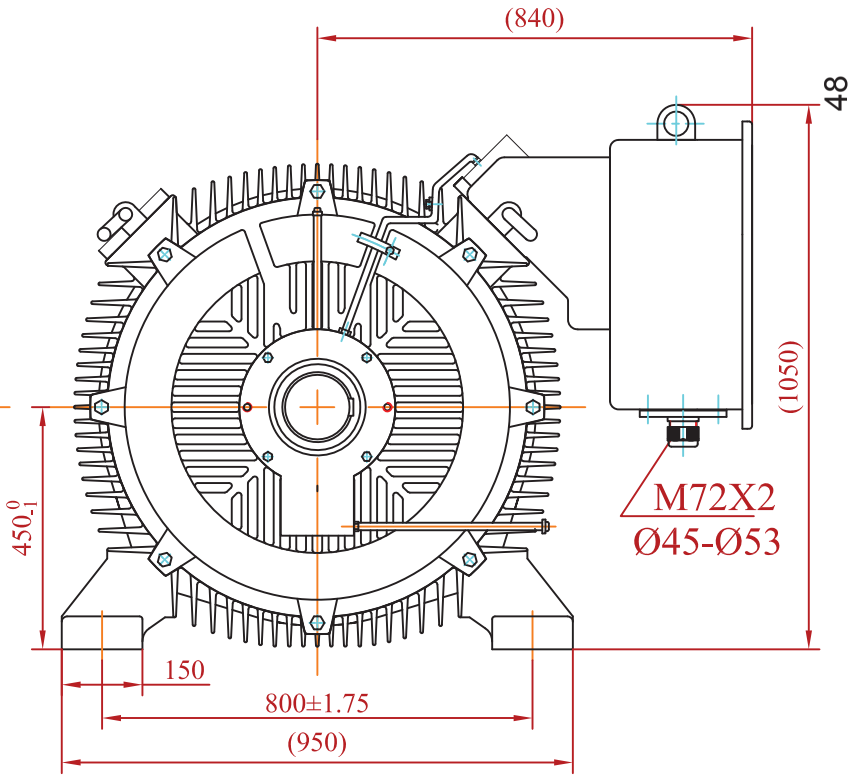

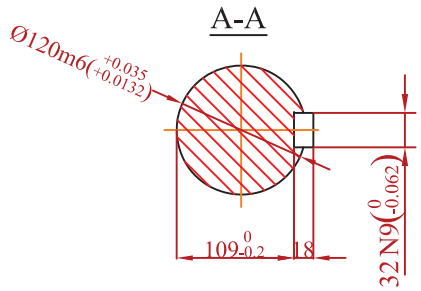

Type	Power (kW)	Voltage (V)	frequency (HZ)	Full load				Breakdown torque / rated torque	Locked rotor current / rated current	Locked torque / rated torque	IP	Weight (kg)
				current (A)	speed (r/min)	Efficiency(%)	Power factor					
KHV-450-4	630	6000	25-50	73	1485	95.5	0.86	2.0	6.5	0.8	IP65	4200

Technical requirements

1. The direction of rotation viewed from the shaft end could be clockwise or unclockwise.But couldn't be rotate to and fro or plug braking.
2. Protection IP65. IMB3
3. Insulation class F.
4. Cooling type IC411.
5. Bearing grease UnirexN2,shaft insulated
   Bearing type:Driving end NU226/C3 6226/C3, Non driving end NU226/C3
6. Temperature thermistor for winding and bearing is Pt100.
7. Heater :AC/220V 2X130W.

				Date	Signature
			Designed by		
			Checked by		
			Examine by		
Change	Date	Name	SCALE		

VALIADIS
HELLENIC MOTORS

Motor Type : KHV450-4
Mounting : B3

Design Number :

Replaced from

Replace the

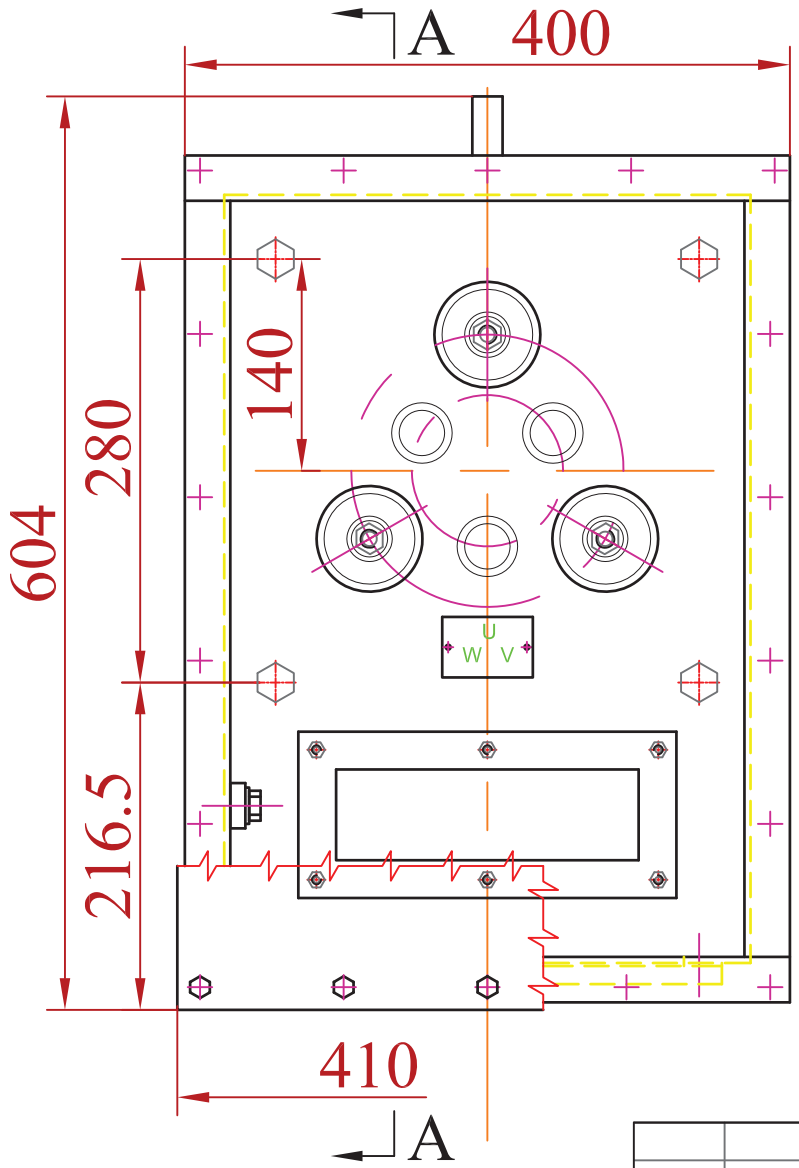

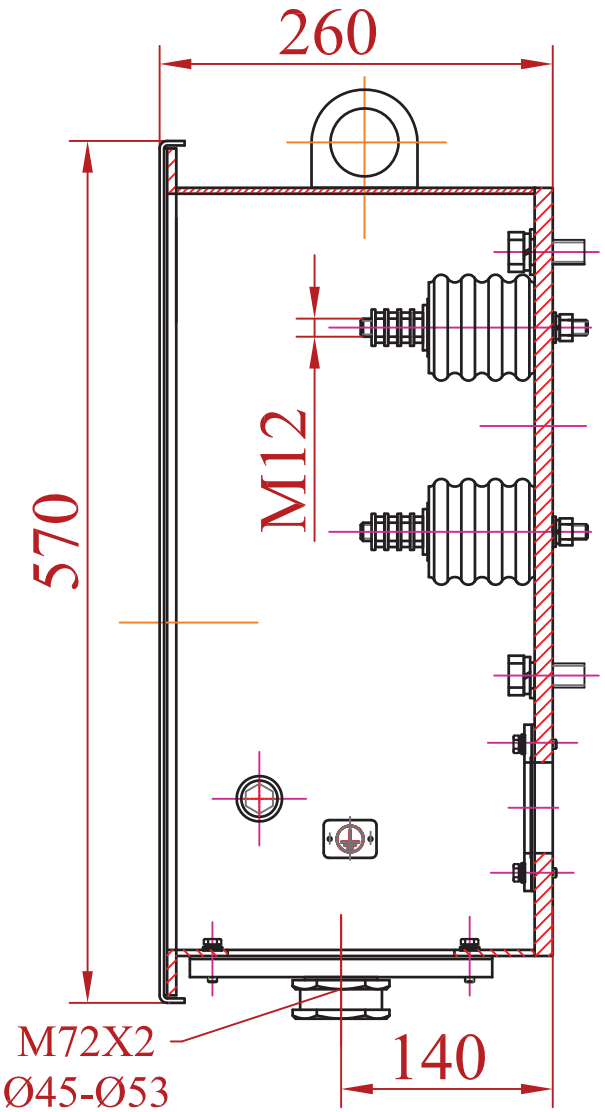

49

				Date	Signature	Weight :
			Designed by	10/05/12	St.Karageorgis	65 kg
			Checked by			
			Examine by			
Change	Date	Name	SCALE 1:5	MAIN TERMINAL BOX KHV450-4		

VALIADIS
HELLENIC MOTORS

Design Number :

Replaced from

Replace the

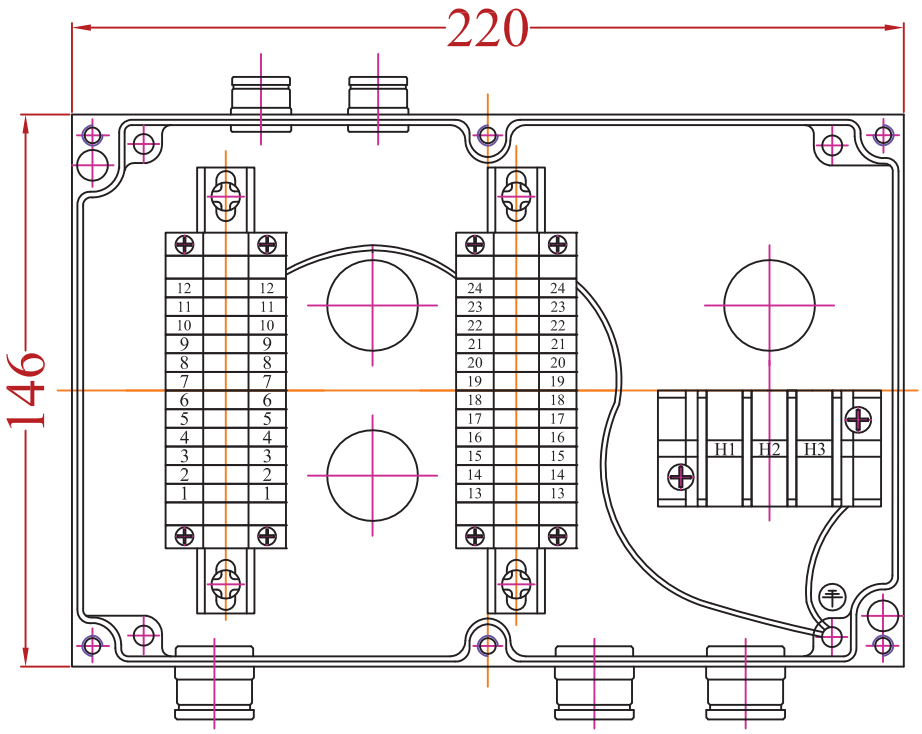

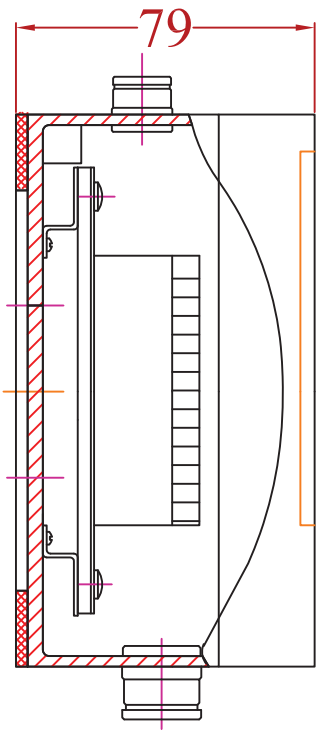

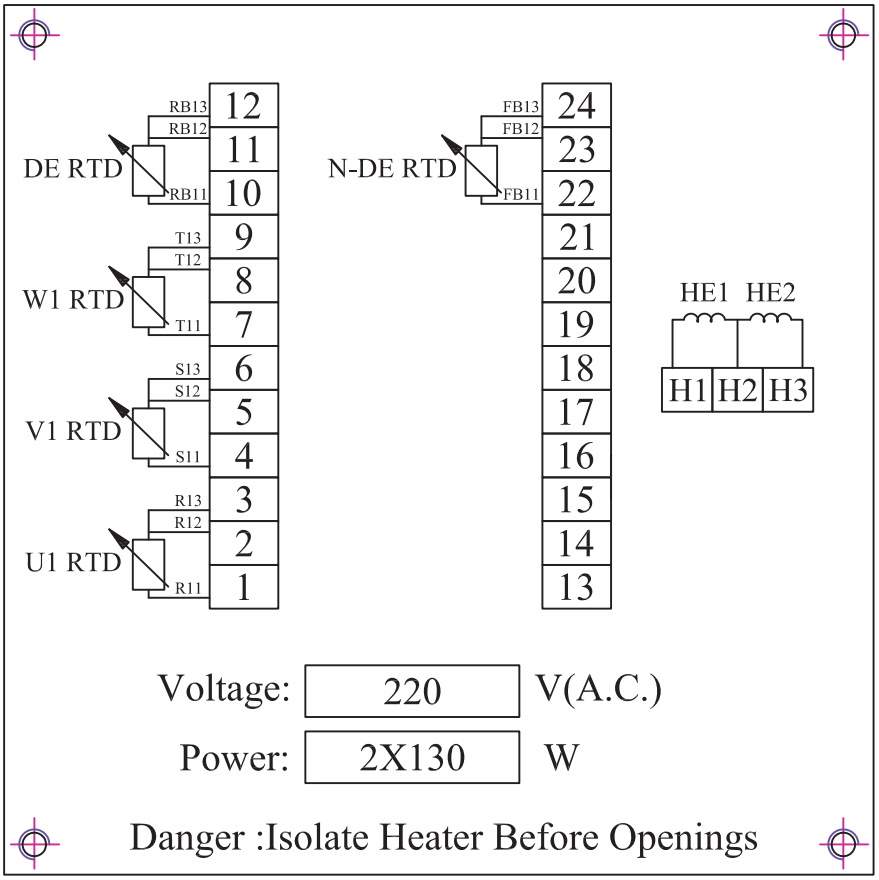

				Date	Signature	Weight :
			Designed by	10/05/12	St.Karageorgis	3 Kg
			Checked by			
			Examine by			
Change	Date	Name	SCALE 1:2	Heater and RTD Terminal box KHV 450-4 /6kV		

VALIADIS
HELLENIC MOTORS

Design Number :

Replaced from

Replace the

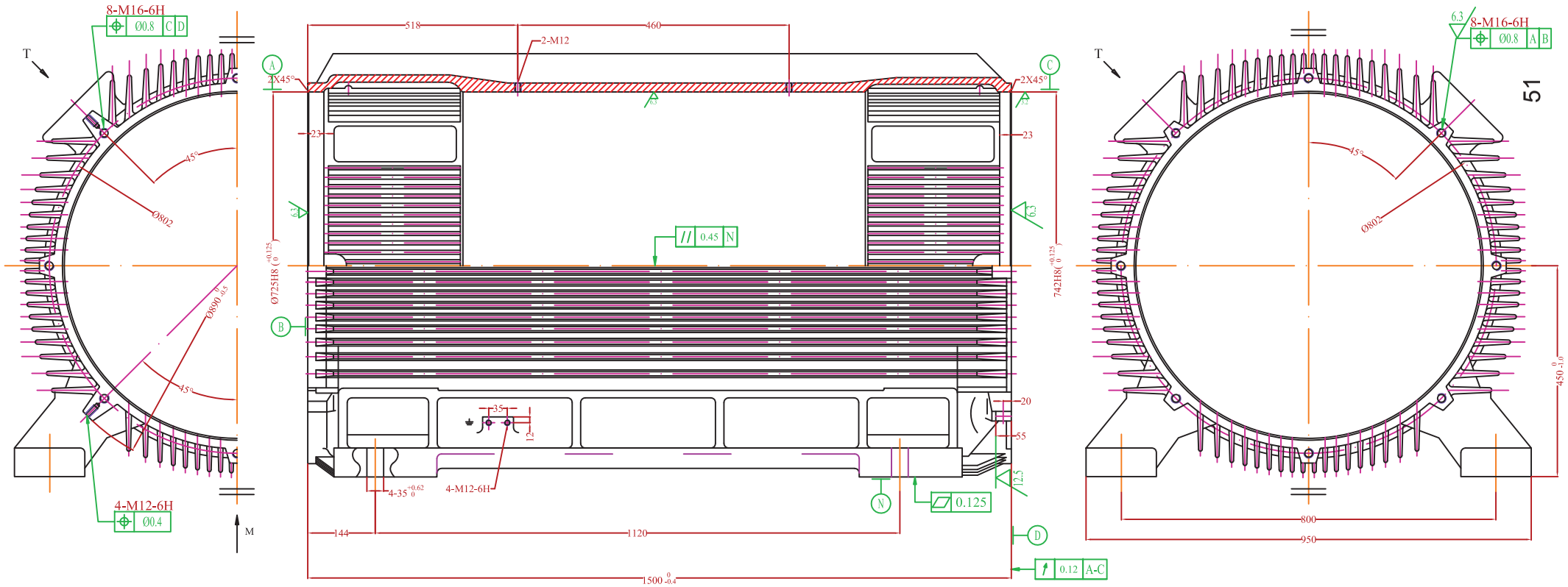

VIEW-T

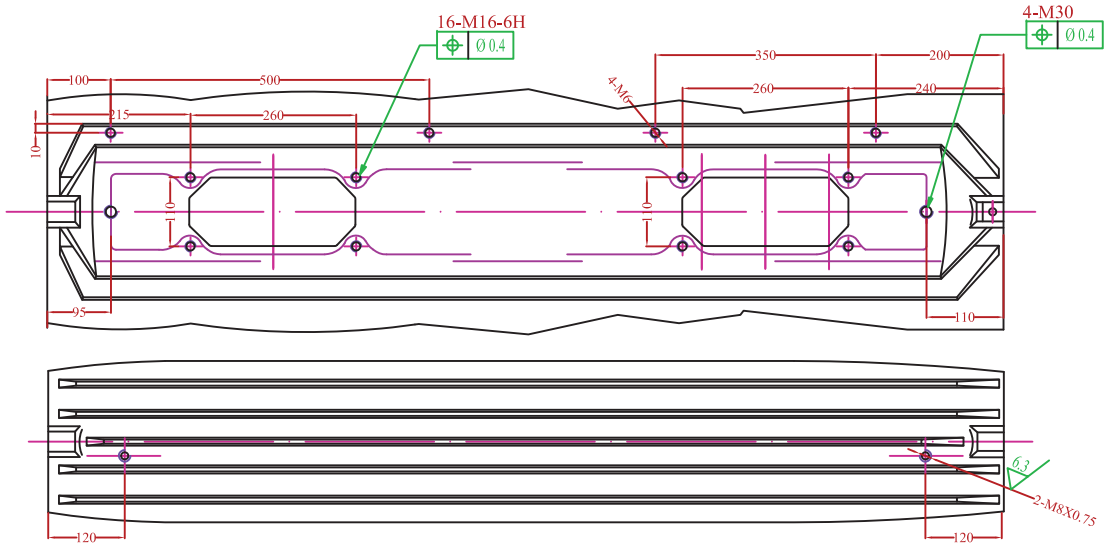

				Date	Signature	Weight :
			Designed by	14/05/12	St.Karageorgis	1050 Kg
			Checked by			
			Examine by			
			SCALE	FRAME Motor Type : KHV450-4 Mounting : B3		Design Number :
						Replaced from
Change	Date	Name				Replace the

VALIADIS
HELLENIC MOTORS

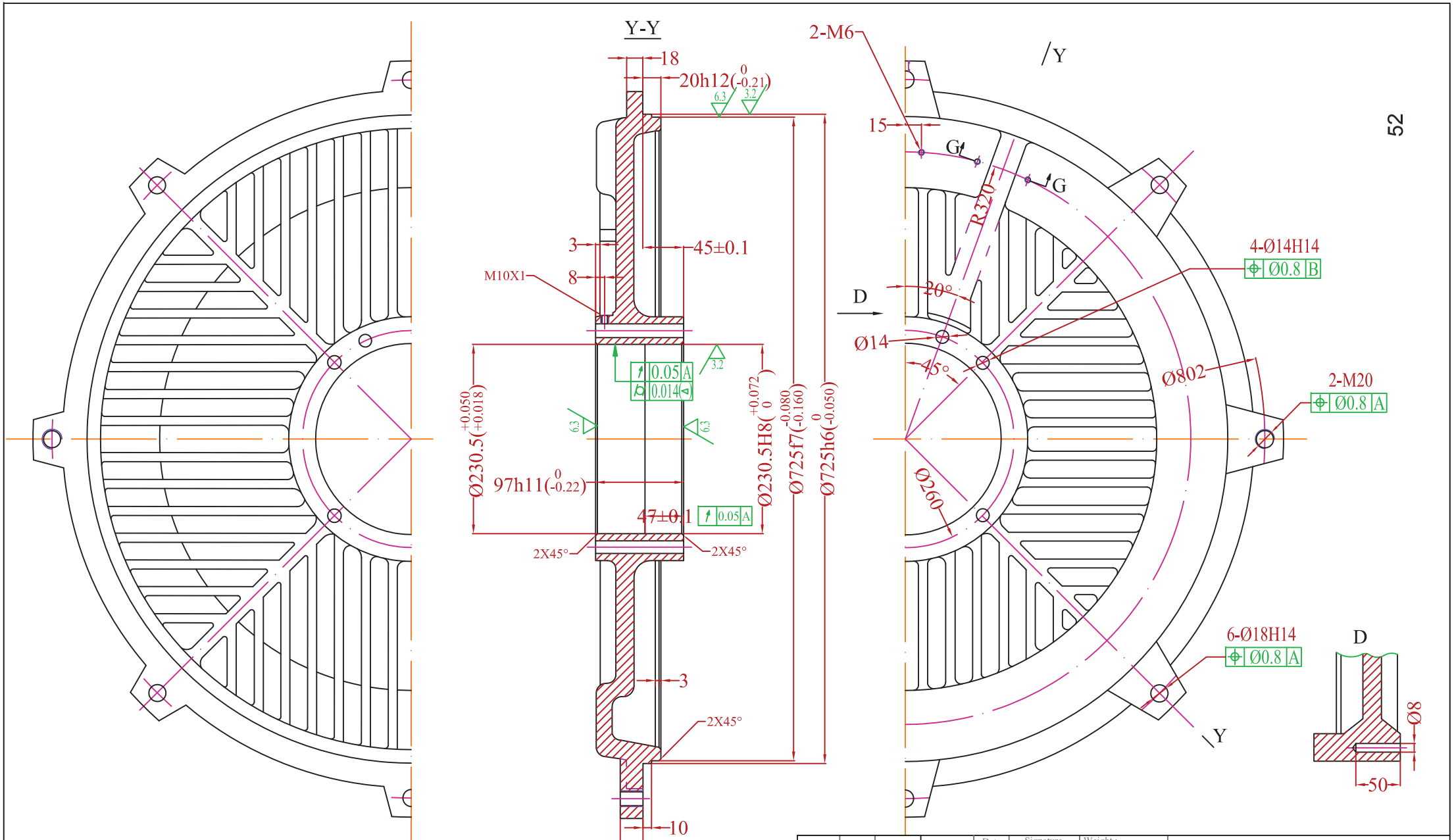

				Date	Signature	Weight :
			Designed by	30/05/12	St.Karageorgis	125 Kg
			Checked by			
			Examine by			
Change	Date	Name	SCALE			

VALIADIS
HELLENIC MOTORS

Front Bearing Shield
Motor Type :KHV450-4

Design Number :

Replaced from

Replace the

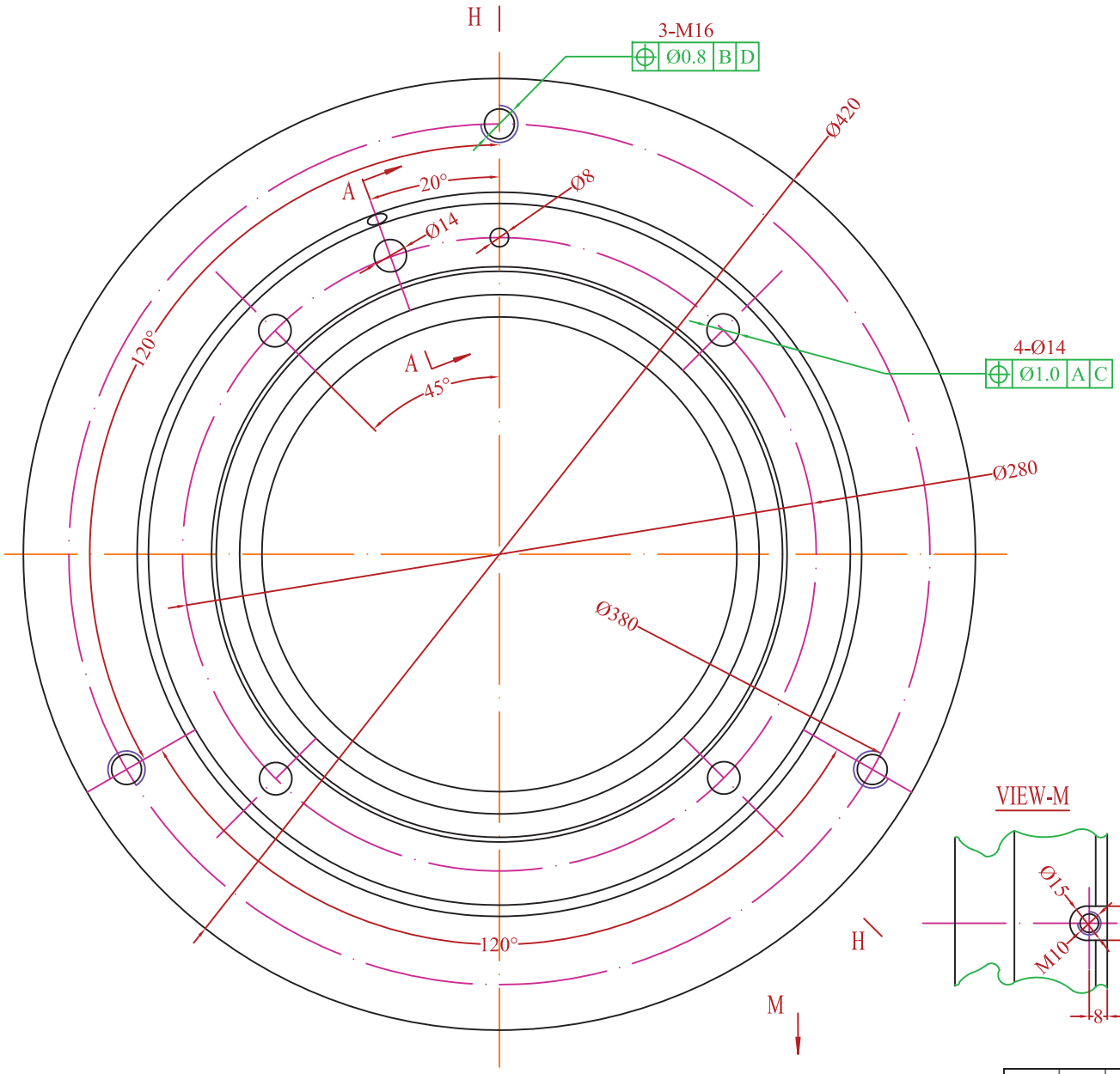

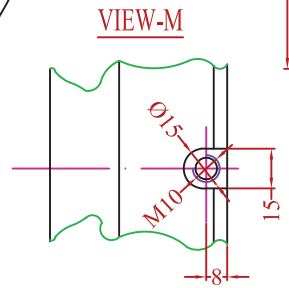

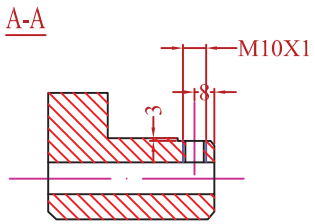

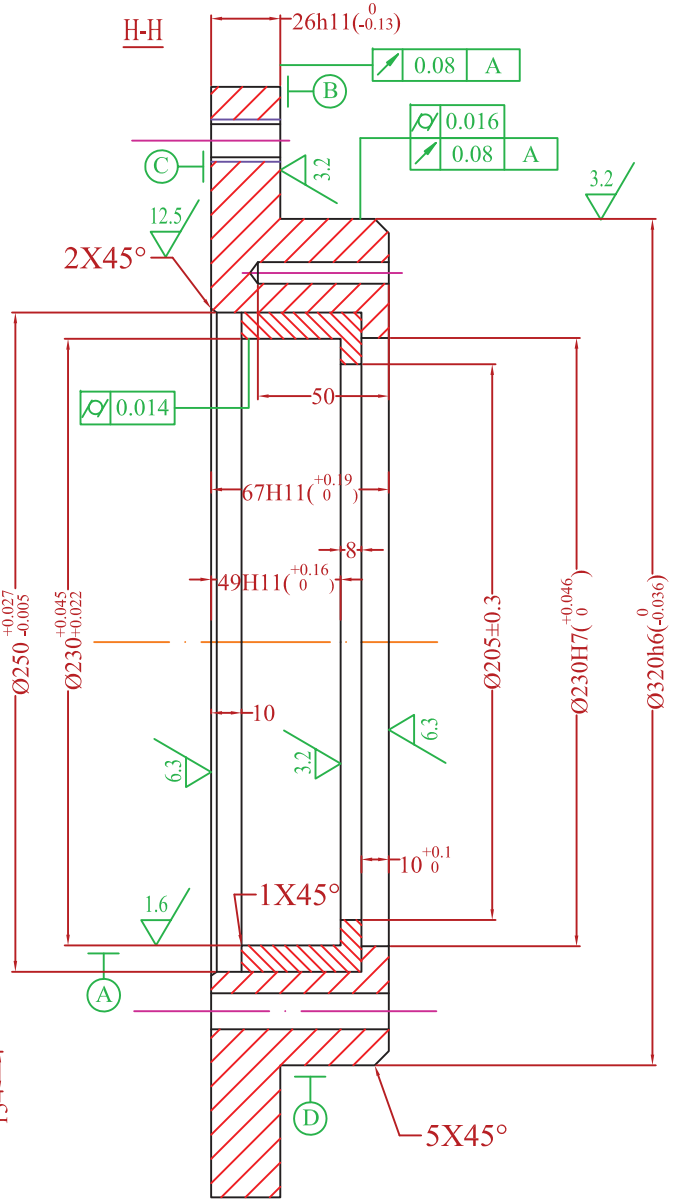

				Date	Signature		
			Designed by	01/06/12	St.Karageorgis		VALIADIS HELLENIC MOTORS
			Checked by				
			Examine by				
			SCALE	INSULATION BEARING SLEEVE Motor Type :KHV450-4			Design Number :
							Replaced from
Change	Date	Name					Replace the

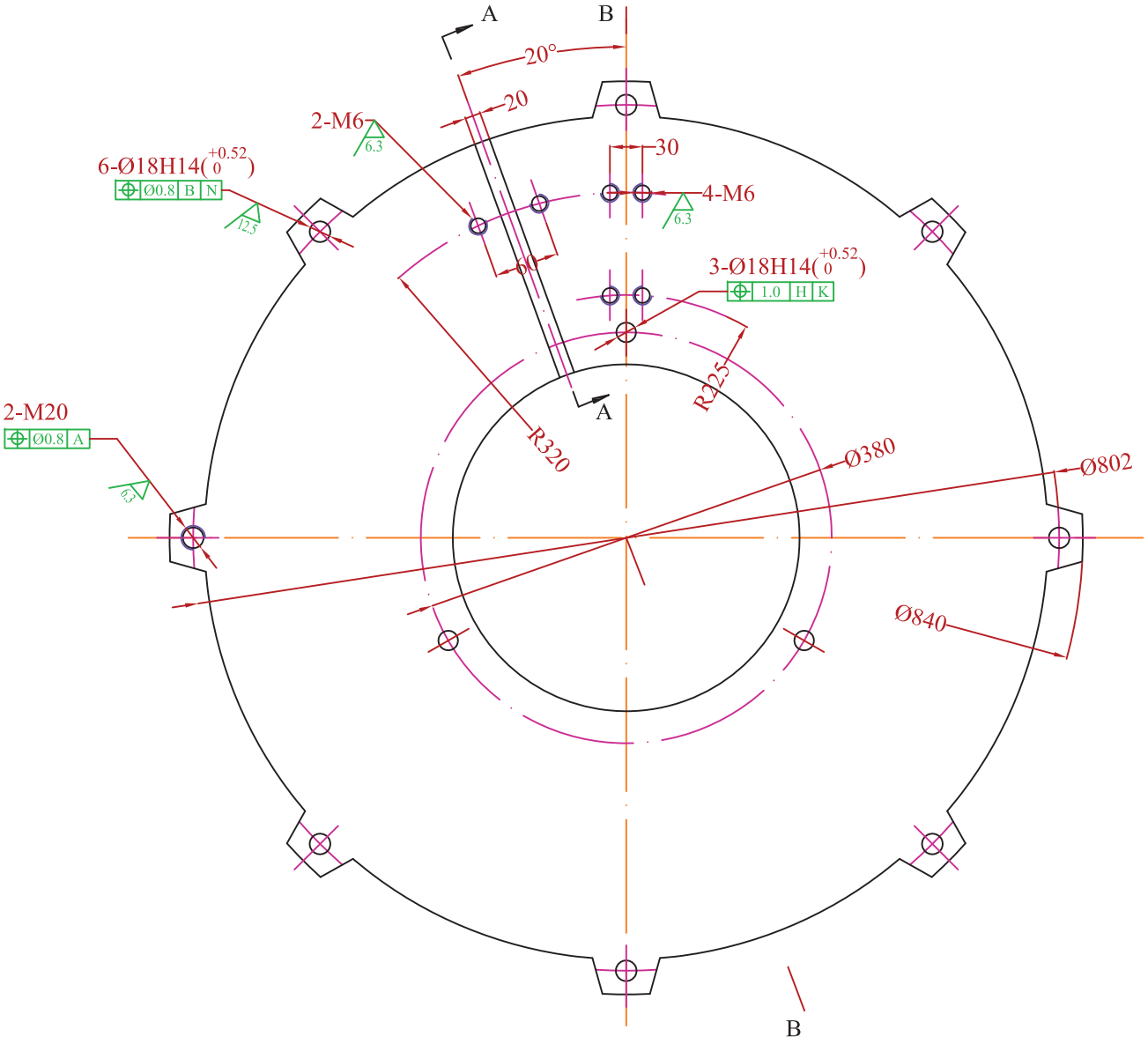

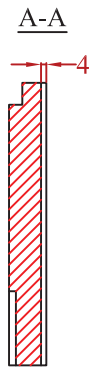

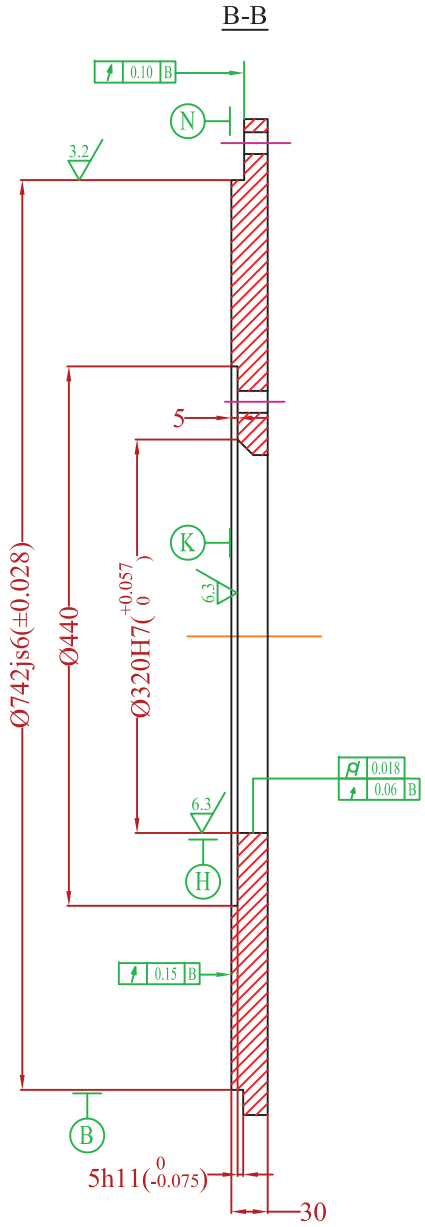

54

				Date	Signature	Weight : 105 Kg	VALIADIS HELLENIC MOTORS
			Designed by	31/05/12	St.Karageorgis		
			Checked by				
			Examine by				
Change	Date	Name	SCALE	End Shield Motor Type : KHV450-4			Design Number : Replaced from Replace the

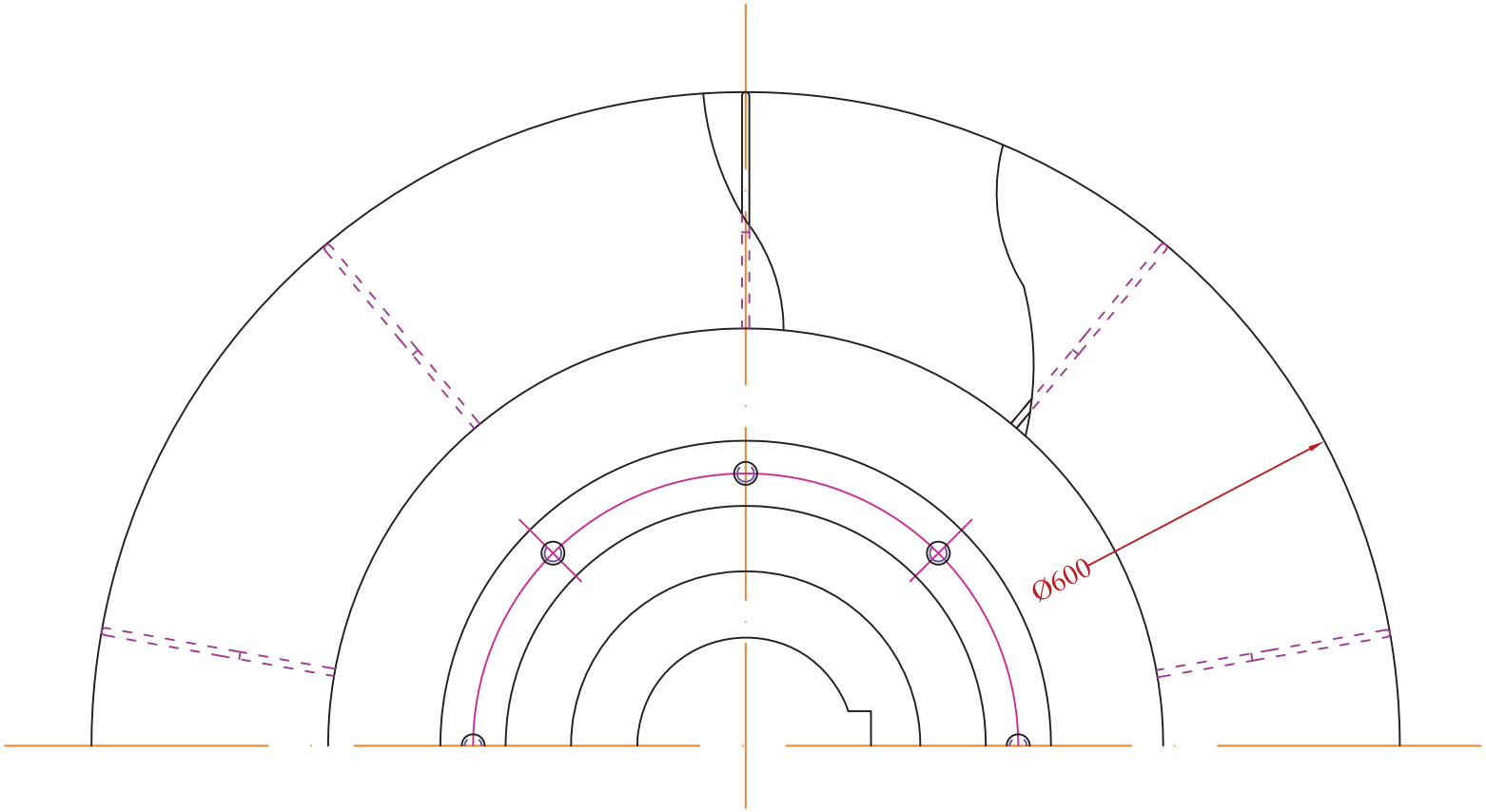

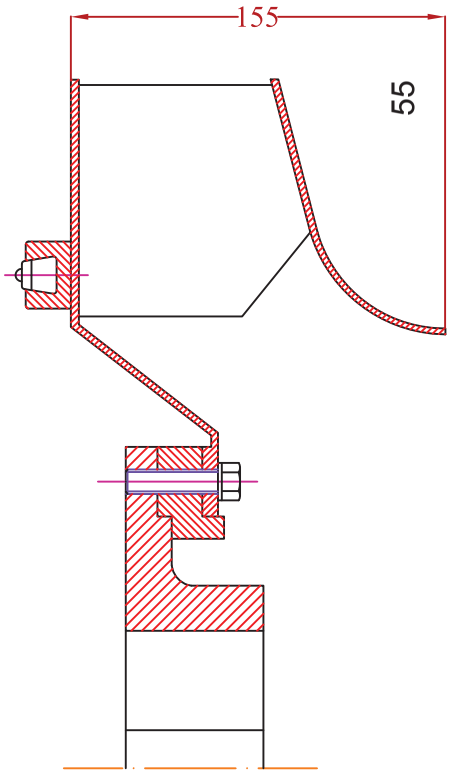

				Date	Signature	Weight :
			Designed by	21/05/12	St.Karageorgis	26 Kg
			Checked by			
			Examine by			
Change	Date	Name	SCALE			

VALIADIS
HELLENIC MOTORS

Fan
Motor Type :KHV 450-4

Design Number :

Replaced from

Replace the

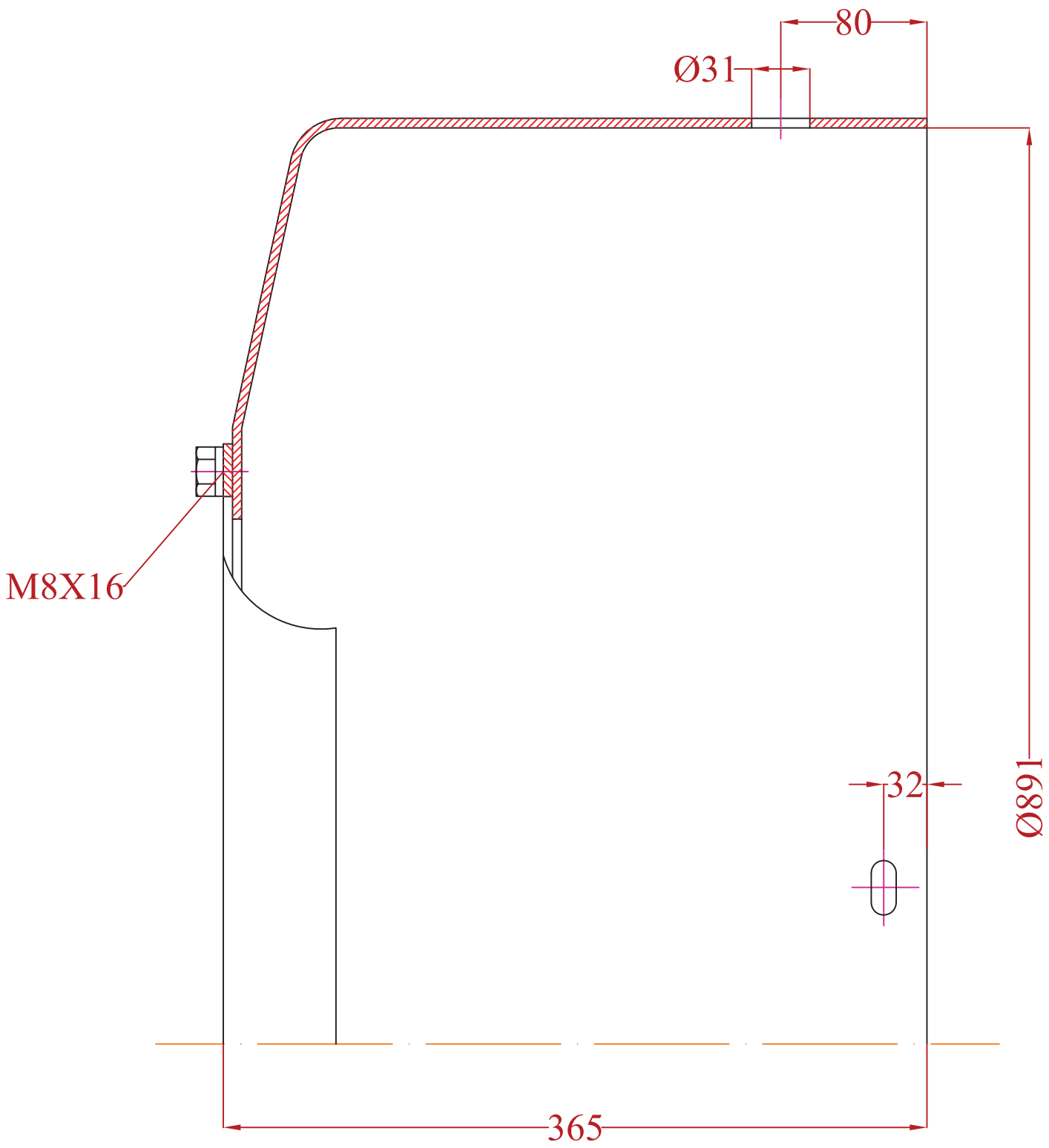

				Date	Signature	Weight :
			Designed by	21/05/12	St.Karageorgis	33.6 Kg
			Checked by			
			Examine by			
			SCALE			
Change	Date	Name				

VALIADIS
HELLENIC MOTORS

Fan Cover
Motor Type :KHV450-4

Design Number :

Replaced from

Replace the

MOTOR TYPE : KHV560-4
MOUNTING : B3

VALIADIS S.A.

Quality Assurance Certificate EN ISO 9001:2008

KHV 560-4 / 6000V / 1250KW No:201108724

Test Results Data

Nameplate data

Type	KHV560-4	Cos φ	0.87
Rated voltage	6000 V	Connection	Y
Rated current	143 A	Duty	S1
Rated power	1250 KW	Ins .Class	F
Rated speed	1485 r/min	Pro. Class	IP65
Efficiency	96.1 %	Serial No.	201108724
Frequency	50 Hz		

No-load test **At rated voltage Un**

No load loss	32998.00 (W)	**No load current**	34.19 (A)
Machine loss	1290400.00 (W)	**Core loss**	18403.00 (W)
Degrees of unbalance in a three phase system (current)			1.52 (%)

Temperature-rise test **Running at rated frequency**

Voltage	6000.0 (V)	**Current**	139.40 (A)
Power	1290400.0 (W)	**Temperature – rise Δ θ**	97.79 (K)
Stator temperature	71.7 (°C)	**Bearing temperature**	81.5 (°C)

Load performance

Load	U_N (V)	f(Hz)	P1(W)	I1(A)	n(r/min)	T(N*m)	Cos φ	Eff (%)
125%	6000	50	1630798.0	177.60	1486.9	10034.7	0.883	95.81
100%	6000	50	1304058.0	141.40	1490.9	8006.0	0.887	95.85
75%	6000	50	981801.0	107.60	1494.1	5991.6	0.878	95.49
50%	6000	50	663087.0	76.29	1496.5	3988.0	0.836	94.26
25%	6000	50	347066.0	47.39	1498.1	1991.9	0.705	90.04

Temperature-rise at rated voltage and frequency and full-load current 100.62 (K)

ATHENS : 18, Gr. Labraki Str., 141 23 Likovrisi Tel : +30210-2817217, Fax : +30210-2814277
THESSALONIKI : INDUSTRIAL ARE OF SINDOS., O.T. 48B, 15η STREET, 570 22
Tel :+302310–796646, Fax :+302310–796645
e-mail : valiadis@valiadis.gr – http : //www.valiadis.gr
ROMANIA: 1, Aleea Meseriasilor, Bloc C93, Etaj 2, Ap.16, Sector 6, 061647-Bucharest, ROMANIA
Tel : ++4021 413 5902, Fax: ++4031 815 6441, ++4031 816 5216
ε-mail: romania@valiadis.gr -http:// www.ac-motors.eu

Locked test

Rated current	143	(A)	**Starting current**	975.94	(A)
Starting torque	15215.30	(N*m)	**Rated torque**	8038	(N*m)
Locked/Rated current	6.82		**Locked / Rated torque**	1.89	

Noise and Vibration **Running at rated voltage and frequency**

Noise (Measured at 1.00 m far away from the motor)(sound power level (A))	104.5 (dB)
Vibration	2.60 (mm/S)

Inspector		**Check**		**Date**	

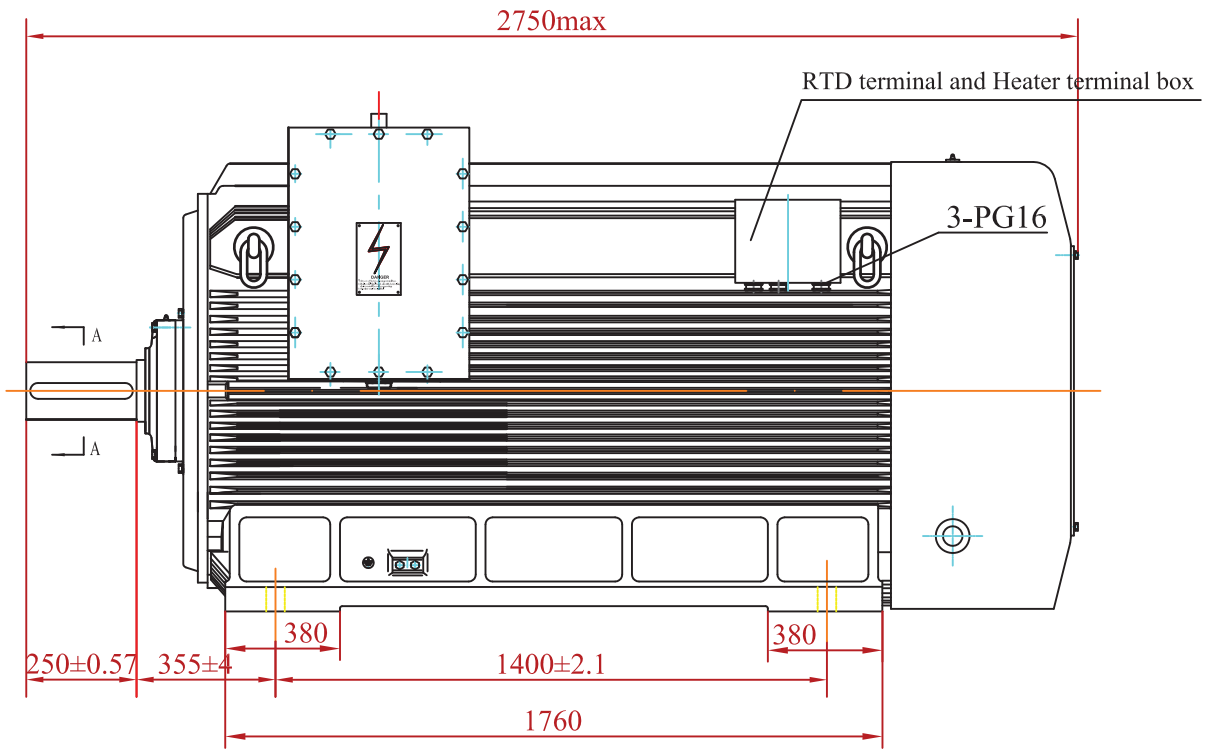

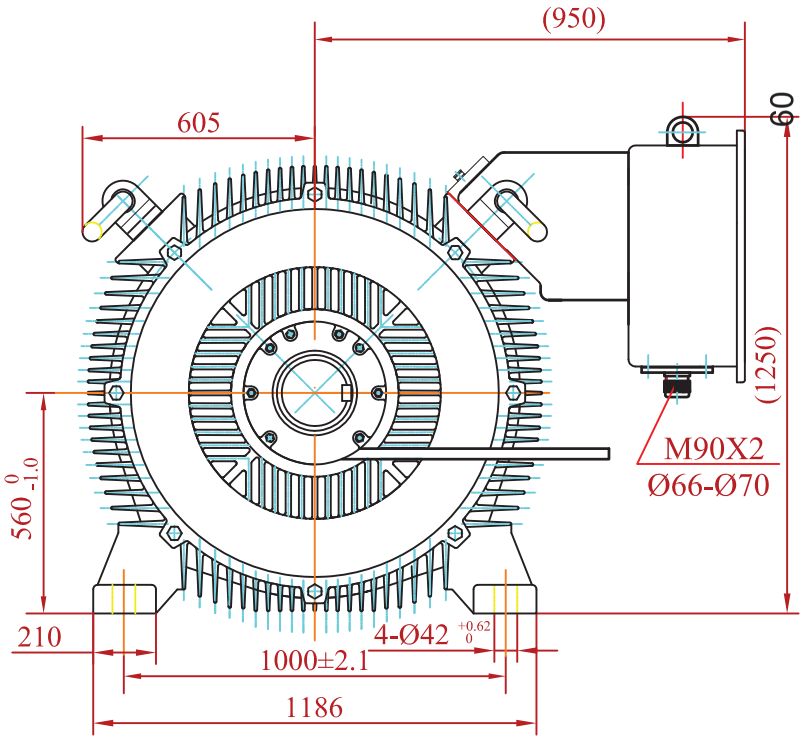

A-A

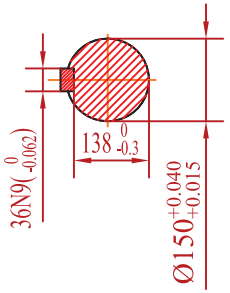

8. Technical data

type	power (KW)	volt (V)	frequency (Hz)	Full load current (A)	Full load speed(r/min)	Full load Efficiency(%)	Full load Power factor	Max torque / rated torque	Locked current / rated current	Locked torque / rated torque	Weight (kg)
KHV-560-4	1250	6000	25-50	143	1485	96.1	0.87	2.0	6.0	0.7	6200

Technical requirements

1. The direction of rotation viewed from the shaft end could be clockwise or unclockwise.But couldn't be rotate to and fro or plug braking.
2. Protection IP65. IMB3
3. Insulation class F.
4. Cooling type IC411.
5. Bearing grease UnirexN2,shaft insulated
   Bearing type: Driving end 6334/C3 ,Non driving end 6330/C3
6. Temperature thermistor for winding and bearing is Pt100.
7. Heater :AC/220V 2X190W.

				Date	Signature		
			Designed by				VALIADIS HELLENIC MOTORS
			Checked by				
			Examine by				
			SCALE	Motor Type : KHV 560-4 Mounting : B3			Design Number :
							Replaced from
Change	Date	Name					Replace the

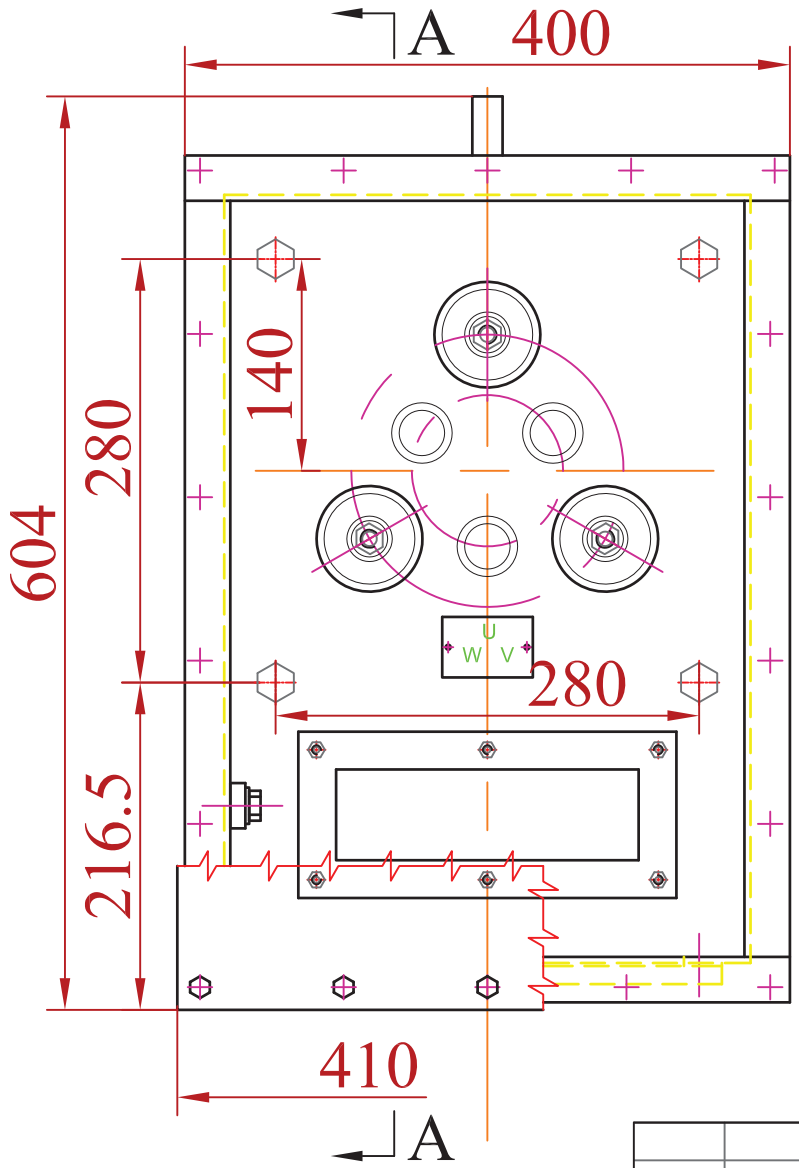

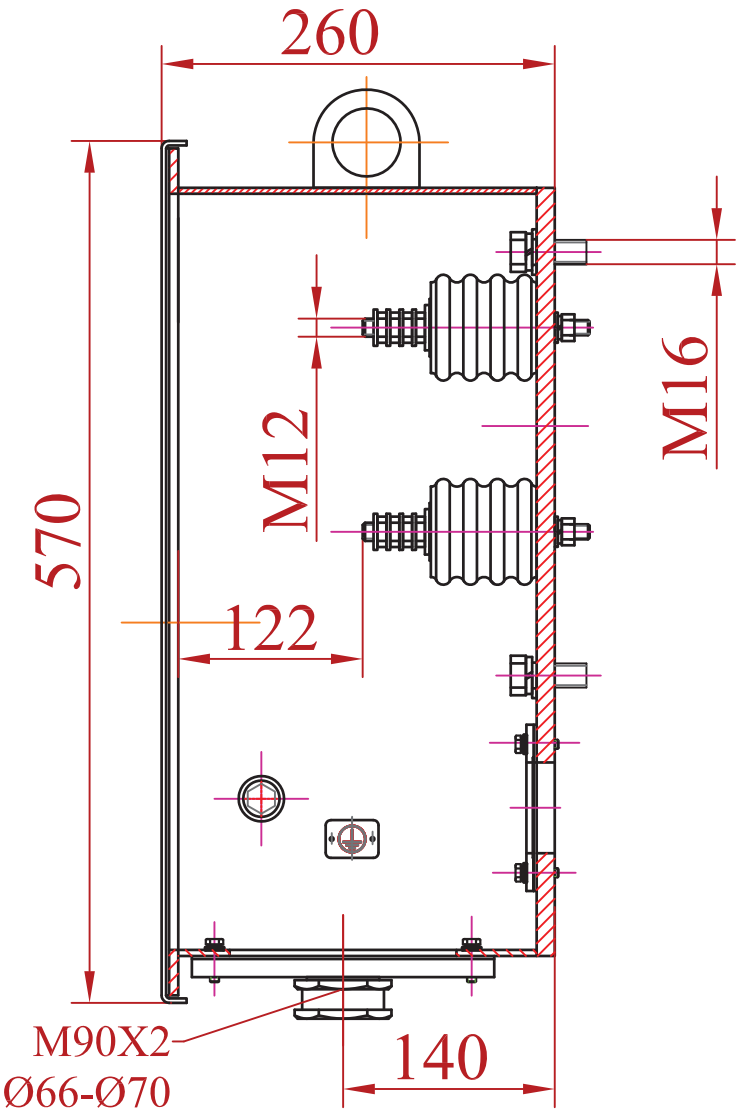

61

				Date	Signature	Weight :
			Designed by	27/03/12	St.Karageorgis	65 kg
			Checked by			
			Examine by			
Change	Date	Name				

VALIADIS
HELLENIC MOTORS

SCALE
1:5

MAIN TERMINAL BOX
KHV560-4

Design Number :

Replaced from

Replace the

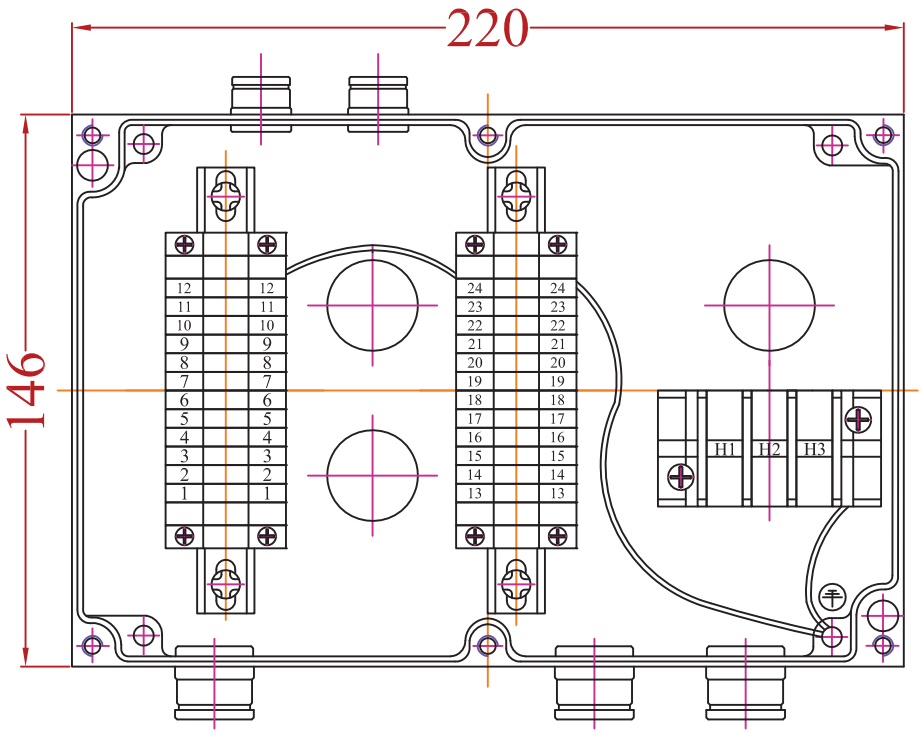

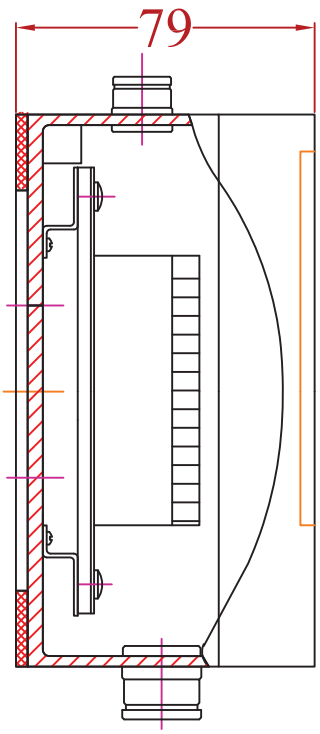

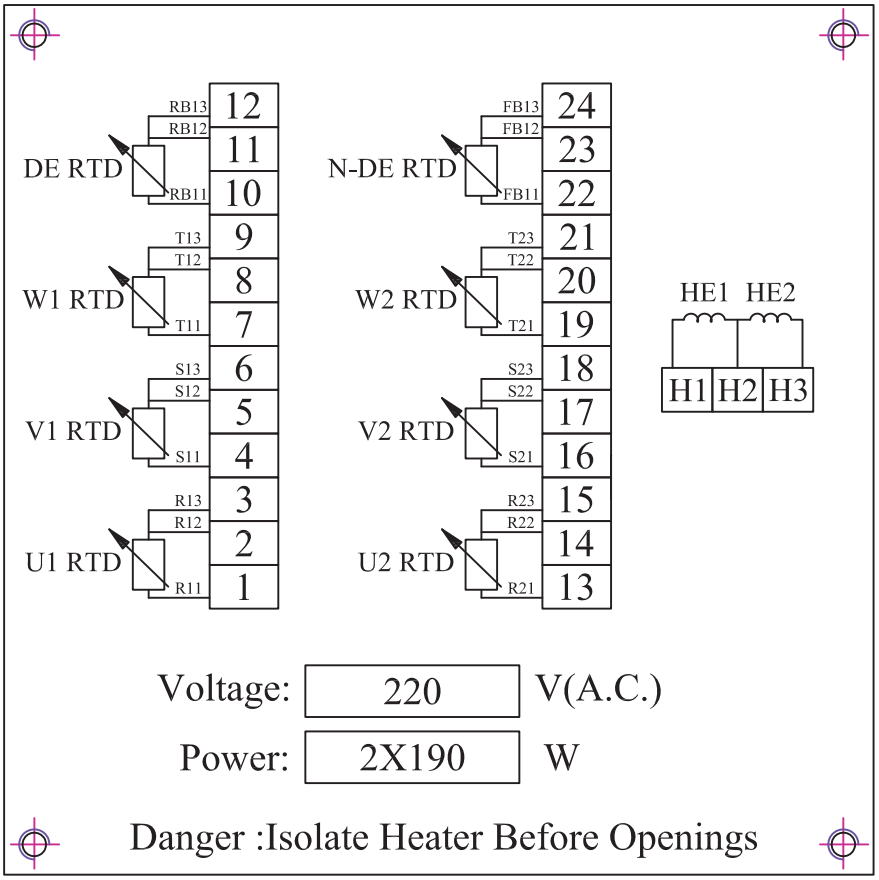

				Date	Signature	Weight :
			Designed by	23/03/12	St.Karageorgis	3 Kg
			Checked by			
			Examine by			
Change	Date	Name	SCALE 1:2	Heater and RTD Terminal box KHV 560-4 /6kV		

VALIADIS
HELLENIC MOTORS

Design Number :

Replaced from

Replace the

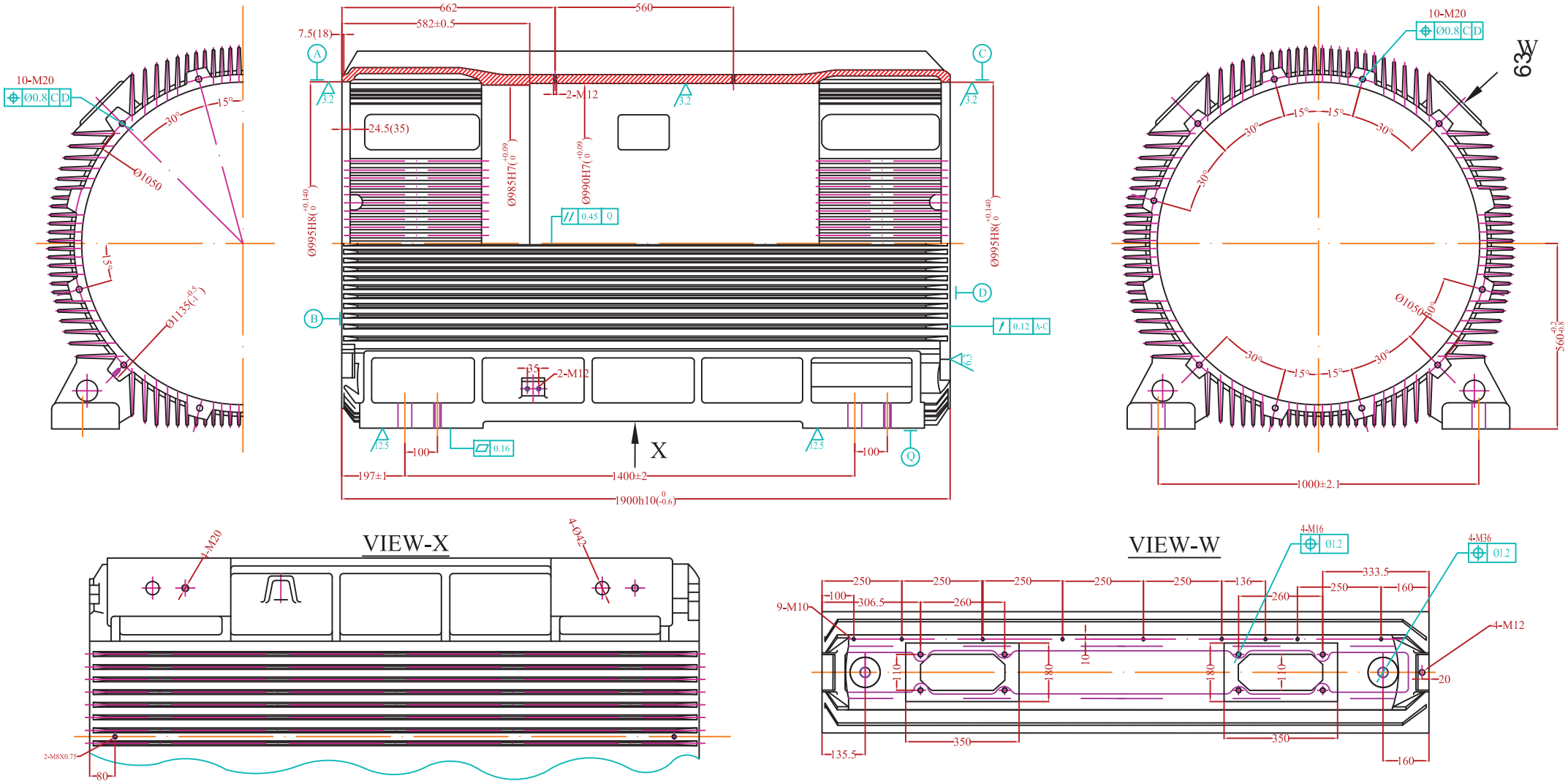

				Date	Signature
			Designed by	05/06/12	St.Karageorgis
			Checked by		
			Examine by		
Change	Date	Name	SCALE		

VALIADIS
HELLENIC MOTORS

FRAME
Motor Type :KHV560-4

Design Number :

Replaced from

Replace the

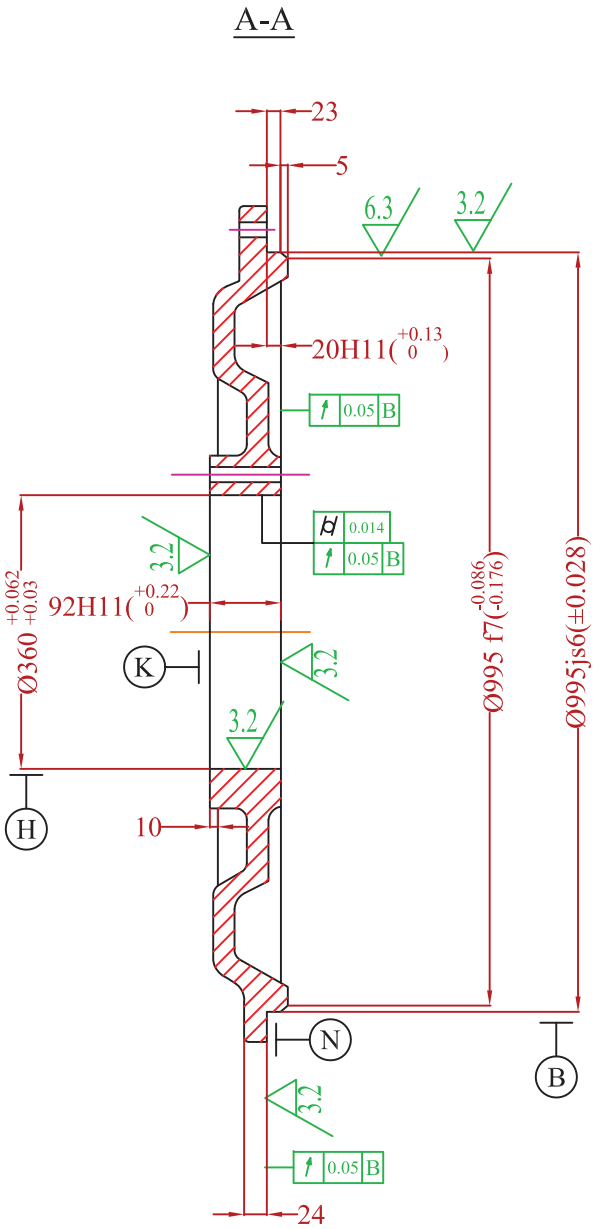

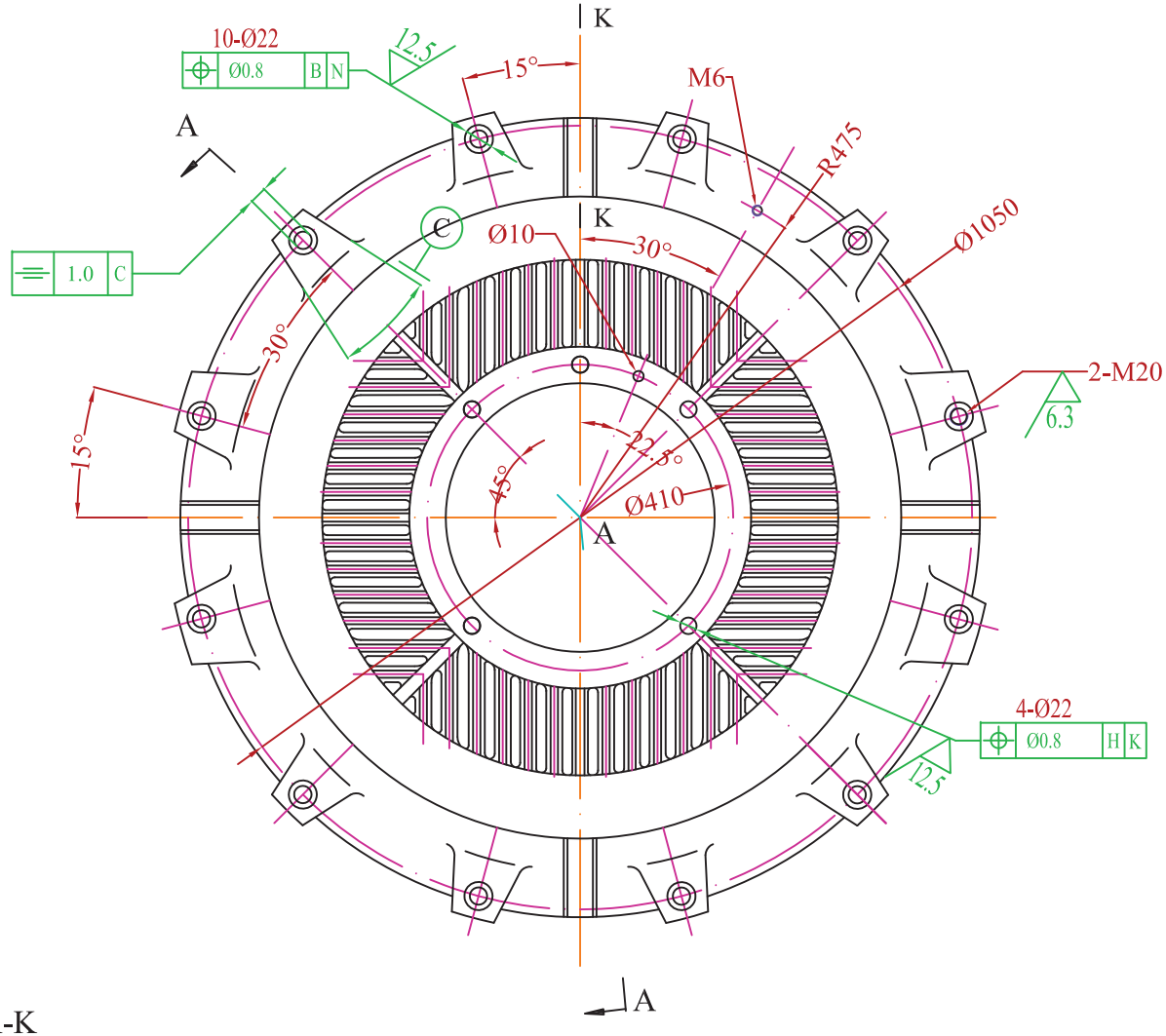

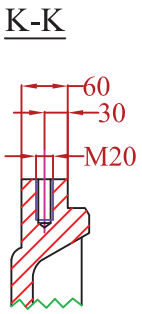

				Date	Signature	Weight :
			Designed by	01/06/12	St.Karageorgis	300 Kg
			Checked by			
			Examine by			
			SCALE	END SHIELD Motor Type:KHV560-4		Design Number :
						Replaced from
Change	Date	Name				Replace the

VALIADIS
HELLENIC MOTORS

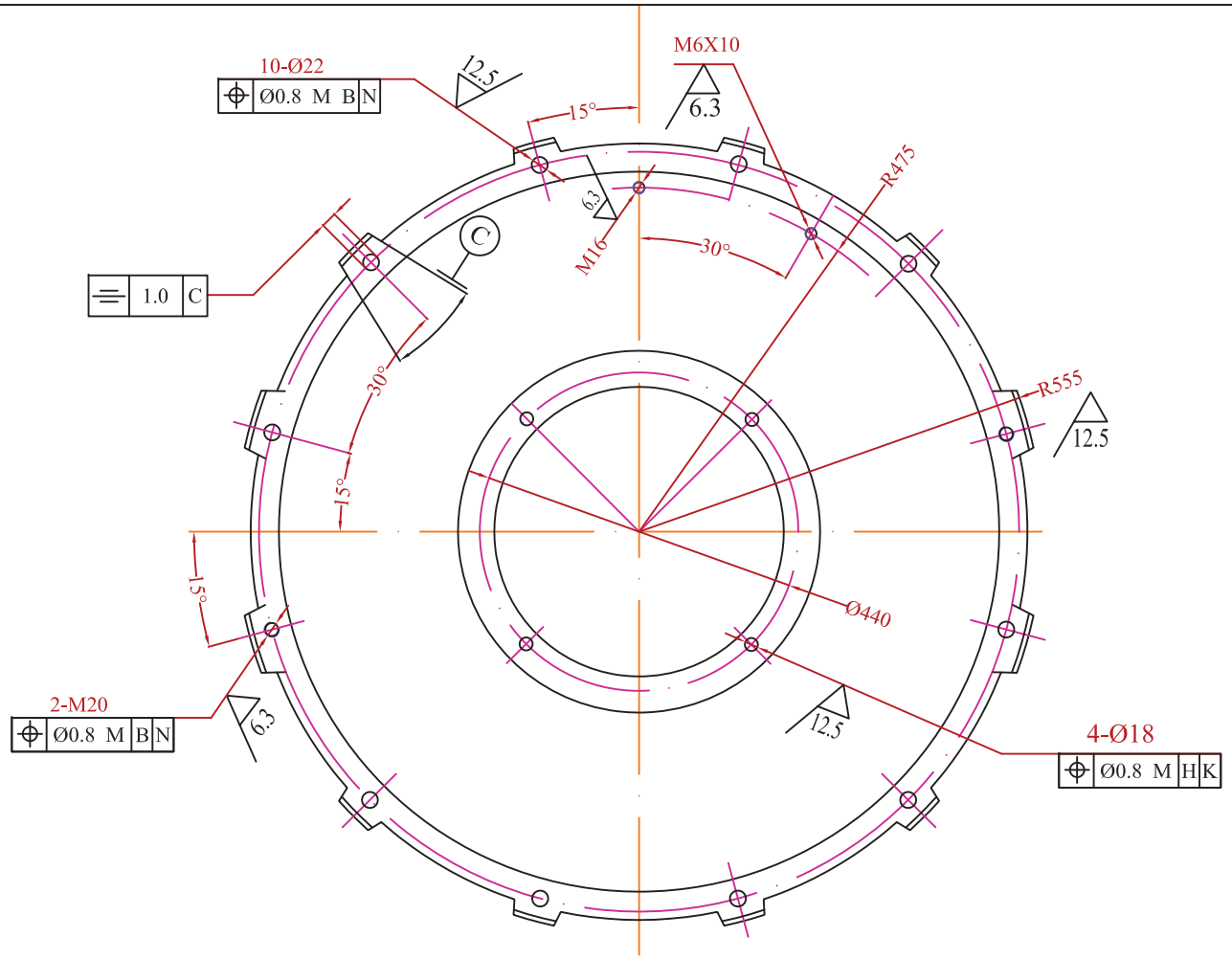

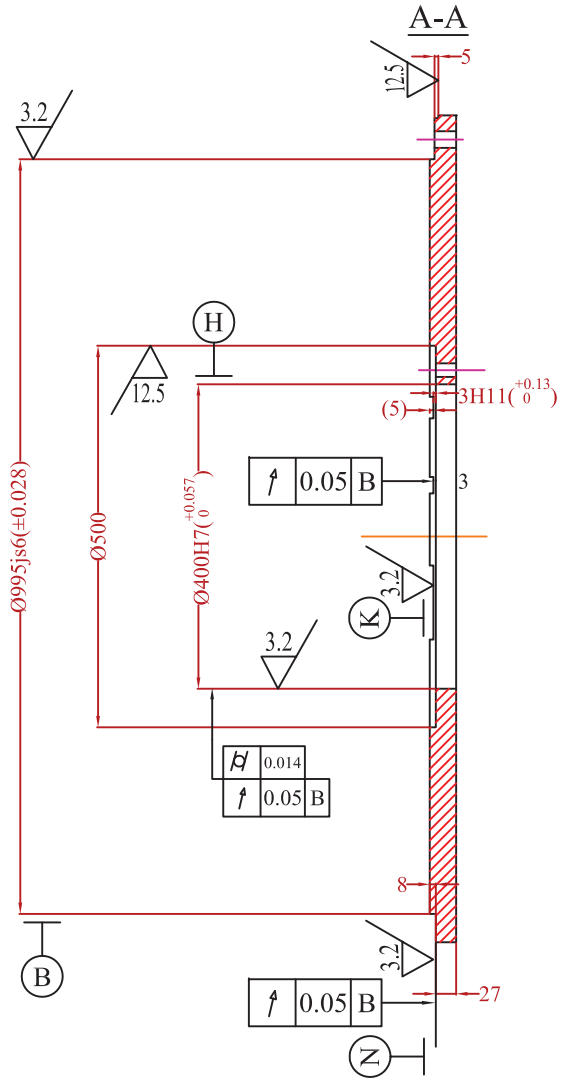

65

				Date	Signature	Weight :
			Designed by	27/03/12	St.Karageorgis	200 Kg
			Checked by			
			Examine by			
Change	Date	Name	SCALE			

VALIADIS
HELLENIC MOTORS

NED END-SHIELD
Motor Type : KHV560-4

Design Number :

Replaced from

Replace the

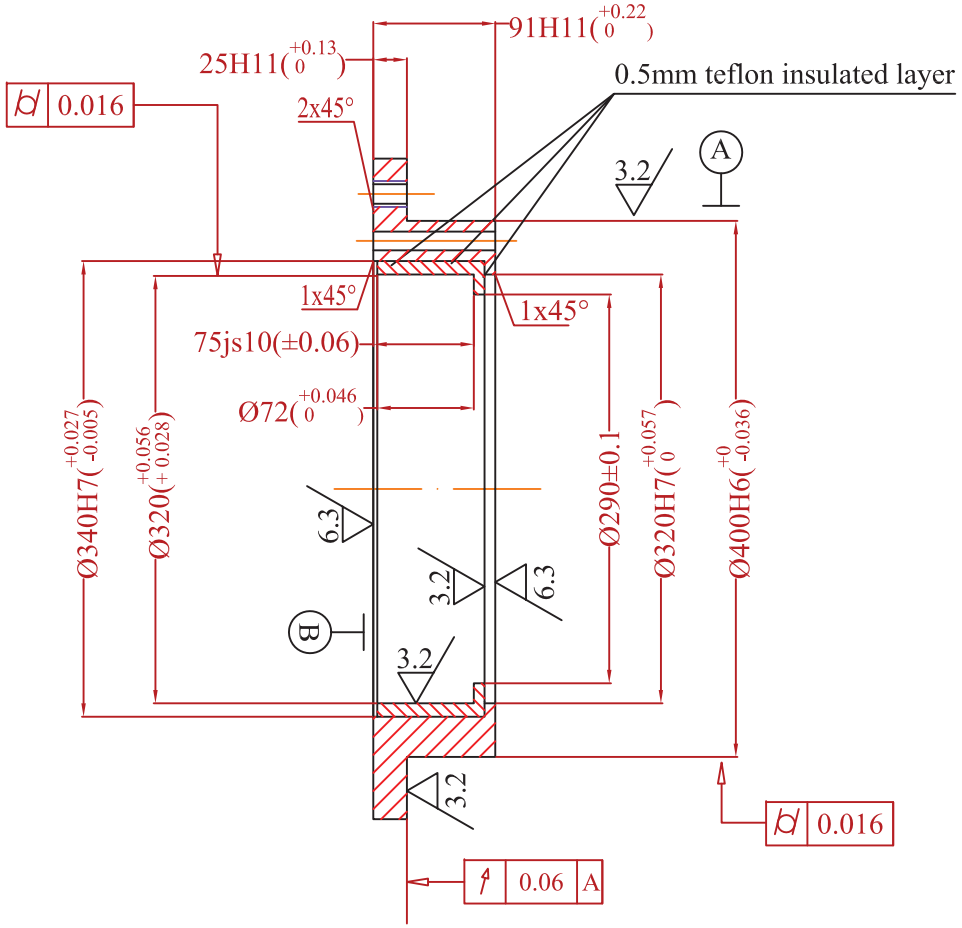

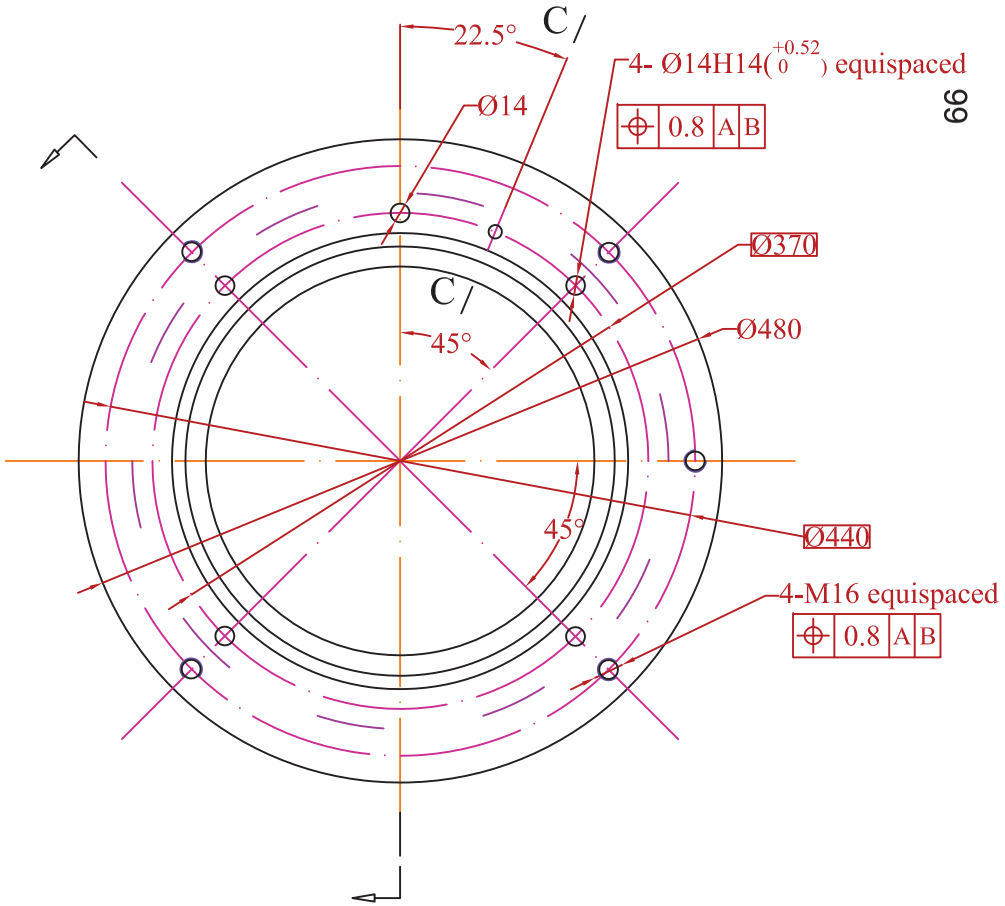

C-C

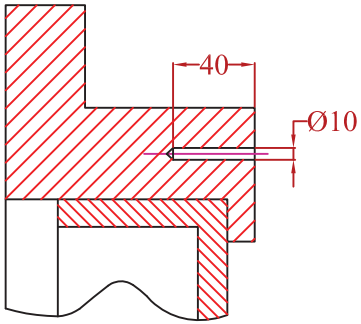

				Date	Signature	Weight :
			Designed by	26/03/12	St.Karageorgis	43 Kg
			Checked by			
			Examine by			
Change	Date	Name	SCALE 1:4	Bearing Sleeve Motor Type : KHV560-4		Design Number : Replaced from Replace the

VALIADIS
HELLENIC MOTORS

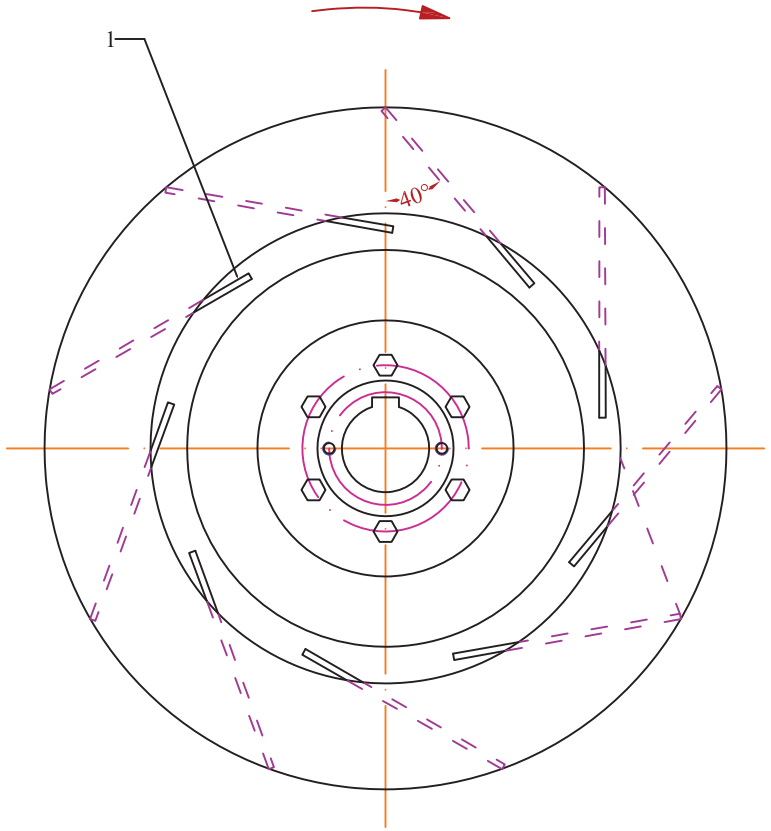

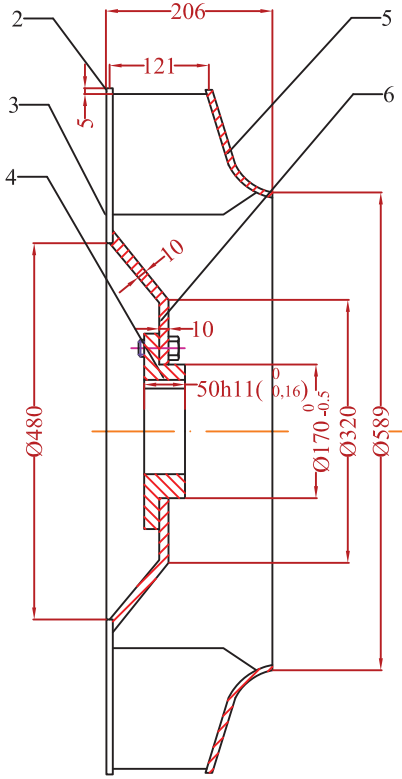

3

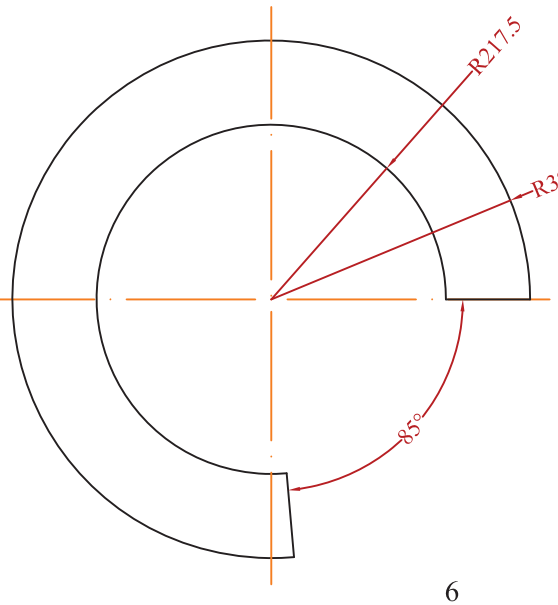

5

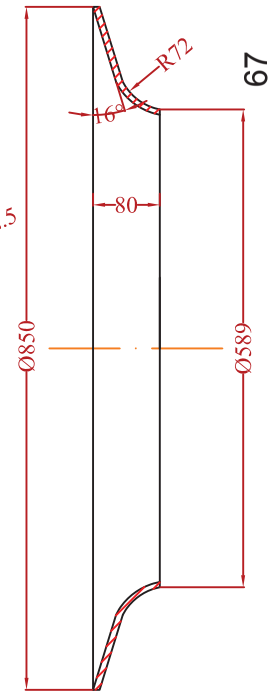

67

6

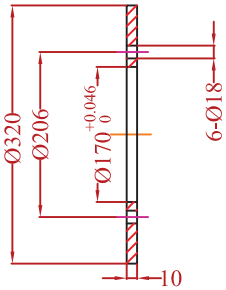

1

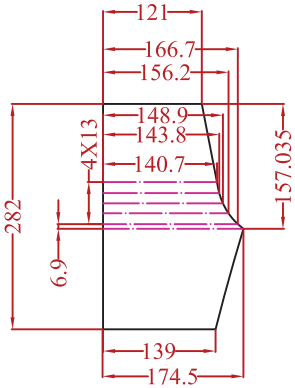

2

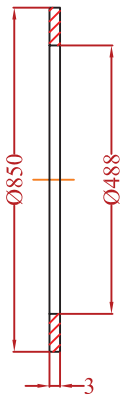

4

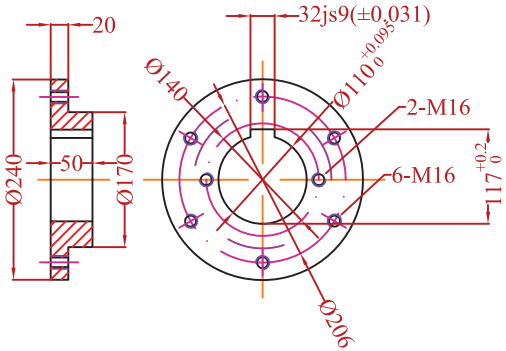

				Date	Signature	Weight : 46 Kg	VALIADIS HELLENIC MOTORS
			Designed by	03/06/12	St.Karageorgis		
			Checked by				
			Examine by				
			SCALE	FAN Motor Type:KHV560-4			Design Number :
							Replaced from
Change	Date	Name					Replace the

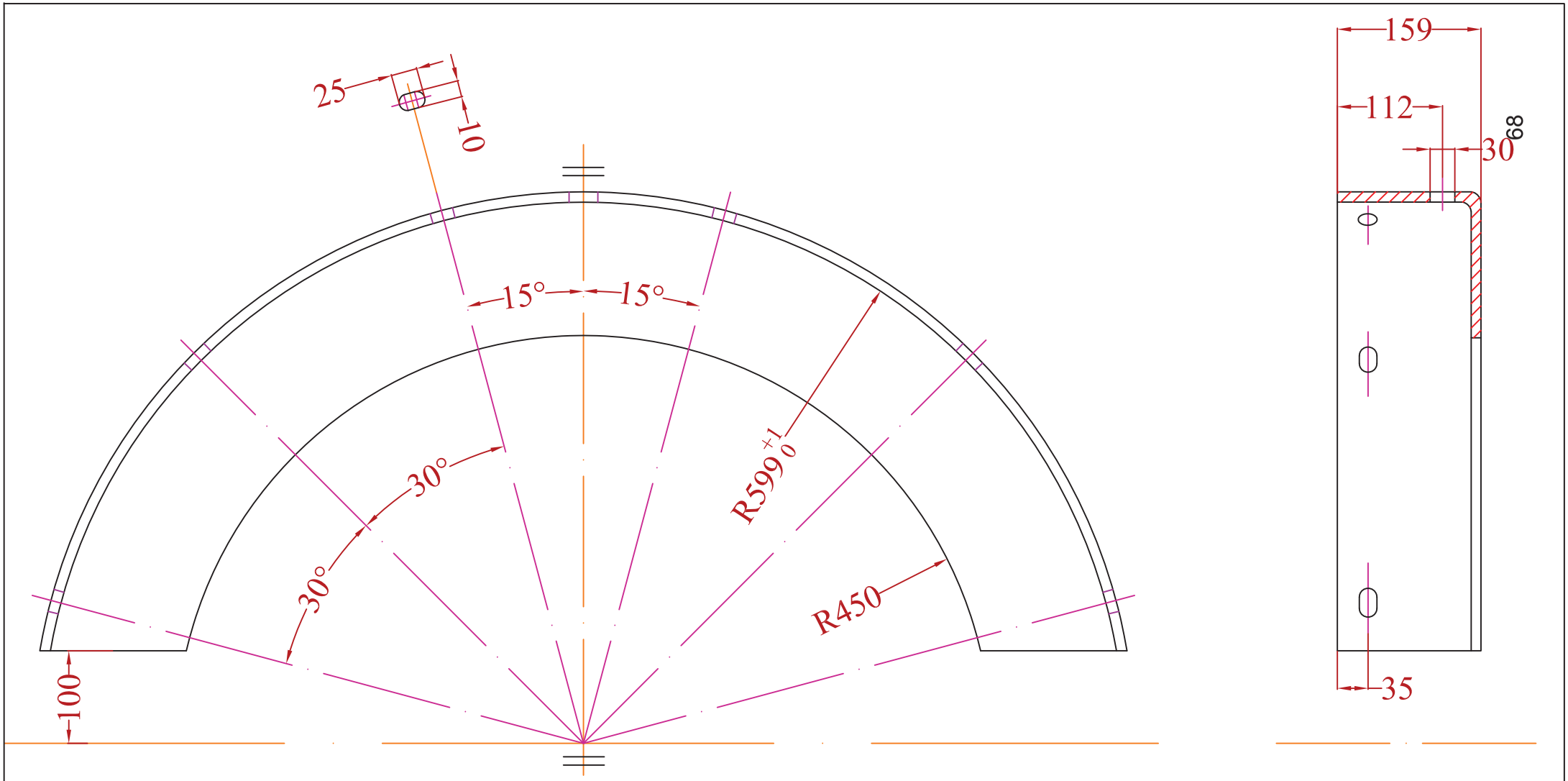

				Date	Signature	Weight: 8 Kg
			Designed by	03/06/12	St.Karageorgis	
			Checked by			
			Examine by			
			SCALE	FRONT FAN COVER Motor Type :KHV560-4		
Change	Date	Name				

VALIADIS
HELLENIC MOTORS

Design Number :

Replaced from

Replace the

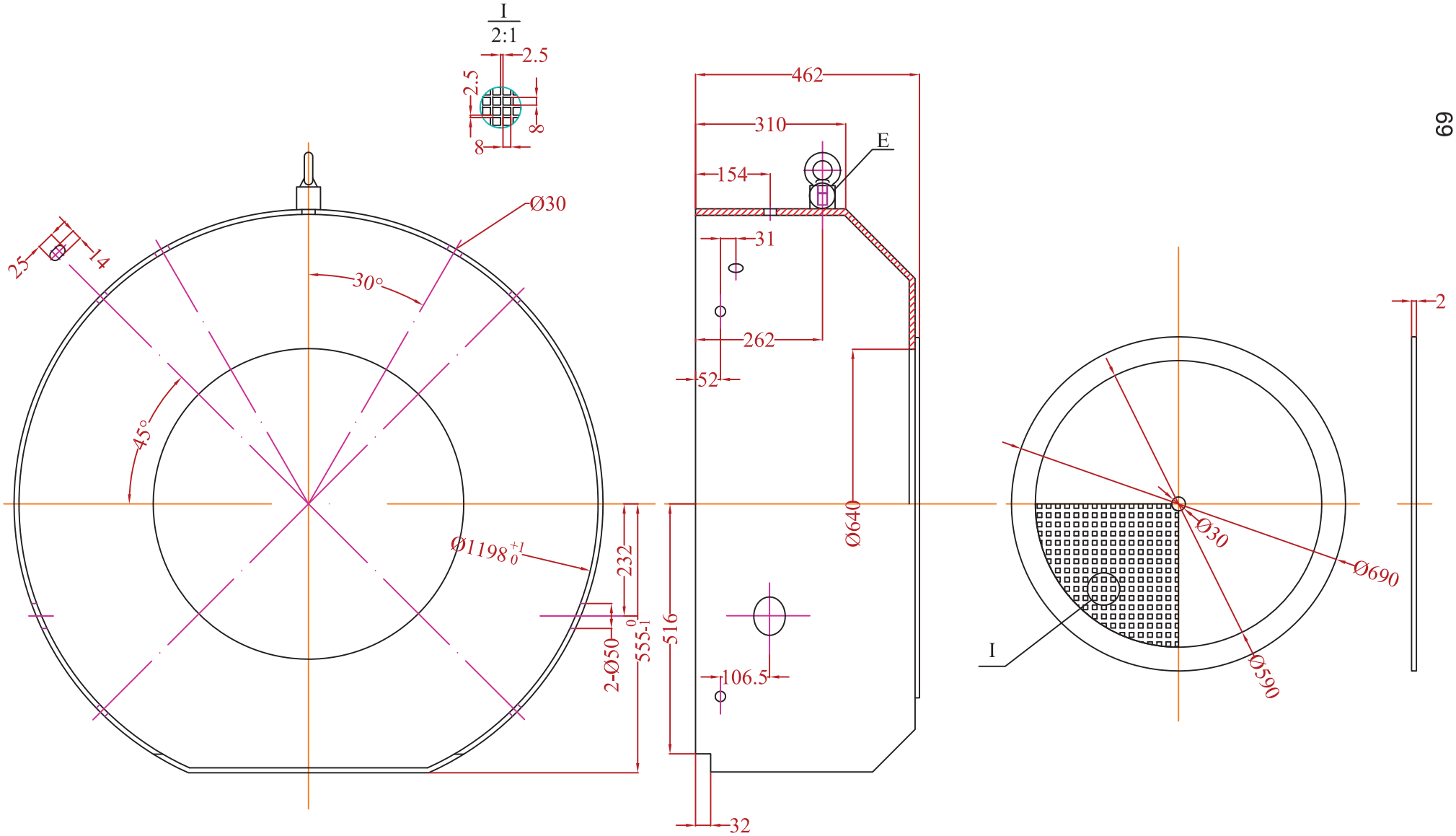

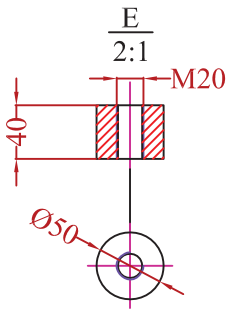

				Date	Signature
			Designed by	03/06/12	St.Karageorgis
			Checked by		
			Examine by		
Change	Date	Name	SCALE		

VALIADIS
HELLENIC MOTORS

FAN COVER
Motor Type :KHV560-4

Design Number :

Replaced from

Replace the

MOTOR TYPE : KD450-6
MOUNTING : B3

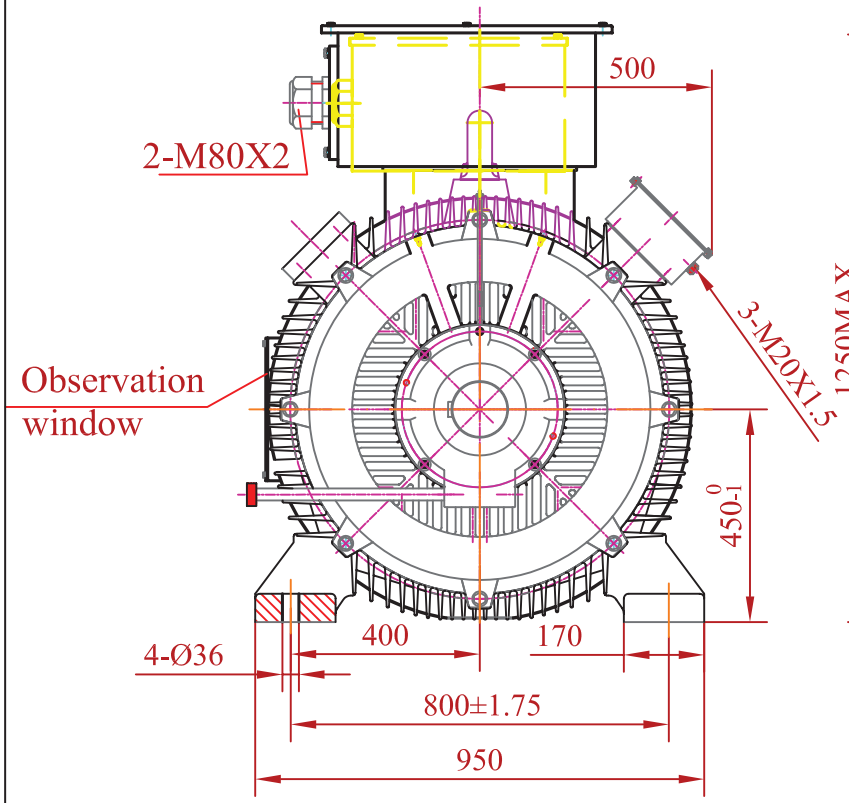

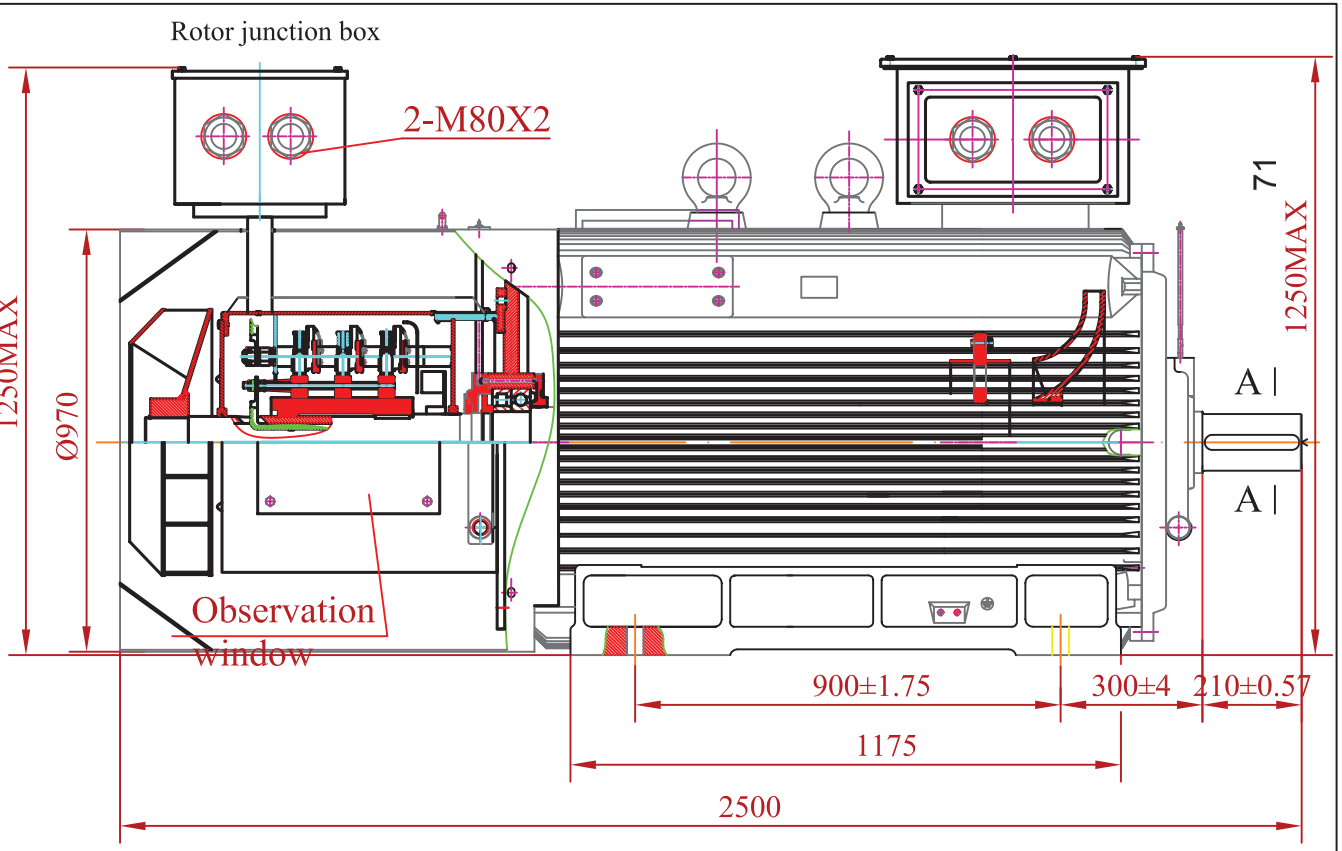

Type	kW	V	A	Hz	r/min	η(%)	cosφ	V2	A2	Tmax/TN	Ins.CL	Conn	Rtg	IM	IP	Bearing DE	Bearing NDE
KΔ 450-6	310	380	608	50	985	94.5	0.82	716	258	2.4	F	Δ/Y	S1	B3	55	NU226 ECJ	6226 C3+NU226 ECJ

Main rotor motor terminal box and terminal box can be rotated 180 °

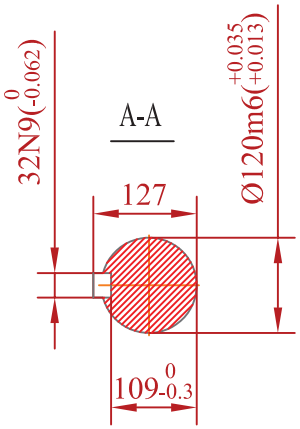

				Date	Signature
			Designed by	25/04/14	St.Karageorgis
			Checked by		
			Examine by		
Change	Date	Name			

VALIADIS
HELLENIC MOTORS

SCALE
1:16

Motor Type :KΔ450-6
Mounting : B3

Design Number :
MTKD-140425-3

Replaced from

Replace the

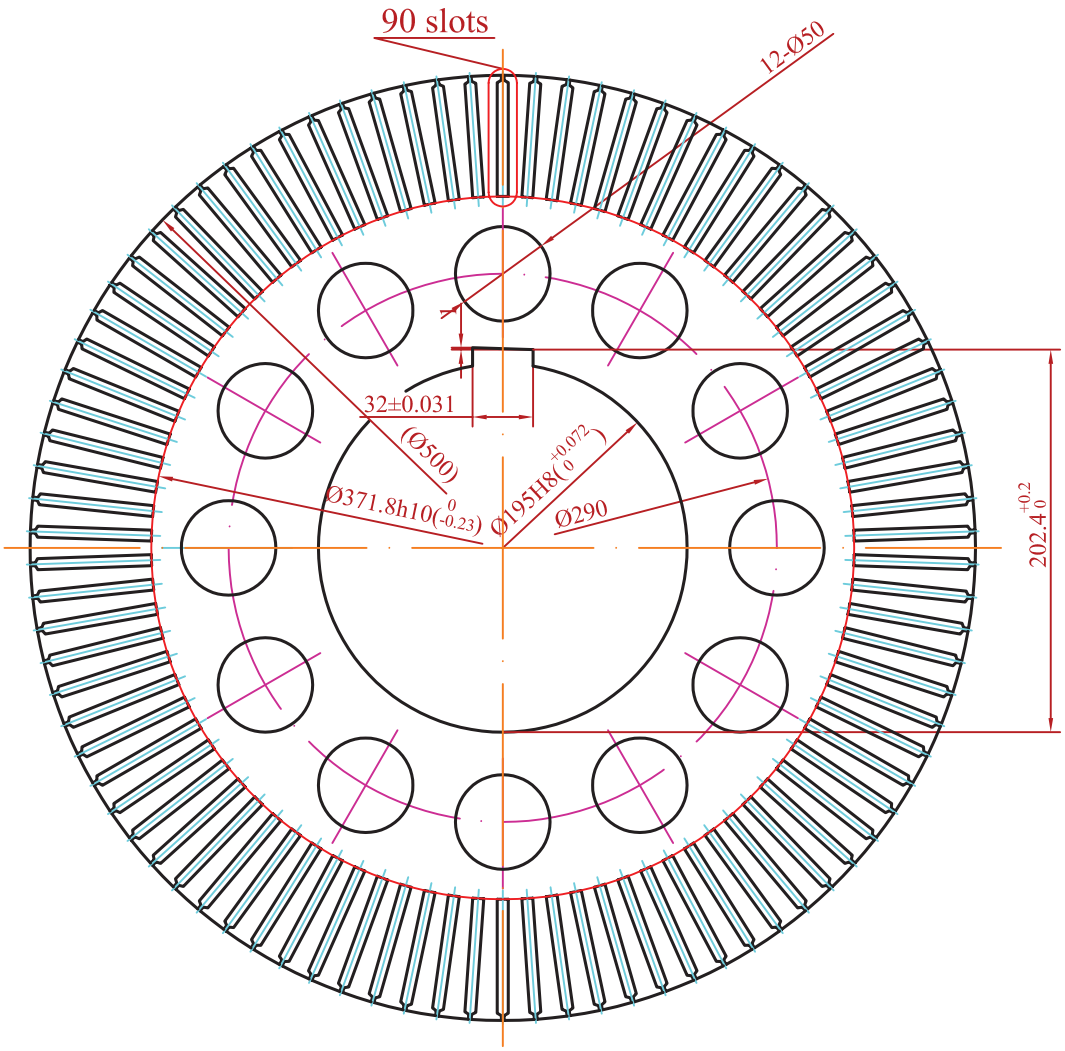

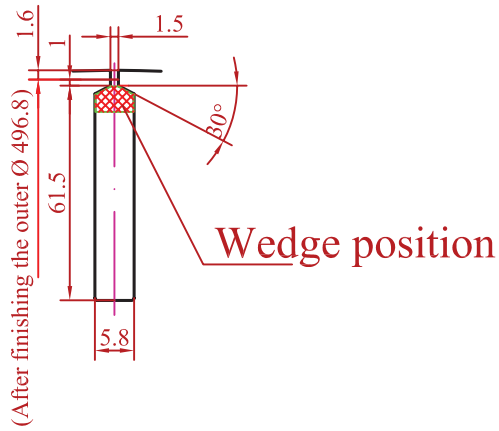

"Wedge"

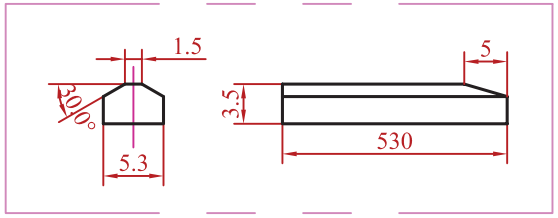

Technical requirements

1) Punching burrs shall not be greater than 0.05,
duplex stamping die punching,
the individual parts of the glitch allowed is 0.10;

2) The H12, high yoke no greater than 0.2.
Punching net area: 1104.48cm²

				Date	Signature		
			Designed by	08/05/14	St.Karageorgis		VALIADIS HELLENIC MOTORS
			Checked by				
			Examine by				
			SCALE 1:4	ROTOR LAMINATION Motor Type : KΔ 450-6			Design Number : SP-RTR-140508-2
							Replaced from
Change	Date	Name					Replace the

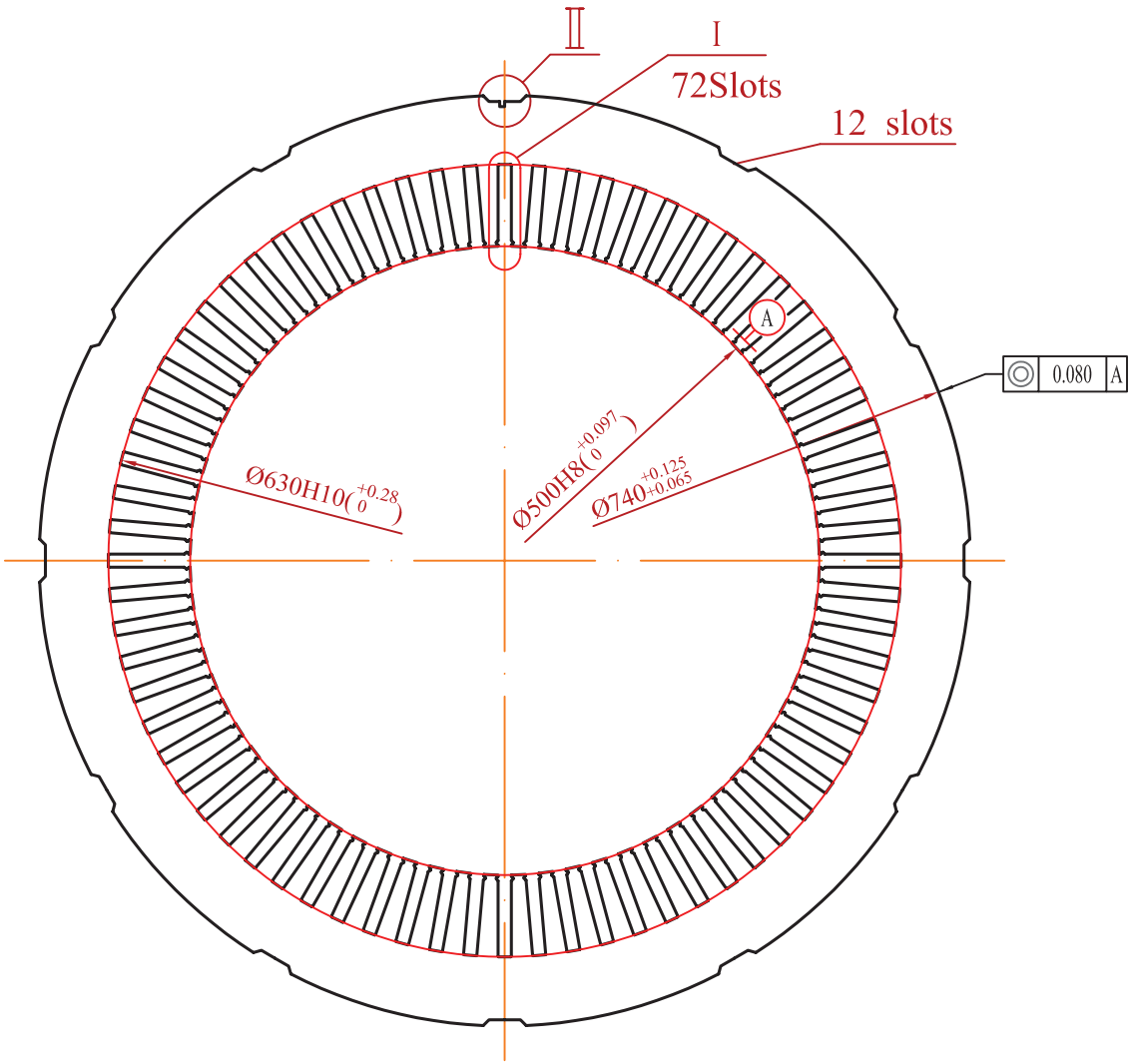

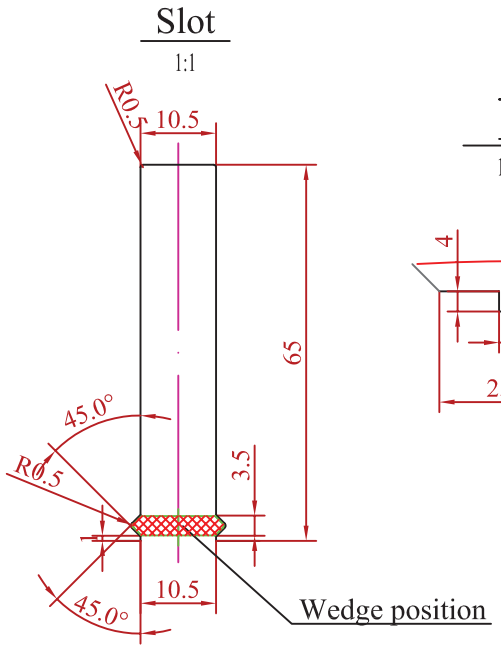

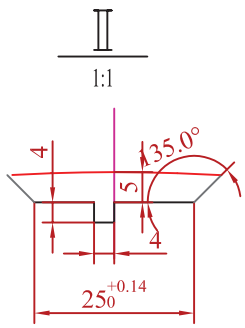

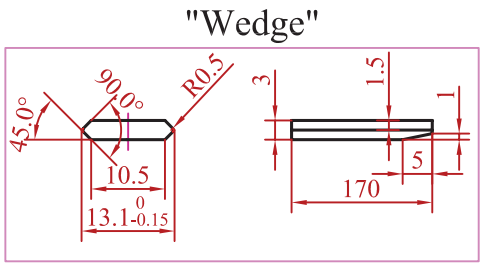

Technical Requirements

1) Punching burrs shall not be greater than 0.05

2) the sharp corners rounded radius R0.5.
Punching net area 1824.06cm ^{2}

				Date	Signature	
			Designed by	08/05/14	St.Karageorgis	
			Checked by			
			Examine by			
			SCALE 1:6	STATOR LAMINATION Motor Type : KΔ 450-6		
Change	Date	Name				

VALIADIS
HELLENIC MOTORS

Design Number :
SP-STTR-140508-3

Replaced from

Replace the

DE bearing assembly

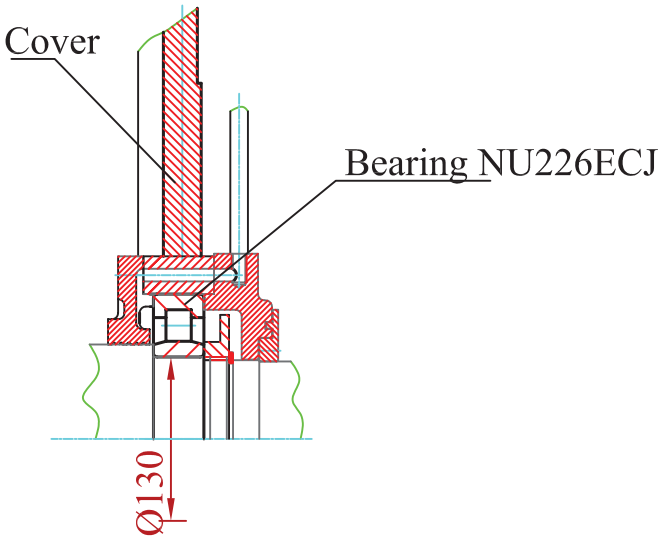

Stator wedge

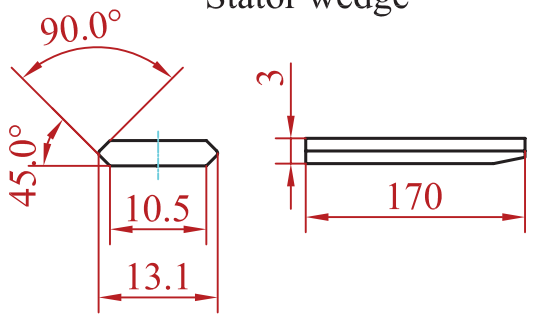

Winding data

Stator windings data: flat copper wire AWG 3.55X8.5 13-turn road parallel 6
Rotor windings data: flat copper wire gauge 3X25 2 turns

NDE bearing assembly

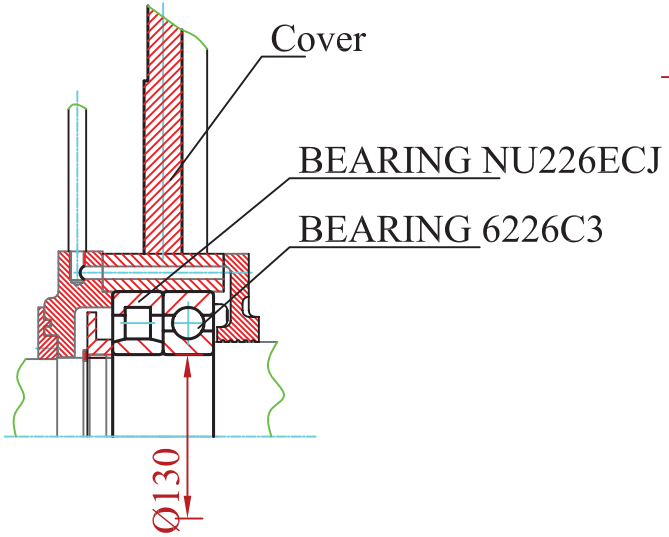

Rotor Wedge

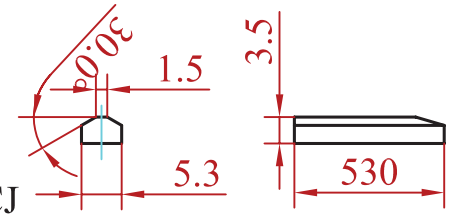

				Date	Signature
			Designed by	25/04/14	St.Karageorgis
			Checked by		
			Examine by		
Change	Date	Name			

VALIADIS
HELLENIC MOTORS

SCALE
1:6

BEARINGS ASSEMPLY
Motor Type : KΔ 450-6

Design Number :
SP-BRGS-140425-1

Replaced from

Replace the

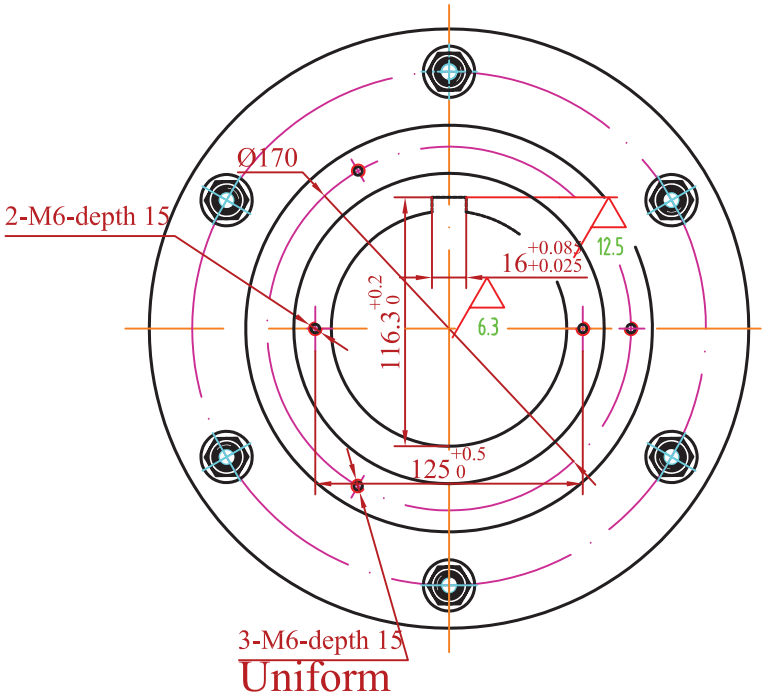

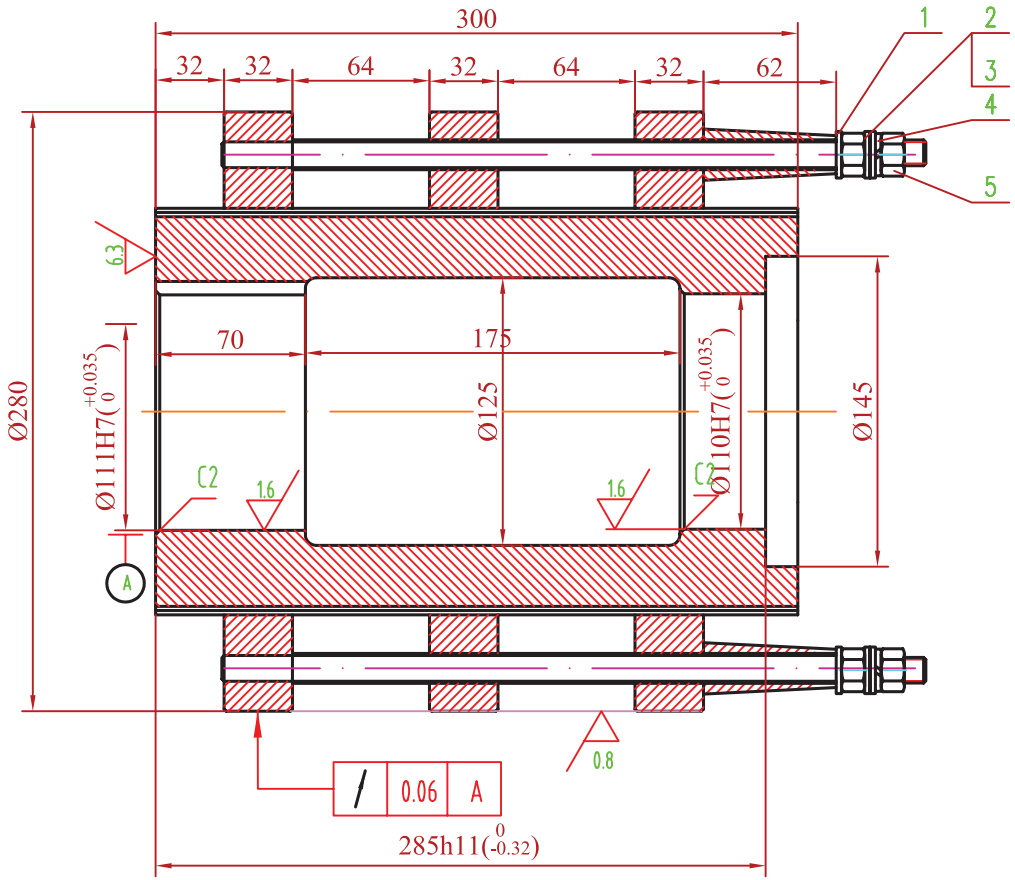

Expanded view

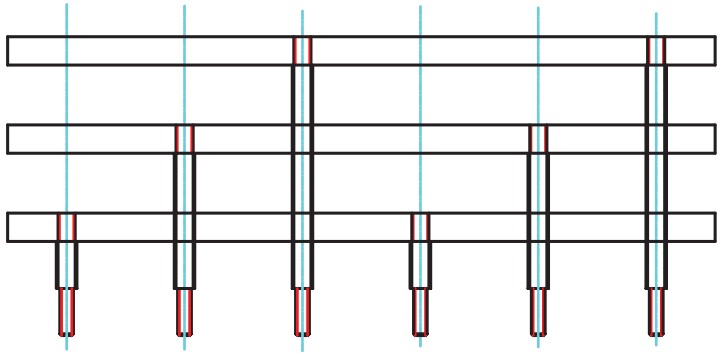

Technical Requirements

1.A conductive ring inverted acute blunt 1 × 45 °.

2.White and insulation resistance of not less than 1MΩ.

3.Slip ring to ground power frequency voltage test 5000V, 1 minutes.

4.The collector should be painted on both sides of the ring epoxy ester insulating paint H31-3

				Date	Signature		
			Designed by	25/04/14	St.Karageorgis		VALIADIS HELLENIC MOTORS
			Checked by				
			Examine by				
			SCALE				Design Number : SP-140425-4
							Replaced from
Change	Date	Name					Replace the

MOTOR TYPE : KHV450-12
MOUNTING : V1

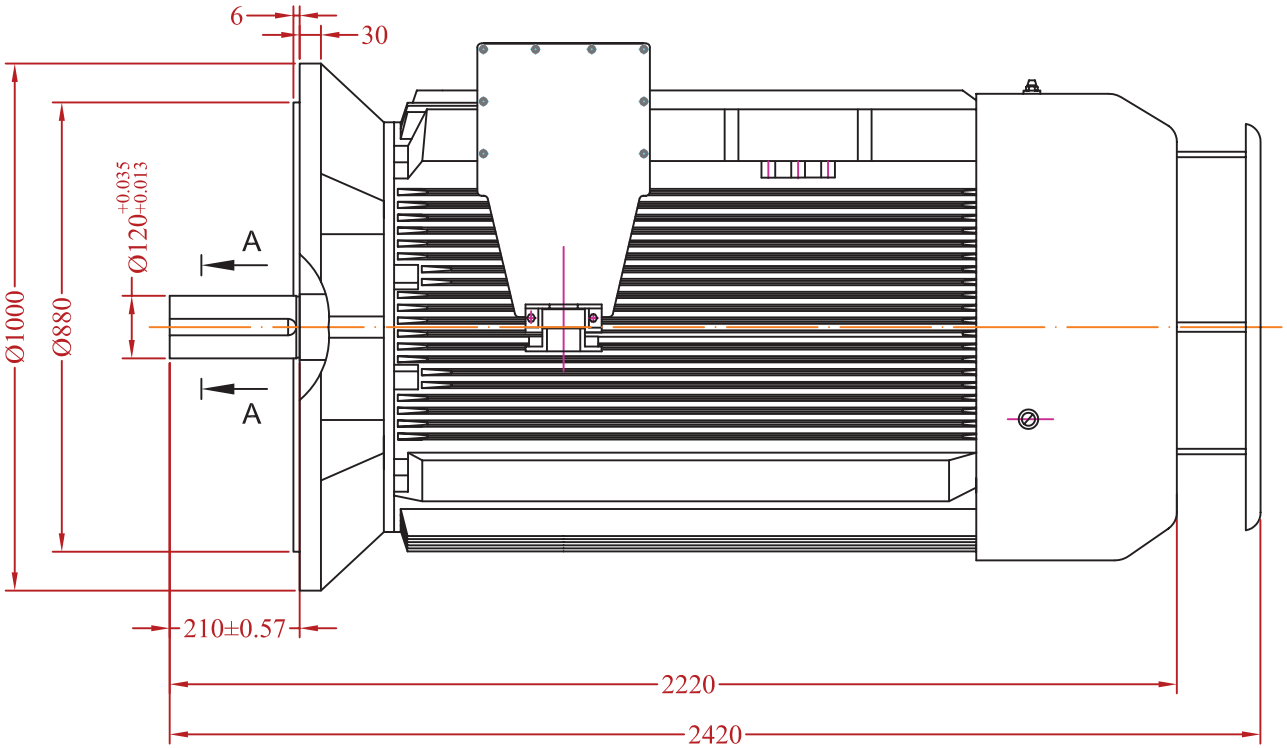

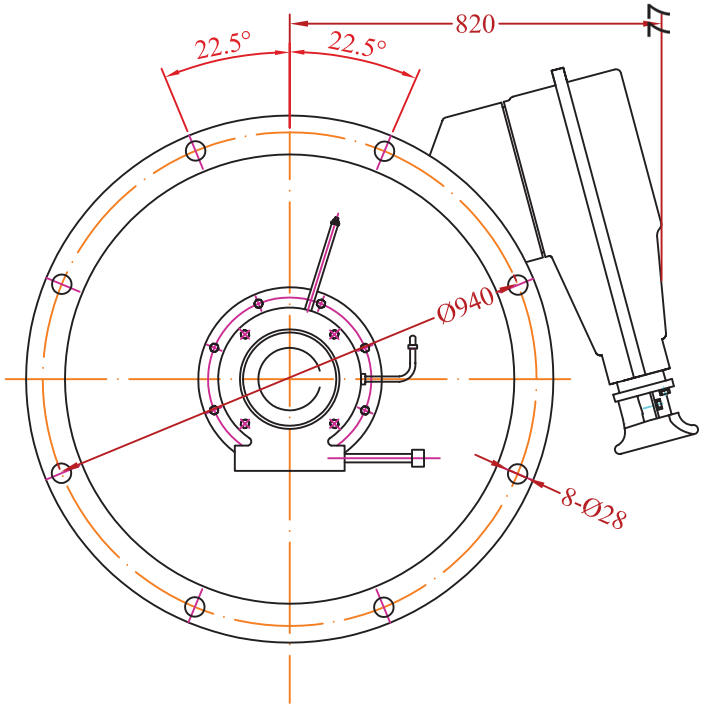

A - A

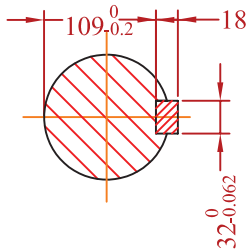

				Date	Signature
			Designed by	09/12/15	St.Karageorgis
			Checked by		
			Examine by		
Change	Date	Name	SCALE		

VALIADIS
HELLENIC MOTORS

MOTOR TYPE : KHV450
MOUNTING : V1
PRELIMINARY DRAWING

Design Number :
MTKHV-151509-2

Customer :

Replace the

VALIADIS S.A.

Hellenic Motors

Quality Assurance Certificate EN ISO 9001:2008

Certificate Reg.No. 04100970683

08/12/2015

DATA SHEET
FOR THREE PHASE ELECTRIC MOTOR
400KW / 12 POLES / MOUNTING V1 / 3300 V

ORIGIN	GREECE
MANUFACTURER	VALIADIS S.A.
STANDARDS	IEC 34-1
MOTOR TYPE	KHV450 –12
KIND OF MOTOR	ASYNCHRONOUS THREE PHASE , SQUIRREL CAGE
RATED VOLTAGE	3300 **V ± 5%**
CONNECTION	Y (STAR)
STARTING	DOL
RATED CURRENT	103.8 **A**
RATED POWER	400 **KW**
DUTY TYPE	S1
SERVICE FACTOR	1.0
POWER FACTOR 4/4	0.71 **(cos φ)**
EFFICIENCY 4/4	95 **(%)**
RATED SPEED	495 **min^{-1}**
RATED FREQUENCY	50 **Hz ± 2%**
RATED TORQUE	7717.2 **Nm**
BREAKDOWN TORQUE	200 %
LOCKED ROTOR TORQUE	80 %
LOCKED ROTOR CURRENT	550 %
CLASS OF INSULATION	F
DEGREE OF PROTECTION	**IP** 55
WEIGHT OF MACHINE	5900 **kg**
COOLING	IC 411
MOUNTING TYPE	V1
NOISE LEVEL	87 dBA
TEMPERATURE RISE	80 ◦C
AMBIENT TEMPERATURE	-20 ◦C +40 ◦C
ALTITUDE OF SIDE	Max. 1000 m ABOVE SEA LEVEL
LUBRICATION	GREASE
THERMAL PROTECTION	6XPT100 FOR STATOR & 2XPT100 (ONE PER BEARING
ADDITIONAL FEATURES	a. DIF. CT INCLUDED IN THE T/BOX
	b. COPPER ROTOR

ATHENS : *18, Gr. Labraki Str., 141 23 Likovrisi Tel : +30210-2817217, Fax : +30210-2814277*

THESSALONIKI *: INDUSTRIAL ARE OF SINDOS., O.T. 48B, 15η STREET, 570 22 Tel :+302310–796646, Fax :+302310–796645*

e-mail : valiadis@valiadis.gr – http : //www.valiadis.gr

ROMANIA: *1, Aleea Meseriasilor, Bloc C93, Etaj 2, Ap.16, Sector 6, 061647-Bucharest, ROMANIA*

Tel : ++4021 413 5902, Fax: ++4031 815 6441, ++4031 816 5216

ε-mail: romania@valiadis.gr -http:// www.ac-motors.eu

VALIADIS S.A.

ELECTRIC MOTOR TEST REPORT - THREE PHASE INDUCTION MOTOR

NAMEPLATE DATA		IEC	**TYPE**	400	**KW**	495	**RPM**
KHV450-12	**FRAME**	3	**PHASE**	3300	**VOLTS**	50	**HZ / CYCLES**
95,0	**EFFICIENCY**	103,8	**AMPS**	55	**IP**	IC411	**IC**
12	**POLE**	S1	**DUTY**	0,710	**PF**	N/A	**EFF2**
VALIADIS	**MANUFACTURER**		**SERIAL NO**	F	**INS.CLASS**	STAR	**CONNECTION**

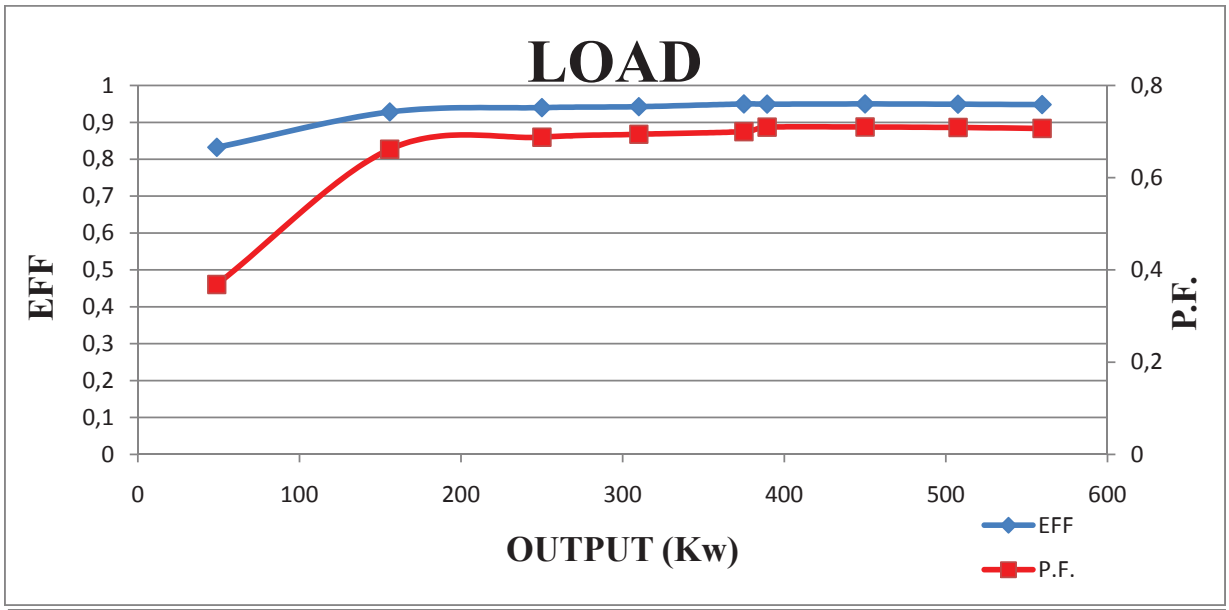

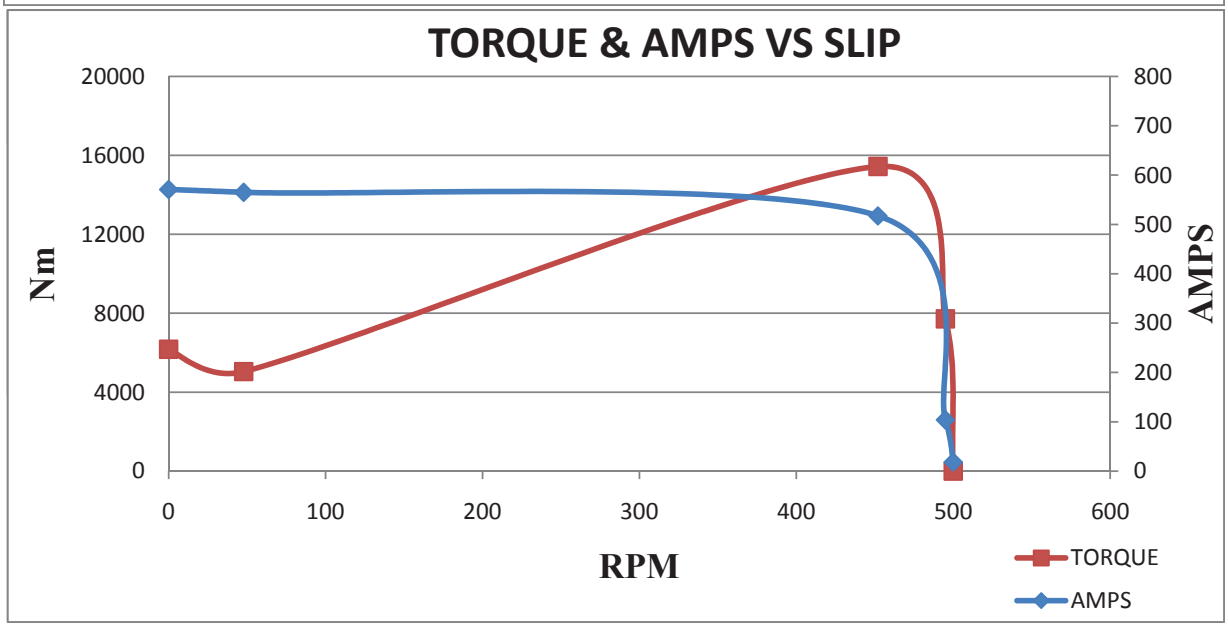

VALIADIS S.A.	**SCALE**	N/A		
	DATE		**REV**	
KHV450-12	**DRAWN**		**DOCUMENT NO.**	
450 kW	**APPRVD**			
3300 VOLTS 50 Hz	**CHECKED**			

MOTOR TYPE : KHV500-12
MOUNTING : V1

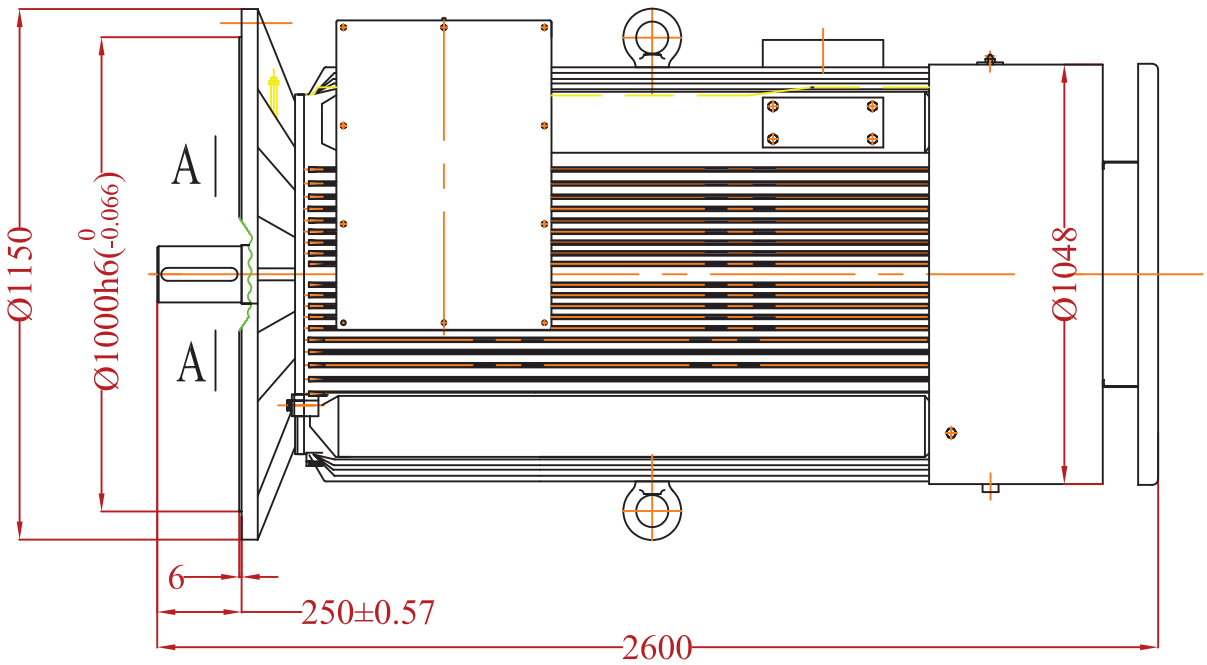

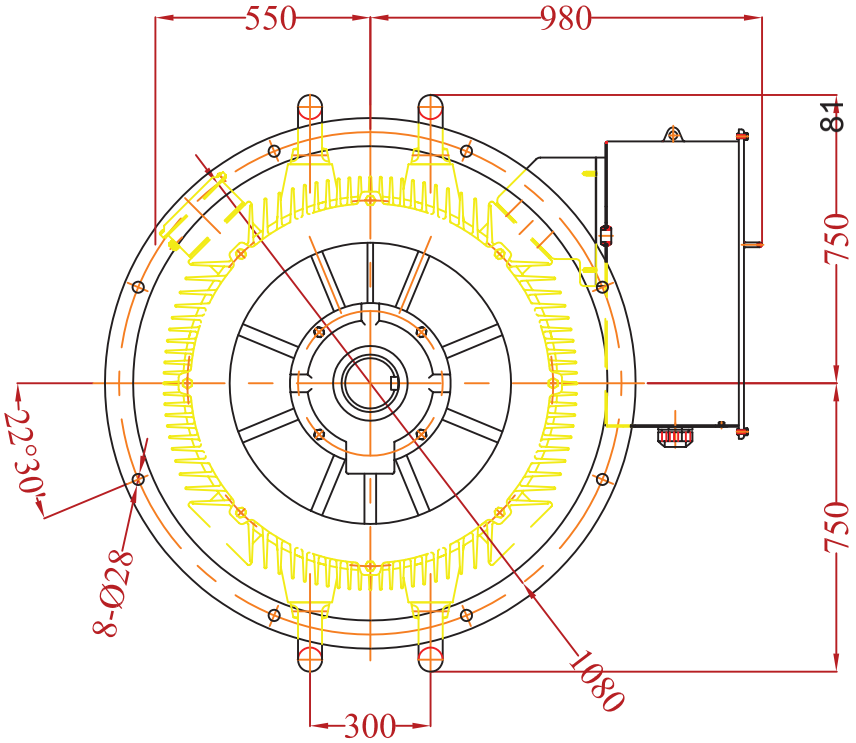

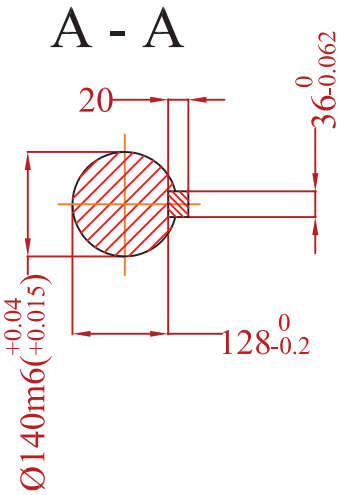

				Date	Signature
			Designed by	09/12/15	St.Karageorgis
			Checked by		
			Examine by		
Change	Date	Name	SCALE		

VALIADIS
HELLENIC MOTORS

Motor Type :KHV500
Mounting :V1
PRELIMINARY DRAWING

Design Number :
MTKHV-151209-1

Replaced from

Replace the

VALIADIS S.A.

Hellenic Motors

Quality Assurance Certificate EN ISO 9001:2008

Certificate Reg.No. 04100970683

08/12/2015

DATA SHEET
FOR THREE PHASE ELECTRIC MOTOR
500KW / 12 POLES / MOUNTING V1 / 3300 V

ORIGIN	GREECE
MANUFACTURER	VALIADIS S.A.
STANDARDS	IEC 34-1
MOTOR TYPE	KHV500 –12
KIND OF MOTOR	ASYNCHRONOUS THREE PHASE , SQUIRREL CAGE
RATED VOLTAGE	3300 **V ± 5%**
CONNECTION	Y (STAR)
STARTING	DOL
RATED CURRENT	129.7 **A**
RATED POWER	500 **KW**
DUTY TYPE	S1
SERVICE FACTOR	1.0
POWER FACTOR 4/4	0.71 **(cos φ)**
EFFICIENCY 4/4	95 **(%)**
RATED SPEED	495 **min^{-1}**
RATED FREQUENCY	50 **Hz ± 2%**
RATED TORQUE	9646.5 **Nm**
BREAKDOWN TORQUE	200 %
LOCKED ROTOR TORQUE	80 %
LOCKED ROTOR CURRENT	550 %
CLASS OF INSULATION	F
DEGREE OF PROTECTION	**IP** 55
WEIGHT OF MACHINE	8100 **kg**
COOLING	IC 411
MOUNTING TYPE	V1
NOISE LEVEL	87 dBA
TEMPERATURE RISE	80 ◦C
AMBIENT TEMPERATURE	-20 ◦C +40 ◦C
ALTITUDE OF SIDE	Max. 1000 m ABOVE SEA LEVEL
LUBRICATION	GREASE
THERMAL PROTECTION	6XPT100 FOR STATOR & 2XPT100 (ONE PER BEARING
ADDITIONAL FEATURES	a. DIF. CT INCLUDED IN THE T/BOX
	b. COPPER ROTOR

ATHENS : *18, Gr. Labraki Str., 141 23 Likovrisi Tel : +30210-2817217, Fax : +30210-2814277*

THESSALONIKI *: INDUSTRIAL ARE OF SINDOS., O.T. 48B, 15η STREET, 570 22 Tel :+302310–796646, Fax :+302310–796645*

e-mail : valiadis@valiadis.gr – http : //www.valiadis.gr

ROMANIA: *1, Aleea Meseriasilor, Bloc C93, Etaj 2, Ap.16, Sector 6, 061647-Bucharest, ROMANIA*

Tel : ++4021 413 5902, Fax: ++4031 815 6441, ++4031 816 5216

ε-mail: romania@valiadis.gr -http:// www.ac-motors.eu

VALIADIS S.A.

ELECTRIC MOTOR TEST REPORT - THREE PHASE INDUCTION MOTOR

NAMEPLATE DATA		IEC	**TYPE**	500	**KW**	495	**RPM**
KHV500-12	**FRAME**	3	**PHASE**	3300	**VOLTS**	50	**HZ / CYCLES**
95,0	**EFFICIENCY**	129,7	**AMPS**	55	**IP**	IC411	**IC**
12	**POLE**	S1	**DUTY**	0,710	**PF**	N/A	**EFF2**
VALIADIS	**MANUFACTURER**		**SERIAL NO**	F	**INS.CLASS**	STAR	**CONNECTION**

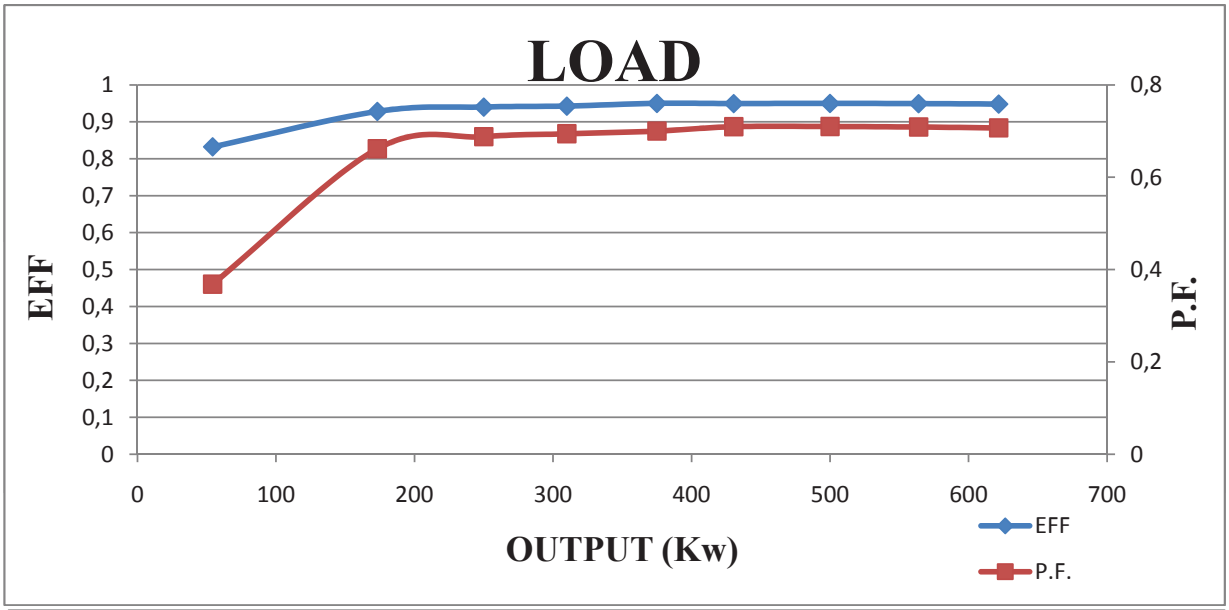

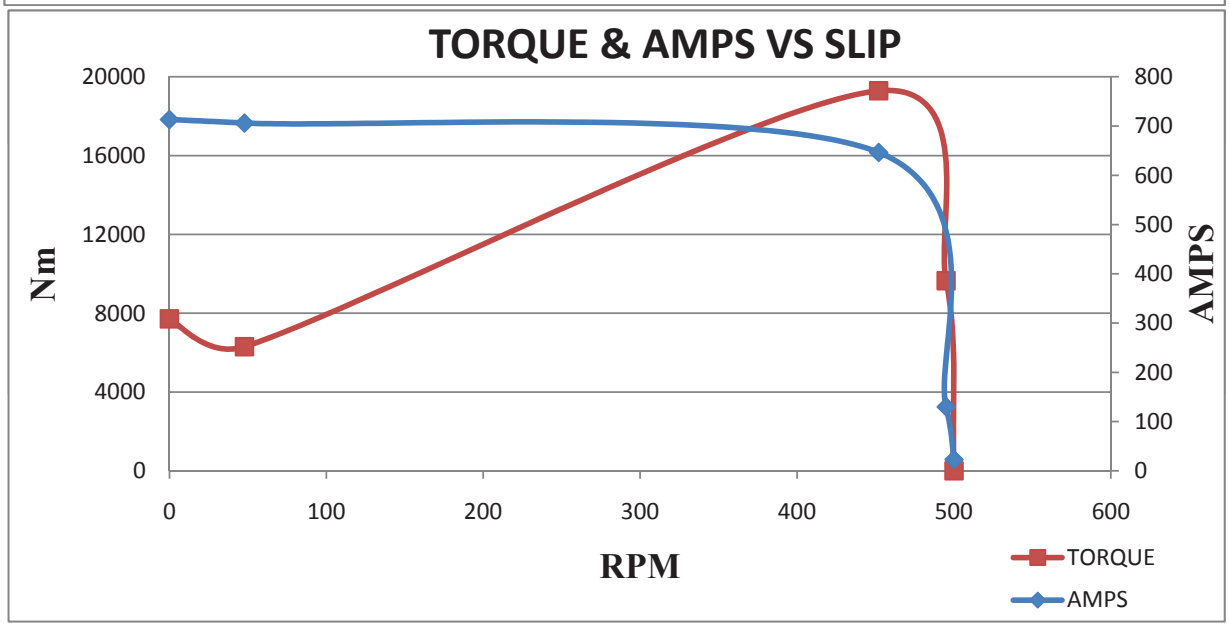

VALIADIS S.A.	**SCALE**	N/A		
	DATE		**REV**	
KHV500-12	**DRAWN**		**DOCUMENT NO.**	
500 kW	**APPRVD**			
3300 VOLTS 50 Hz	**CHECKED**			

VALIADIS
HELLENIC MOTORS

ATHENS: 18, Gr. Lambraki Str., 141 23 Likovrisi – tel: +30 2102817217, fax : +30 2102814277
THESSALONIKI: Industrial Area of Sindos., O.T. 48B, 15th Str., 570 22
tel :+30 2310796646 – fax: +30 2310796645
e-mail: valiadis@valiadis.gr – https://www.valiadis.gr
ROMANIA: 1, Aleea Meseriasilor, Bloc C93, Etaj 2, Ap. 16, Sector 6, 061647-Bucharest
tel: +40 214135902 – e-mail: romania@valiadis.gr – https://www.ac-motors.eu