VALIADIS
HELLENIC MOTORS

K series Three-phase Asynchronous Motors

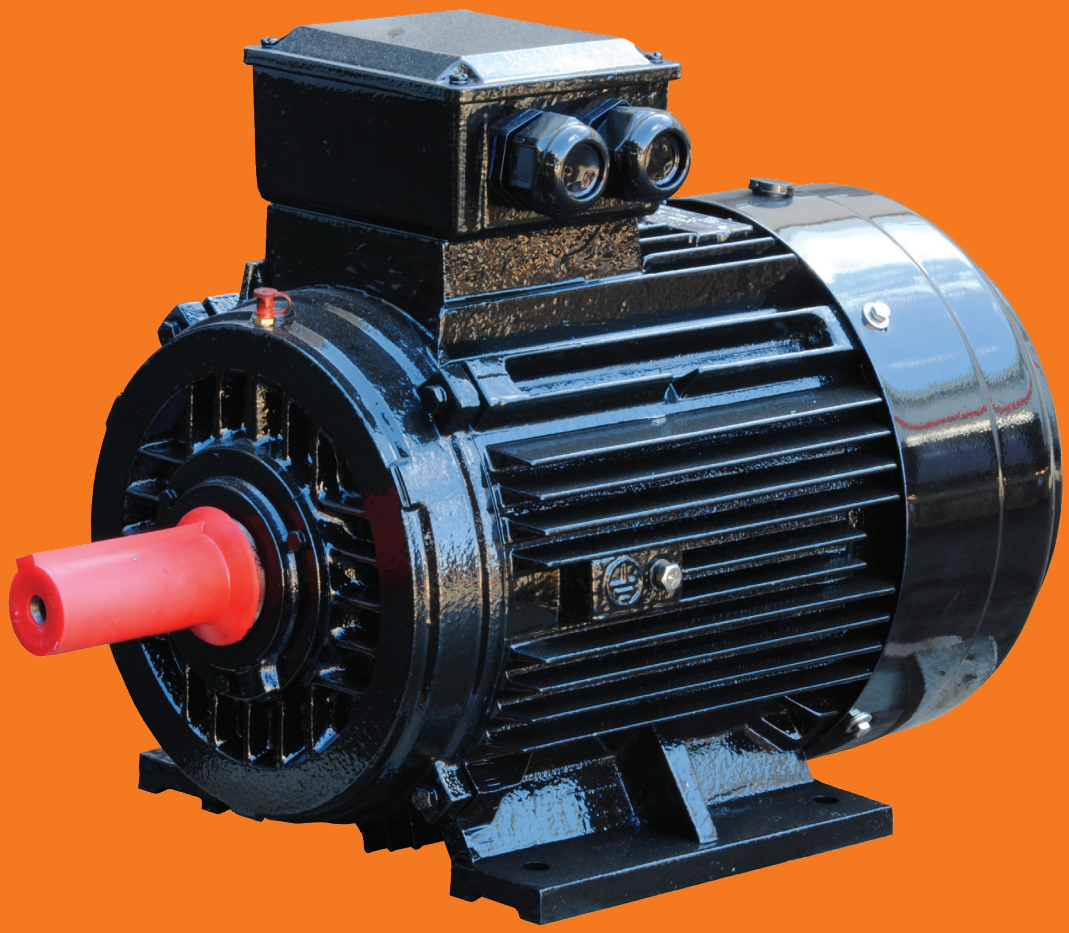

Efficiency IE5

VALIADIS
HELLENIC MOTORS
SINCE 1927

VALIADIS S.A.
HELLENIC MOTORS
Quality Assurance Certificate en iso 9001:2015
Certificate Reg. No. 041130055

K-series

IE5 SUPER PREMIUM EFFICIENCY

ACCORDING IEC 80 - 355

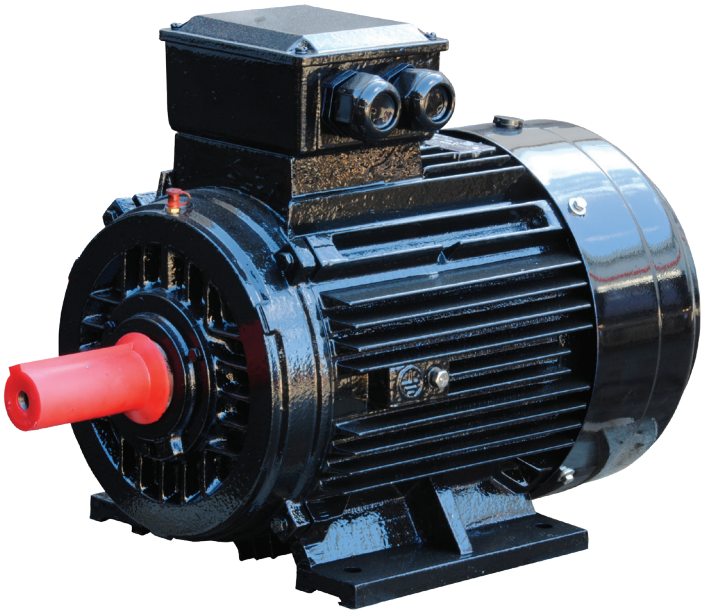

Applications

- Fans
- Pumps
- Gears
- Compressors
- Textiles
- Food industry

Standard features

- Industrial series of cast-iron housing motors
- IP55 protection degree
- Insulation class F, temperature rise 80°C
- Removable feet with the possibility of right and left hand side terminal box
- Terminal box rotation at 180°
- SKF or NSK bearings
- Cast iron housing for the bearing

Optional features

- Special voltages and frequency
- Class H insulation
- Brake kits for all motors
- Forced cooling for constant torque operation through frequency inverter
- IP56 / IP65 protection
- PTC / PT100 in the winding
- Frame reduced motors (non-IEC)
- Anticondensation heaters
- Roller bearings on drive end
- Double shaft
- Cable execution (with terminal box or directly connected)
- Epoxy raisin encapsulated terminal box
- Epoxy raisin encapsulated winding
- Silicon encapsulated terminal box

K-Series - IE5

Three-phase motors with squirrel cage, protection degree IP55

2pole-3000rpm

synchronous speed 50Hz
380-420/220-240 V Y/Δ 50 Hz
660-725/380-420 V Y/Δ 50 Hz
Insulation Class F

	POWER	SPEED	RATED CURRENT (380V)	RATED CURRENT (400V)	RATED CURRENT (415V)	RATED CURRENT (525V)	EFF	POWER FACTOR	RATED TORQUE	STARTING TORQUE RATIO	BREAK-DOWN TORQUE RATIO	STARTING CURRENT RATIO	MOMENT OF INERTIA GD²/4	NOISE LEVEL LW	NET WEIGHT
TYPE	kW	rpm	A	A	A	A	%	cosφ	N.m	Mp/Mn	Mm/Mn	Ip/In	kgm²	dB(A)	kg
K80-2	0.75	2900	1.5	1.5	1.4	1.1	86.3	0.82	2.5	2.2	2.7	8.0	0.0015	62	18
K80-2	1.1	2905	2.3	2.2	2.1	1.7	87.8	0.82	3.6	2.2	2.7	8.0	0.003	62	24
K90S-2	1.5	2940	3.0	2.9	2.8	2.2	88.9	0.85	4.9	2.3	2.7	8.0	0.0033	67	25
K90L-2	2.2	2940	4.3	4.0	3.9	3.1	90.2	0.85	7.1	2.3	2.7	8.0	0.0041	67	31
K100L-2	3	2945	5.8	5.5	5.3	4.2	91.1	0.87	9.7	2.3	2.7	8.0	0.01	74	41
K112M-2	4	2945	7.5	7.1	6.9	5.4	91.8	0.88	13.0	2.4	2.7	8.0	0.013	77	48
K132S-2	5.5	2945	10.3	9.7	9.4	7.4	92.6	0.88	17.8	2.0	2.7	8.0	0.03	79	86
K132S-2	7.5	2945	13.7	13.0	12.6	9.9	93.3	0.89	24.3	2.0	2.7	8.2	0.037	79	95
K160M-2	11	2965	20.0	19.0	18.3	14.5	94.0	0.89	35.4	2.2	2.7	8.0	0.078	81	125
K160M-2	15	2965	27.1	25.7	24.8	19.6	94.5	0.89	48.3	2.2	2.7	8.5	0.095	81	161
K160L-2	18.5	2965	33.3	31.6	30.5	24.1	94.9	0.89	59.6	2.2	2.7	8.5	0.11	81	167
K180M-2	22	2970	39.5	37.5	36.2	28.6	95.1	0.89	70.7	2.2	2.7	8.0	0.19	83	237
K200L-2	30	2975	53.6	50.9	49.1	38.8	95.5	0.89	96.3	2.2	2.8	8.0	0.29	84	350
K200L-2	37	2975	65.9	62.6	60.4	47.7	95.8	0.89	118.8	2.2	2.8	8.0	0.36	84	399
K225M-2	45	2975	80.0	76.0	73.3	57.9	96.0	0.89	144.5	2.2	2.7	8.5	0.46	86	420
K250M-2	55	2980	97.6	92.7	89.4	70.6	96.2	0.89	176.3	2.0	2.7	7.5	1.1	89	472
K280S-2	75	2980	132.7	126.0	121.5	96.0	96.5	0.89	240.4	2.1	2.7	7.5	1.9	91	649
K280M-2	90	2980	159.1	151.1	145.6	115.1	96.6	0.89	288.4	2.0	2.7	7.2	2.29	91	708
K315S-2	110	2985	191.8	182.2	175.7	138.9	96.8	0.9	351.9	2.0	2.8	7.5	3.05	92	1292
K315M-2	132	2985	230.0	218.5	210.6	166.5	96.9	0.9	422.3	2.0	2.8	7.5	3.41	92	1349
K315L-2	160	2985	278.5	264.5	255.0	201.6	97.0	0.9	511.9	2.2	2.8	8.5	4.12	92	1397
K315L-2	185	2985	317.8	301.9	291.0	230.0	97.2	0.91	591.9	2.2	2.8	8.5	4.53	92	1435
K315L-2	200	2985	343.6	326.4	314.6	248.7	97.2	0.91	639.9	2.2	2.8	8.5	4.87	92	1444
K355M-2	220	2990	377.9	359.0	346.0	273.5	97.2	0.91	702.7	2.0	2.8	8.5	4.4	100	1700
K355M-2	250	2990	429.4	408.0	393.2	310.8	97.2	0.91	798.5	2.0	2.8	8.5	4.8	100	1780
K355L-2	280	2990	481.0	456.9	440.4	348.1	97.2	0.91	894.3	2.0	2.8	8.5	5.0	100	1950
K355L-2	315	2990	541.1	514.0	495.5	391.6	97.2	0.91	1006.1	2.0	2.8	8.5	5.6	104	2150
K355L-2	355	2990	609.8	579.3	558.4	441.4	97.2	0.91	1133.9	2.0	2.8	8.5	5.9	104	2260
K355L-2	400	2990	687.1	652.7	629.2	497.3	97.2	0.91	1277.6	2.0	2.8	8.5	6.2	104	2340

K-Series - IE5

Three-phase motors with squirrel cage, protection degree IP55

4pole-1500rpm

synchronous speed 50Hz
380-420/220-240 V Y/Δ 50 Hz
660-725/380-420 V Y/Δ 50 Hz
Insulation Class F

	POWER	SPEED	RATED CURRENT (380V)	RATED CURRENT (400V)	RATED CURRENT (415V)	RATED CURRENT (525V)	EFF	POWER FACTOR	RATED TORQUE	STARTING TORQUE RATIO	BREAK-DOWN TORQUE RATIO	STARTING CURRENT RATIO	MOMENT OF INERTIA GD²/4	NOISE LEVEL LW	NET WEIGHT
TYPE	kW	rpm	A	A	A	A	%	cosφ	N.m	Mp/Mn	Mm/Mn	Ip/In	kgm²	dB(A)	kg
K80-4	0.75	1450	1.7	1.6	1.6	1.2	88.2	0.75	4.9	2.4	2.7	7.8	0.0055	56	18
K90L-4	1.1	1470	2.4	2.3	2.2	1.8	89.5	0.75	7.1	2.4	2.7	8.5	0.0049	59	27
K90S-4	1.5	1470	3.2	3.1	3.0	2.3	90.4	0.77	9.7	2.3	2.7	8.5	0.0056	59	30
K100L-4	2.2	1470	4.6	4.4	4.2	3.4	91.4	0.78	14.3	2.4	2.7	8.5	0.019	64	42
K100L-4	3	1485	6.2	5.9	5.7	4.5	92.1	0.78	19.3	2.4	2.8	9.0	0.029	64	56
K112M-4	4	1485	8.2	7.8	7.5	5.9	92.8	0.8	25.7	2.4	2.8	9.0	0.039	65	78
K132S-4	5.5	1485	11.2	10.6	10.2	8.1	93.4	0.8	35.4	2.0	2.7	8.5	0.092	71	93
K132M-4	7.5	1490	15.0	14.2	13.7	10.8	94.0	0.81	48.1	2.4	2.7	9.0	0.099	71	97
K160M-4	11	1490	21.3	20.2	19.5	15.4	94.6	0.82	70.5	2.1	2.7	9.0	0.19	73	128
K160L-4	15	1490	28.5	27.1	26.1	20.7	95.1	0.84	96.1	2.0	2.7	9.0	0.21	73	165
K180M-4	18.5	1485	34.7	33.0	31.8	25.1	95.3	0.84	119.0	2.4	2.8	9.0	0.29	76	219
K180L-4	22	1485	41.2	39.1	37.7	29.8	95.5	0.84	141.5	2.2	2.8	9.0	0.34	76	239
K200L-4	30	1485	55.9	53.1	51.2	40.5	95.9	0.85	192.9	2.4	2.8	8.5	0.73	76	343
K225S-4	37	1485	68.0	64.6	62.3	49.2	96.1	0.85	237.9	2.4	2.7	8.5	0.87	78	385
K225M-4	45	1485	82.6	78.4	75.6	59.8	96.3	0.85	289.4	2.4	2.7	9.0	0.96	78	410
K250M-4	55	1490	100.7	95.7	92.2	72.9	96.5	0.85	352.5	2.0	2.7	8.0	1.69	79	528
K280S-4	75	1490	135.5	128.7	124.0	98.0	96.7	0.87	480.7	2.1	2.7	8.0	4.1	80	736
K280M-4	90	1490	160.4	152.3	146.8	116.1	96.9	0.88	576.8	2.1	2.7	8.0	5.37	80	754
K315S-4	110	1490	193.6	183.9	177.3	140.1	97.0	0.89	705.0	2.0	2.7	8.5	5.9	88	1140
K315M-4	132	1490	232.1	220.5	212.5	168.0	97.1	0.89	846.0	2.2	2.8	9.0	6.49	88	1479
K315L-4	160	1490	277.9	264.0	254.5	201.1	97.2	0.9	1025.5	1.9	2.7	8.5	7.89	88	1536
K315L-4	185	1490	320.7	304.6	293.6	232.1	97.4	0.9	1185.7	1.9	2.7	8.5	8.32	88	1587
K315L-4	200	1490	346.7	329.3	317.4	250.9	97.4	0.9	1281.9	1.9	2.7	8.5	9.15	88	1589
K355M-4	220	1490	382.1	363.0	349.9	276.6	97.2	0.9	1410.1	2.0	2.6	8.5	9.9	92	1960
K355M-4	250	1490	434.2	412.5	397.6	314.3	97.2	0.9	1602.3	2.0	2.6	8.5	10.2	92	2080
K355L-4	280	1490	486.3	462.0	445.3	352.0	97.2	0.9	1794.6	2.0	2.6	8.5	11.6	92	2190
K355L-4	315	1490	547.1	519.7	501.0	396.0	97.2	0.9	2019.0	2.0	2.6	8.5	12.8	92	2350
K355L-4	355	1490	623.5	592.3	570.9	451.3	97.2	0.9	2275.3	2.0	2.6	8.5	13.4	92	2520
K355L-4	400	1490	710.5	675.0	650.6	514.3	97.2	0.9	2563.8	2.0	2.6	8.5	14.2	92	2680

K-Series - IE5

Three-phase motors with squirrel cage, protection degree IP55

6pole-1000rpm

synchronous speed 50Hz
380-420/220-240 V Y/Δ 50 Hz
660-725/380-420 V Y/Δ 50 Hz
Insulation Class F

	POWER	SPEED	RATED CURRENT (380V)	RATED CURRENT (400V)	RATED CURRENT (415V)	RATED CURRENT (525V)	EFF	POWER FACTOR	RATED TORQUE	STARTING TORQUE RATIO	BREAK-DOWN TORQUE RATIO	STARTING CURRENT RATIO	MOMENT OF INERTIA GD²/4	NOISE LEVEL LW	NET WEIGHT
TYPE	kW	rpm	A	A	A	A	%	cosφ	N.m	Mp/Mn	Mm/Mn	Ip/In	kgm²	dB(A)	kg
K90S-6	0.75	980	1.9	1.8	1.7	1.4	85.7	0.7	7.3	2.2	2.7	7.6	0.0086	57	25
K90L-6	1.1	980	2.7	2.6	2.5	2.0	87.2	0.71	10.7	2.2	2.7	7.5	0.0098	57	29
K100L-6	1.5	980	3.6	3.4	3.3	2.6	88.4	0.71	14.6	2.2	2.7	9.0	0.026	61	44
K112M-6	2.2	980	5.2	5.0	4.8	3.8	89.7	0.71	21.4	2.0	2.7	7.2	0.038	65	66
K132S-6	3	985	7.1	6.7	6.5	5.1	90.6	0.71	29.1	2.0	2.7	7.5	0.077	69	57
K132M-6	4	985	9.2	8.8	8.5	6.7	91.4	0.72	38.8	2.2	2.7	7.5	0.09	69	65
K132M-6	5.5	985	12.6	12.0	11.5	9.1	92.2	0.72	53.3	2.1	2.7	7.5	0.11	69	95
K160M-6	7.5	985	16.1	15.3	14.8	11.7	92.9	0.75	72.7	2.0	2.7	7.5	0.23	73	161
K160L-6	11	985	22.9	21.7	20.9	16.6	93.7	0.76	106.6	2.0	2.7	7.5	0.26	73	183
K180L-6	15	990	30.6	29.1	28.0	22.1	94.3	0.77	144.7	2.2	2.8	9.0	0.52	73	205
K200L-6	18.5	990	37.1	35.3	34.0	26.9	94.6	0.8	178.5	2.1	2.7	7.5	0.64	73	318
K200L-6	22	990	43.5	41.3	39.8	31.5	94.9	0.8	212.2	2.2	2.7	8.5	0.74	73	352
K225M-6	30	990	58.3	55.4	53.4	42.2	95.3	0.81	289.4	2.2	2.7	8.0	1.37	74	323
K250M-6	37	990	70.8	67.3	64.9	51.3	95.6	0.83	356.9	2.2	2.7	8.0	2.51	76	469
K280S-6	45	990	84.0	79.8	76.9	60.8	95.8	0.85	434.1	2.2	2.7	9.0	4.09	78	743
K280M-6	55	990	101.2	96.2	92.7	73.3	96.0	0.85	530.6	2.2	2.7	7.5	4.65	78	708
K315S-6	75	995	140.9	133.8	129.0	102.0	96.3	0.84	719.8	2.1	2.8	8.5	9.06	83	1235
K315M-6	90	995	166.7	158.4	152.7	120.7	96.5	0.84	863.8	2.2	2.8	9.0	10.54	83	1378
K315L-6	110	995	203.5	193.4	186.4	147.3	96.6	0.84	1055.8	2.2	2.8	9.0	11.04	83	1430
K315L-6	132	995	240.9	228.9	220.6	174.4	96.8	0.84	1267	2.1	2.8	8.5	12.05	83	1517
K355M-6	160	995	291.4	276.8	266.8	210.9	97.0	0.86	1535.7	1.9	2.4	8.0	12.9	85	1760
K355M-6	185	995	337.0	320.1	308.5	243.9	97.0	0.86	1775.6	1.9	2.4	8.0	13.4	85	1810
K355M-6	200	995	364.3	346.1	333.6	263.7	97.0	0.86	1919.6	1.9	2.4	8.0	13.9	85	1960
K355L-6	220	995	400.7	380.7	366.9	290.0	97.0	0.86	2111.6	1.9	2.4	7.8	14.4	85	2150
K355L-6	250	995	455.3	432.6	416.9	329.6	97.0	0.86	2399.5	1.9	2.4	7.8	14.8	91	2340
K355L-6	280	995	510.0	484.5	467.0	369.1	97.0	0.86	2687.4	1.9	2.4	7.8	15.2	91	2460
K355L-6	315	995	573.7	545.0	525.3	415.3	97.0	0.86	3023.4	1.9	2.4	7.8	15.8	91	2580

K-Series - IE5

Three-phase motors with squirrel cage, protection degree IP55

8pole-750rpm

synchronous speed 50Hz
380-420/220-240 V Y/Δ 50 Hz
660-725/380-420 V Y/Δ 50 Hz
Insulation Class F

	POWER	SPEED	RATED CURRENT (380V)	RATED CURRENT (400V)	RATED CURRENT (415V)	RATED CURRENT (525V)	EFF	POWER FACTOR	RATED TORQUE	STARTING TORQUE RATIO	BREAK-DOWN TORQUE RATIO	STARTING CURRENT RATIO	MOMENT OF INERTIA GD²/4	NOISE LEVEL LW	NET WEIGHT
TYPE	kW	rpm	A	A	A	A	%	cosφ	N.m	Mp/Mn	Mm/Mn	Ip/In	kgm²	dB(A)	kg
K100L-8	0.75	715	2.1	2.0	1.9	1.5	82.0	0.67	10.0	2.0	2.5	5.0	0.015	59	40
K100L-8	1.1	720	3.0	2.8	2.7	2.1	84.0	0.67	14.6	2.0	2.5	5.5	0.022	59	44
K112M-8	1.5	720	3.9	3.7	3.5	2.8	85.5	0.69	19.9	2.0	2.5	5.0	0.029	61	62
K132S-8	2.2	730	5.6	5.3	5.1	4.0	87.2	0.69	28.8	2.0	2.6	5.5	0.062	64	55
K132M-8	3	730	7.3	6.9	6.6	5.3	88.4	0.71	39.2	2.0	2.6	5.5	0.077	64	78
K160M-8	4	735	9.6	9.1	8.8	6.9	89.4	0.71	52.0	2.0	2.5	5.5	0.13	68	144
K160M-8	5.5	735	12.8	12.2	11.8	9.3	90.4	0.72	71.5	2.0	2.5	5.5	0.17	68	157
K160L-8	7.5	735	17.1	16.2	15.7	12.4	91.3	0.72	97.4	2.0	2.5	5.5	0.23	68	171
K180L-8	11	740	24.8	23.6	22.7	18.0	92.2	0.73	142.0	2.0	2.5	7.5	0.35	70	209
K200L-8	15	740	33.2	31.5	30.4	24.0	92.9	0.73	193.6	2.0	2.5	7.5	0.64	73	333
K225S-8	18.5	740	40.2	38.2	36.8	29.1	93.3	0.75	238.8	2.0	2.6	7.5	1.11	73	299
K225M-8	22	740	47.0	44.6	43.0	34.0	93.6	0.76	283.9	2.0	2.6	7.5	1.37	73	318
K250M-8	30	745	62.9	59.8	57.6	45.5	94.1	0.77	384.6	2.1	2.5	8.0	2.35	75	404
K280S-8	37	745	76.3	72.5	69.9	55.3	94.4	0.78	474.3	2.1	2.5	8.0	4.229	76	714
K280M-8	45	745	91.4	86.8	83.7	66.1	94.7	0.79	576.8	2.0	2.5	7.5	5.87	76	736
K315S-8	55	745	110.1	104.6	100.8	79.7	94.9	0.79	705.0	2.0	2.6	7.5	8.86	82	1188
K315M-8	75	745	149.5	142.0	136.9	108.2	95.3	0.8	961.4	2.0	2.6	6.5	10.54	82	1283
K315L-8	90	745	176.8	167.9	161.9	128.0	95.5	0.8	1153.7	2.0	2.6	7.0	12.52	82	1330
K315L-8	110	745	215.6	204.8	197.4	156.1	95.7	0.8	1410	2.0	2.5	7.0	15.12	82	1401
K355M-8	132	745	258.2	245.3	236.4	186.9	95.9	0.81	1692	1.8	2.4	6.5	12.9	89	1840
K355M-8	160	745	315.6	300	286.0	226.0	96.1	0.81	2051	1.8	2.4	6.5	13.9	89	1990
K355L-8	185	745	363.8	345.6	330.3	261.1	96.2	0.81	2371	1.8	2.4	6.5	14.2	89	2150
K355L-8	200	745	393.2	373.6	356.7	282.0	96.3	0.81	2564	1.8	2.4	6.5	14.9	89	2450
K355L-8	220	745	432.6	411	392.4	310.2	96.3	0.81	2820	1.8	2.4	6.5	15.3	89	2530
K355L-8	250	745	491.6	467	445.9	352.5	96.3	0.81	3205	1.8	2.4	6.5	16.0	89	2650

K-Series - IE5

Dimensions Foot Mount B3

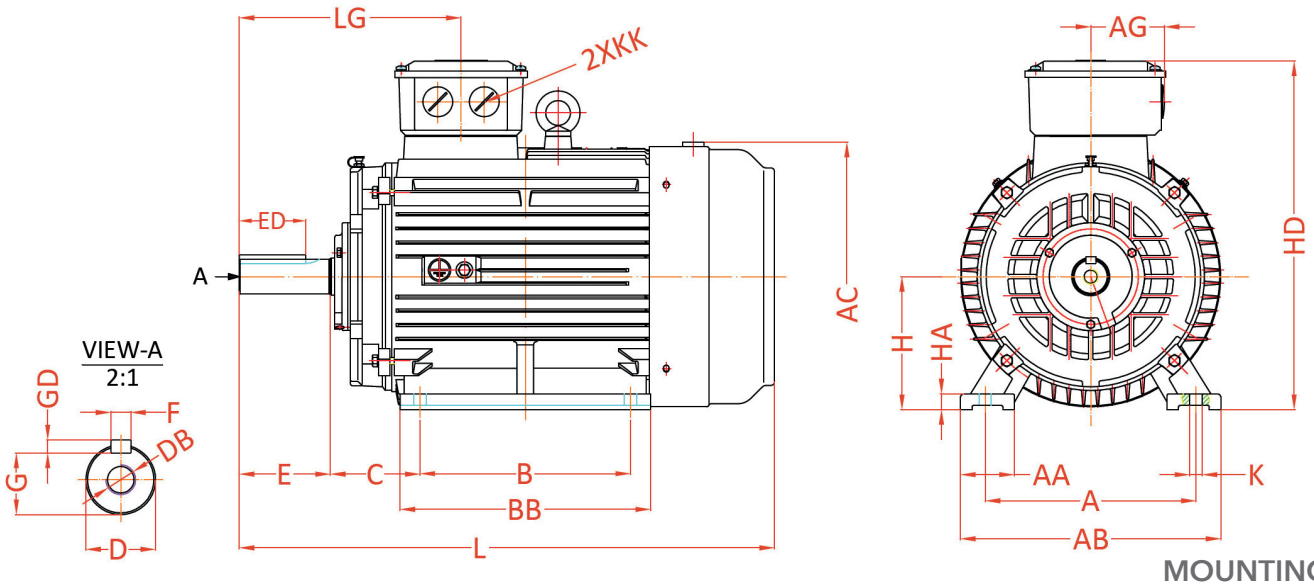

MOUNTING B3
SIZE 80-355

FRAME	Poles	A	AA	AB	AC	AG	B	BB	C	D	DB	E	ED	F	G	GD	H	HA	HD	K	KK	L	LG
K80M	2-8	125	34	165	185	51	100	142	50	19	M6X16	40	22	6	15.5	6	80	10	250	10	M24X1.5	351	115
K90S	2-8	140	36	180	215	60	100	180	56	24	M8X19	50	32	8	20	7	90	12.5	275	10	M24X1.5	390	129
K90L	2-8	140	36	180	220	60	125	210	56	24	M8X19	50	32	8	20	7	90	12.5	280	10	M24X1.5	430	129
K100L	2-8	160	40	205	230	60	140	233	63	28	M10X22	60	40	8	24	7	100	14	295	12	M24X1.5	484	147
K112M	2-8	190	45	230	256	75	140	252	70	28	M10X22	60	40	8	24	7	112	14	330	12	M30X2	521	144
K132S	2-8	216	52	270	285	75	140	204	89	38	M12X28	80	56	10	33	8	132	16	365	12	M30X2	527	250
K132M	2-8	216	52	270	285	75	178	242	89	38	M12X28	80	56	10	33	8	132	16	365	12	M30X2	565	250
K160M	2-8	254	67	320	355	95	210	305	108	42	M16X36	110	80	12	37	8	160	19	455	14.5	M36X2	712	270
K160L	2-8	254	67	320	355	95	254	325	108	42	M16X36	110	80	12	37	8	160	19	455	14.5	M36X2	734	270
K180M	2-8	279	70	345	415	120	241	420	121	48	M16x36	110	80	14	42.5	9	180	22	510	14.5	M48x2	863	288
K180L	2-8	279	70	345	415	120	279	420	121	48	M16x36	110	80	14	42.5	9	180	22	510	14.5	M48x2	868	288
K200L	2-8	318	70	390	455	120	305	490	133	55	M20x42	110	90	16	49	10	200	25	550	18.5	M48x2	959	298
K225S	4-8	356	75	435	510	160	286	475	149	60	M20x42	140	100	18	53	11	225	28	770	18.5	M64x2	1008	350
K225M	2	356	75	435	510	160	311	475	149	55	M20x42	110	80	16	49	10	225	28	770	18.5	M64x2	988	320
K225M	4-8	356	75	435	510	160	311	475	149	60	M20x42	140	100	18	53	11	225	28	770	18.5	M64x2	1018	350
K250M	2	406	80	485	555	160	349	515	168	60	M20x42	140	100	18	53	11	250	33	770	24	M64x2	1071	350
K250M	4-8	406	80	485	555	160	349	515	168	65	M20x42	140	100	18	58	11	250	33	770	24	M64x2	1071	350
K280S	2	457	85	550	645	160	368	554	190	65	M20x42	140	100	18	58	11	280	35	885	24	M64x2	1098	350
K280S	4-8	457	85	550	645	160	368	554	190	75	M20x42	140	100	20	67.5	12	280	35	885	24	M64x2	1112	350
K280M	2	457	85	550	645	160	419	554	190	65	M20x42	140	100	18	58	11	280	35	885	24	M64x2	1118	350
K280M	4-8	457	85	550	645	160	419	554	190	75	M20x42	140	100	20	67.5	12	280	35	885	24	M64x2	1132	350
K315S	2	508	120	635	705	330	406	790	216	65	M20x42	140	100	18	58	11	315	35	938	28	M72x2	1539	387
K315M	2	508	120	635	705	330	457	790	216	65	M20x42	140	100	18	58	11	315	35	938	28	M72x2	1539	387
K315L	2	508	120	635	705	330	508	790	216	65	M20x42	140	100	18	58	11	315	35	938	28	M72x2	1539	387
K315S	4-8	508	120	635	705	330	406	790	216	80	M20x42	170	130	22	71	14	315	35	938	28	M72x2	1612	417
K315M	4-8	508	120	635	705	330	457	790	216	80	M20x42	170	130	22	71	14	315	35	938	28	M72x2	1612	417
K315L	4-8	508	120	635	705	330	508	790	216	80	M20x42	170	130	22	71	14	315	35	938	28	M72x2	1612	417
K355M	2	610	125	735	735	260	560	775	254	75	M24X50	140	110	20	67.5	12	355	49	1000	28	M72x2	1600	415
K355L	2	610	125	735	735	260	630	775	254	75	M24X50	140	110	20	67.5	12	355	49	1000	28	M72x2	1490	415
K355M	4-8	610	125	735	735	260	560	775	254	100	M24X50	210	160	28	90	16	355	49	1000	28	M72x2	1670	445
K355L	4-8	610	125	735	735	260	630	775	254	100	M24X50	210	160	28	90	16	355	49	1000	28	M72x2	1570	445
K355L*	2	610	125	735	735	260	630	875	254	75	M24X50	140	110	20	67.5	12	355	49	1000	28	M72x2	1600	415
K355L*	4-8	610	125	735	735	260	630	875	254	100	M24X50	210	160	28	90	16	355	49	1000	28	M72x2	1670	445

1. The dimension of 'L' with tolerance +-5 for frame 80-132,tolerance +-8 for frame 160-355.

2. AC and L dimensions are the maximum external dimensions, and the details are subject to the confirmed drawings.

VALIADIS
HELLENIC MOTORS

K-Series - IE5

Dimensions Foot-Flange Mount B35

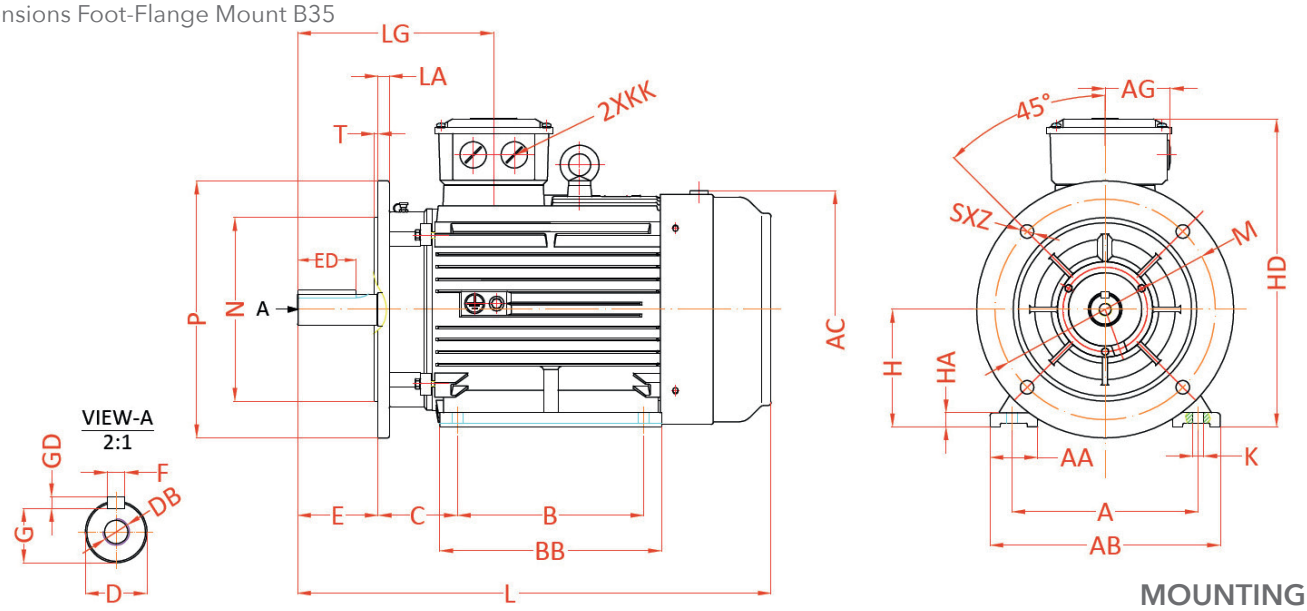

MOUNTING B35
SIZE 80-355

FRAME	Poles	A	AA	AB	AC	AG	B	BB	C	D	DB	E	ED	F	G	GD	H	HA	HD	K	L*	LA	LG	M	N	P	S	T	KK
K80M	2-8	125	34	165	185	51	100	142	50	19	M6X16	40	22	6	15.5	6	80	10	250	10	351	14	115	165	130	200	12	3.5	M24X1.5
K90S	2-8	140	36	180	215	60	100	180	56	24	M8X19	50	32	8	20	7	90	12.5	275	10	390	12	129	165	130	200	12	3.5	M24X1.5
K90L	2-8	140	36	180	220	60	125	210	56	24	M8X19	50	32	8	20	7	90	12.5	280	10	430	12	129	165	130	200	12	3.5	M24X1.5
K100L	2-8	160	40	230	230	60	140	233	63	28	M10X22	60	40	8	24	7	100	14	295	12	484	14	147	215	180	250	14.5	4	M24X1.5
K112M	2-8	190	45	230	256	75	140	252	70	28	M10X22	60	40	8	24	7	112	14	330	12	521	12	144	215	180	250	14.5	4	M30X2
K132S	2-8	216	52	270	285	75	140	204	89	38	M12X28	80	56	10	33	8	132	16	365	12	527	14	250	265	230	300	14.5	4	M30X2
K132M	2-8	216	52	270	285	75	178	242	89	38	M12X28	80	56	10	33	8	132	16	365	12	565	14	250	265	230	300	14.5	4	M30X2
K160M	2-8	254	67	320	355	95	210	305	108	42	M16X36	110	80	12	37	8	160	19	455	14.5	712	15	270	300	250	350	18.5	5	M36X2
K160L	2-8	254	67	320	355	95	254	325	108	42	M16X36	110	80	12	37	8	160	19	455	14.5	734	15	270	300	250	350	18.5	5	M36X2
K180M	2-8	279	70	345	415	120	241	420	121	48	M16x36	110	80	14	42.5	9	180	22	510	14.5	863	15	288	300	250	350	18.5	5	M48x2
K180L	2-8	279	70	345	415	120	279	420	121	48	M16x36	110	80	14	42.5	9	180	22	510	14.5	868	15	288	300	250	350	18.5	5	M48x2
K200L	2-8	318	70	390	455	120	305	490	133	55	M20x42	110	90	16	49	10	200	25	550	18.5	959	17	298	350	300	400	18.5	5	M48x2
K225S	4-8	356	75	435	510	160	286	475	149	60	M20x42	140	100	18	53	11	225	28	770	18.5	1008	19	350	400	350	450	18.5	5	M64x2
K225M	2	356	75	435	510	160	311	475	149	55	M20x42	110	80	16	49	10	225	28	770	18.5	988	19	320	400	350	450	18.5	5	M64x2
K225M	4-8	356	75	435	510	160	311	475	149	60	M20x42	140	100	18	53	11	225	28	770	18.5	1018	19	350	400	350	450	18.5	5	M64x2
K250M	2	406	80	485	555	160	349	515	168	60	M20x42	140	100	18	53	11	250	33	770	24	1071	22	350	500	450	550	18.5	5	M64x2
K250M	4-8	406	80	485	555	160	349	515	168	65	M20x42	140	100	18	58	11	250	33	770	24	1071	22	350	500	450	550	18.5	5	M64x2
K280S	2	457	85	550	645	160	368	554	190	65	M20x42	140	100	18	58	11	280	35	885	24	1098	22	350	500	450	550	18.5	5	M64x2
K280S	4-8	457	85	550	645	160	368	554	190	75	M20x42	140	100	20	67.5	12	280	35	885	24	1112	22	350	500	450	550	18.5	5	M64x2
K280M	2	457	85	550	645	160	419	554	190	65	M20x42	140	100	18	58	11	280	35	885	24	1118	22	350	500	450	550	18.5	5	M64x2
K280M	4-8	457	85	550	645	160	419	554	190	75	M20x42	140	100	20	67.5	12	280	35	885	24	1132	22	350	500	450	550	18.5	5	M64x2
K315S	2	508	120	635	705	330	406	790	216	65	M20x42	140	100	18	58	11	315	35	938	28	1539	24	387	600	550	660	24	6	M72x2
K315M	2	508	120	635	705	330	457	790	216	65	M20x42	140	100	18	58	11	315	35	938	28	1539	24	387	600	550	660	24	6	M72x2
K315L	2	508	120	635	705	330	508	790	216	65	M20x42	140	100	18	58	11	315	35	938	28	1539	24	387	600	550	660	24	6	M72x2
K315S	4-8	508	120	635	705	330	406	790	216	80	M20x42	170	130	22	71	14	315	35	938	28	1612	24	417	600	550	660	24	6	M72x2
K315M	4-8	508	120	635	705	330	457	790	216	80	M20x42	170	130	22	71	14	315	35	938	28	1612	24	417	600	550	660	24	6	M72x2
K315L	4-8	508	120	635	705	330	508	790	216	80	M20x42	170	130	22	71	14	315	35	938	28	1612	24	417	600	550	660	24	6	M72x2
K355M	2	610	125	735	735	260	560	775	254	75	M24X50	140	110	20	67.5	12	355	49	1000	28	1600	25	415	740	680	800	24	6	M72X2
K355L	2	610	125	735	735	260	630	775	254	75	M24X50	140	110	20	67.5	12	355	49	1000	28	1490	25	415	740	680	800	24	6	M72X2
K355M	4-8	610	125	735	735	260	560	775	254	100	M24X50	210	160	28	90	16	355	49	1000	28	1670	25	445	740	680	800	24	6	M72X2
K355L	4-8	610	125	735	735	260	630	775	254	100	M24X50	210	160	28	90	16	355	49	1000	28	1570	25	445	740	680	800	24	6	M72X2
K355LM	2	610	125	735	735	260	630	875	254	75	M24X50	140	110	20	67.5	12	355	49	1000	28	1600	25	445	740	680	800	24	6	M72X2
K355*	4-8	610	125	735	735	260	630	875	254	100	M24X50	210	160	28	90	16	355	49	1000	28	1670	25	445	740	680	800	24	6	M72X2

1. The dimension of 'L' with tolerance +-5 for frame 80-132,tolerance +-8 for frame 160-355.

2. AC and L dimensions are the maximum external dimensions, and the details are subject to the confirmed drawings.

VALIADIS
HELLENIC MOTORS

K-Series - IE5

Dimensions Flange Mount B5& VI

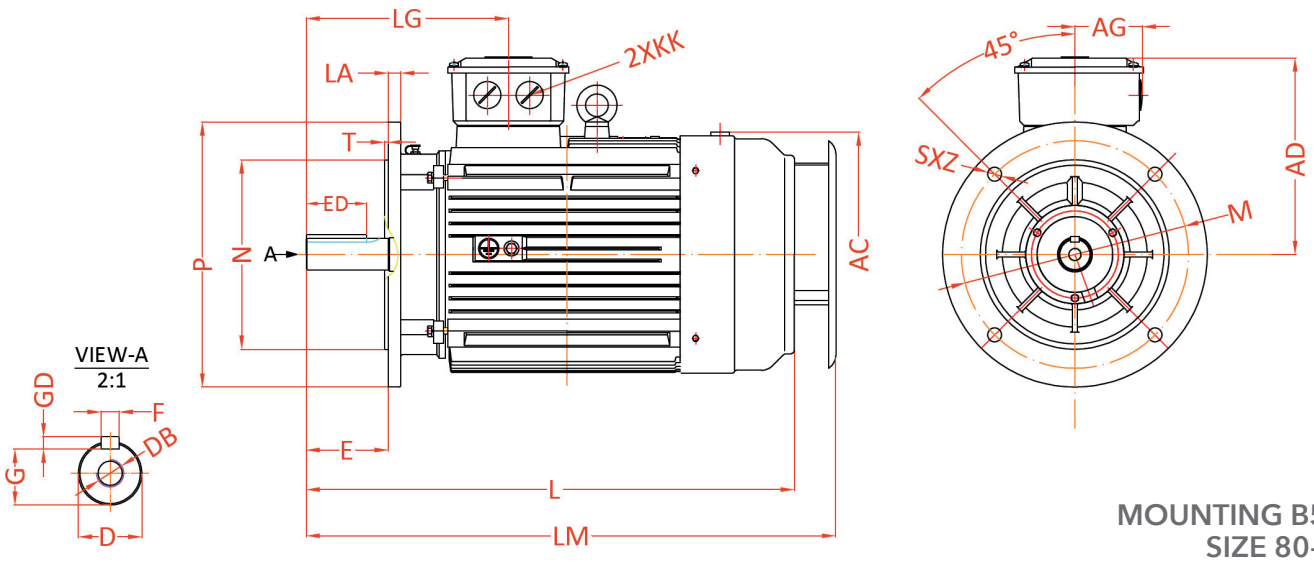

MOUNTING B5-V1
SIZE 80-355

FRAME	Poles	AC	D	AD	AG	DB	E	ED	F	G	GD	LA	LG	M	N	P	S	T	KK	L*	LM*
K80M	2-8	185	19	170	51	M6X16	40	22	6	15.5	6	14	115	165	130	200	12	3.5	M24X1.5	351	-
K90S	2-8	215	24	185	60	M8X19	50	32	8	20	7	12	129	165	130	200	12	3.5	M24X1.5	390	-
K90L	2-8	220	24	190	60	M8X19	50	32	8	20	7	12	129	165	130	200	12	3.5	M24X1.5	430	-
K100L	2-8	230	28	195	60	M10X22	60	40	8	24	7	14	147	215	180	250	14.5	4	M24X1.5	484	-
K112M	2-8	256	28	220	75	M10X22	60	40	8	24	7	12	144	215	180	250	14.5	4	M30X2	521	-
K132S	2-8	285	38	235	75	M12X28	80	56	10	33	8	14	250	265	230	300	14.5	4	M30X2	527	-
K132M	2-8	285	38	235	75	M12X28	80	56	10	33	8	14	250	265	230	300	14.5	4	M30X2	565	-
K160M	2-8	355	42	295	95	M16X36	110	80	12	37	8	15	270	300	250	350	18.5	5	M36X2	712	757
K160L	2-8	355	42	295	95	M16X36	110	80	12	37	8	15	270	300	250	350	18.5	5	M36X2	734	779
K180M	2-8	415	48	330	120	M16x36	110	80	14	42.5	9	15	288	300	250	350	18.5	5	M48x2	863	908
K180L	2-8	415	48	330	120	M16x36	110	80	14	42.5	9	15	288	300	250	350	18.5	5	M48x2	868	913
K200L	2-8	455	55	350	120	M20x42	110	90	16	49	10	17	298	350	300	400	18.5	5	M48x2	959	1034
K225S	4-8	510	60	550	160	M20x42	140	100	18	53	11	19	350	400	350	450	18.5	5	M64x2	1008	1083
K225M	2	510	55	550	160	M20x42	110	80	16	49	10	19	320	400	350	450	18.5	5	M64x2	988	1063
K225M	4-8	510	60	550	160	M20x42	140	100	18	53	11	19	350	400	350	450	18.5	5	M64x2	1018	1093
K250M	2	555	60	560	160	M20x42	140	100	18	53	11	22	350	500	450	550	18.5	5	M64x2	1071	1146
K250M	4-8	555	65	560	160	M20x42	140	100	18	58	11	22	350	500	450	550	18.5	5	M64x2	1071	1146
K280S	2	645	65	600	160	M20x42	140	100	18	58	11	22	350	500	450	550	18.5	5	M64x2	1098	1183
K280S	4-8	645	75	600	160	M20x42	140	100	20	67.5	12	22	350	500	450	550	18.5	5	M64x2	1112	1197
K280M	2	645	65	600	160	M20x42	140	100	18	58	11	22	350	500	450	550	18.5	5	M64x2	1118	1203
K280M	4-8	645	75	600	160	M20x42	140	100	20	67.5	12	22	350	500	450	550	18.5	5	M64x2	1132	1217
K315S	2	705	65	620	330	M20x42	140	100	18	58	11	24	387	600	550	660	24	6	M72x2	1539	1624
K315M	2	705	65	620	330	M20x42	140	100	18	58	11	24	387	600	550	660	24	6	M72x2	1539	1624
K315L	2	705	65	620	330	M20x42	140	100	18	58	11	24	387	600	550	660	24	6	M72x2	1539	1624
K315S	4-8	705	80	620	330	M20x42	170	130	22	71	14	24	417	600	550	660	24	6	M72x2	1612	1697
K315M	4-8	705	80	620	330	M20x42	170	130	22	71	14	24	417	600	550	660	24	6	M72x2	1612	1697
K315L	4-8	705	80	620	330	M20x42	170	130	22	71	14	24	417	600	550	660	24	6	M72x2	1612	1697
K355M(V1)	2	735	75	645	260	M24X50	140	110	20	67.5	12	25	415	740	680	800	24	6	M72X2	1600	1700
K355L(V1)	2	735	75	645	260	M24X50	140	110	20	67.5	12	25	415	740	680	800	24	6	M72X2	1490	1590
K355M(V1)	4-8	735	100	645	260	M24X50	210	160	28	90	16	25	445	740	680	800	24	6	M72X2	1670	1770
K355L(V1)	4-8	735	100	645	260	M24X50	210	160	28	90	16	25	445	740	680	800	24	6	M72X2	1570	1670
K355M	2	735	75	645	260	M24X50	140	110	20	67.5	12	25	415	740	680	800	24	6	M72X2	1600	1700
K355L»	4-8	735	100	645	260	M24X50	210	160	28	90	16	25	445	740	680	800	24	6	M72X2	1670	1770

1. The dimension of 'L' and 'LM' with tolerance+-5 for frame 80-132,tolerance+-8 for frame 160-355.

2. AC and L dimensions are the maximum external dimensions, and the details are subject to the confirmed drawings.

VALIADIS
HELLENIC MOTORS

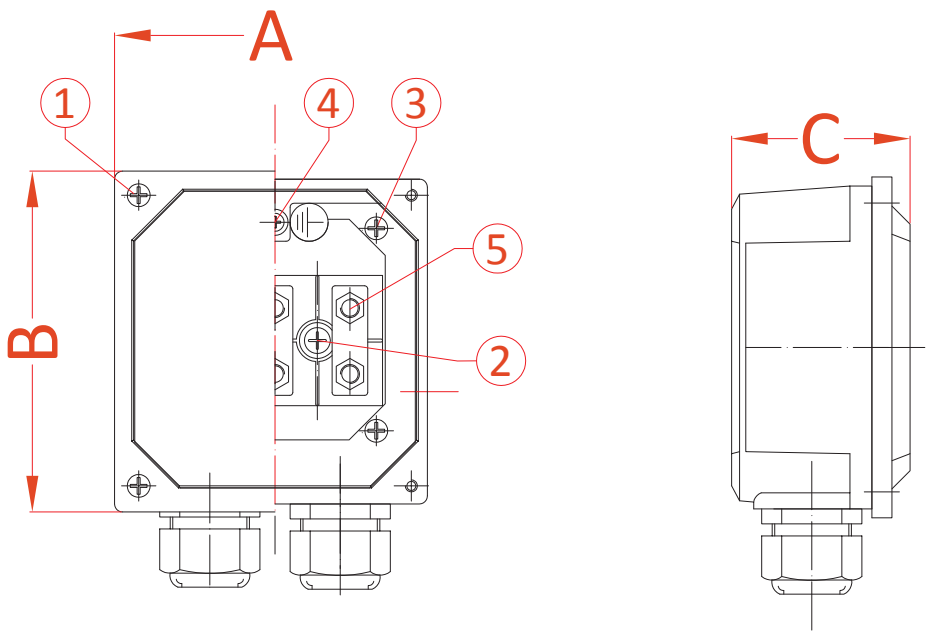

Top Terminal Box

FRAME	A	B	C	1	2	3	4	5	GLAND SIZE	OUTLET (dia).
K80	105	105	65	M5X16	M5X25	M5X16	M5X12	M4	M 24X1.5	Φ11
K90-100	113	113	72	M5X16	M5X25	M5X16	M5X12	M4	M 24X1.5	Φ11
K112-132	121	129	80	M5X16	M5X25	M5X20	M5X16	M5	2XM30X2	2XΦ15
K160	163	173	92	M6X16	M6X25	M6X16	M6X12	M6	2XM36X2	2XΦ25
K180-200	188	208	107	M8x25	M8x35	M8x25	M8x16	M8	2XM48x2	2XΦ36
K225-280	217	246	120	M8x25	M8x35	M8x25	M8x16	M10	2XM64x2	2XΦ51
K315-355	350	475	285	M12X30	M12X80	M12X30	M10X25	M20	2XM72X2	2XΦ52

Side Terminal Box

FRAME	A	B	C	1	2	3	4	5	GLAND SIZE	OUTLET (dia).
K80	95	95	56	M5X16	M5X25	M5X16	M5X12	M4	M24X1.5	Φ11
K90-100	105	109	56	M5X16	M5X25	M5X16	M5X12	M4	M24X1.5	Φ11
K112-132	117	125	65	M5X16	M5X25	M5X20	M5X16	M5	2XM30X2	2XΦ15
K160	155	177	87	M6X16	M6X25	M6X16	M6X12	M6	2XM36X2	2XΦ25
K180-200	176	212	107	M6X20	M8X35	M8X20	M8X16	M8	2XM48X2	2XΦ36
K225-280	212	248	115	M6X20	M8X35	M8X30	M8x16	M10	2XM64x2	2XΦ51
K315-355	340	410	275	M8X30	M12X40	M12X30	M10X25	M20	2XM72X2	2XΦ52

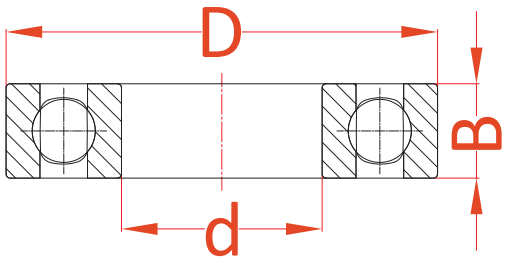

MOTOR TYPE	DE	NDE	d	D	B
K80	6204ZZ	6204ZZ	20	47	14
K90	6205ZZ	6205ZZ	25	52	15
K100	6206ZZ	6206ZZ	30	62	16
K112	6306ZZ	6306ZZ	30	72	19
K132	6308ZZ	6308ZZ	40	90	23
K160	6309	6309	45	100	25
K180	6311	6311	55	120	29
K200	6313	6313	65	140	33
K225	6314	6314	70	150	35
K250	6314	6314	70	150	35
K280-2P	6314	6314	70	150	35
K280-4-8P	6317	6317	85	180	41
K315-2P	6316	6316	80	170	39
K315-4-8P	6319	6319	95	200	45
K355-2P (B3,B35)	6319	6319	95	200	45
K355-2P (V1)	6319	7319	95	200	45
K355-4-8P (B3,B35)	6322	6322	110	240	50
K355-4-8P (V1)	6322	7322	110	240	50

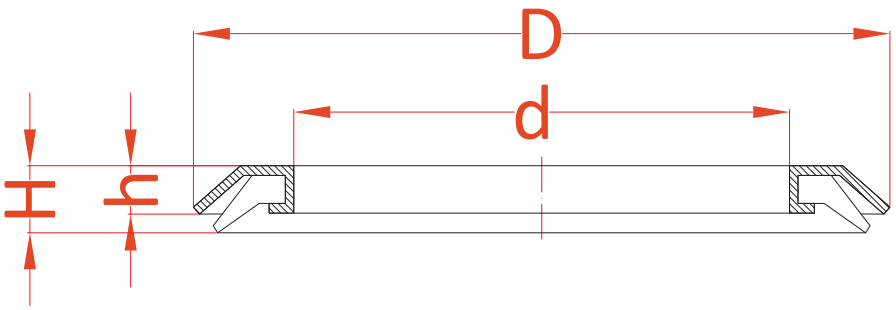

MOTOR TYPE	OIL SEAL SIZE	d	D	h	H
K80	RB20x35x4.0	Φ20	Φ35	3	6
K90	RB25x40x4.0	Φ25	Φ40	3	6
K100	RB30x47x4.5	Φ30	Φ47	3.5	6.5
K112	RB30x47x4.5	Φ30	Φ47	3.5	6.5
K132	RB40x57x4.5	Φ40	Φ57	3.5	6.5
K160	RB45x62x4.5	Φ45	Φ62	3.5	6.5
K180	RB55x75x5.5	Φ55	Φ75	4.5	6.5
K200	RB65x85x5.5	Φ65	Φ85	4.5	8
K225	RB70x90x5.5	Φ70	Φ90	4.5	8
K250	RB70x90x5.5	Φ70	Φ90	4.5	8
K280-2P	RB70x90x5.5	Φ70	Φ90	4.5	8
K280-4-8P	RB85x105x5.5	Φ85	Φ105	4.5	8
K315-2P	RB80x100x5.5	Φ80	Φ100	4.5	8
K315-4-8P	RB95x115x5.5	Φ95	Φ115	4.5	8

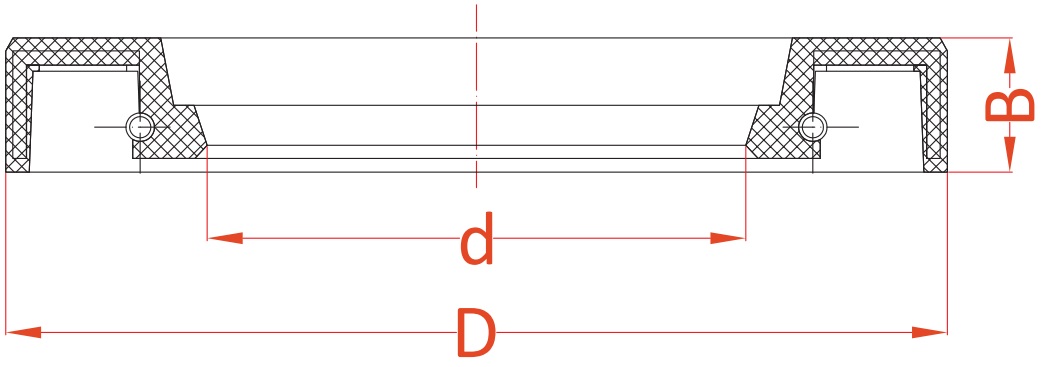

MOTOR TYPE	(N.D.E.)			(N.D.E.)		
	d	D	B	d	D	B
K80	20	35	5	20	35	5
K90	25	40	5	25	40	5
K100	30	52	7	30	52	7
K112	30	52	7	30	52	7
K132	40	62	5	40	62	5
K160	45	65	8	45	65	8
K180	55	75	8	55	75	8
K200	65	90	10	65	90	10
K225	70	95	10	70	95	10
K250	70	95	10	70	95	10
K280-2P	70	95	10	70	95	10
K280-4-8P	85	110	12	85	110	12
K315-2P	80	100	10	80	100	10
K315-4-8P	95	120	12	95	120	12
K355-2P	95	120	12	95	120	12
K355-4-8P	110	140	12	110	140	12

- *Motors are equipped with bearings from excellent manufacturers.!n general the bearings have C3 clearances.*
- *Motors of frame sizes 80-132 are fitted with closed bearings.*
- *Motors of frame sizes 160-355 are fitted with open bearings and regreasing device. Depending on the useful life of grease*
- *Open bearings must be regreased in good time so that the scheduled bearing service life is reached.*

VALIADIS
HELLENIC MOTORS

MOTOR TYPE	DE BEARIND	NDE BEARIND	Regreasing period hours for operating temperatures up to 70˚C			Quantity of grease in bearing chamber g
			n<3600r/min	n<1800r/min	n<1200r/min	
K160	6309	6309	6000	10000	16000	13
K180	6311	6311	4000	9000	14000	15
K200	6313	6313	3000	5500	8500	22
K225	6314	6314	2000	5000	8000	23
K250	6314	6314	2000	5000	8000	23
K280-2P	6314	6314	1200	-	-	30
K280-4-8P	6317	6317	-	4000	6000	35
K315-2P	6316	6316	1200	-	-	30
K315-4-8P	6319	6319	-	2000	3000	45
K355-2P (B3,B35)	6319	6319	-	-	-	30
K355-2P (V1)	6319	7319	1200	-	-	30
K355-4-8P (B3,B35)	6322	6322	-	1400	2200	60
K355-4-8P (V1)	6322	7322	-	1400	2200	60

- *Vertical motors should be greased twice as often as horizontal motors*
- *Regreasing time should be reduced if bearing operating temperature is in excess of 70˚C*

ATHENS: 18, Gr. Lambraki Str., 141 23 Likovrisi
Tel : +302102817217. Fax: +302102814277
THESSALONIKI: Industrial Area of Sindos., O.T. 48B, 15th Str., 570 22 Thessaloniki
Tel: +302310796646. Fax: +302310796645
e-mail: valiadis@valiadis.gr – web: www.valiadis.gr
BUCHAREST: 1, Aleea Meseriasilor, Bloc C93, Etaj 2, Ap.16, Sector 6, 061647-Bucharest, Romania
Tel : +40214135902. Fax: +40318156441, +40318165216
e-mail: romania@valiadis.gr – web: www.ac-motors.eu